Technical Guideline

Generating Plants Connected to the Medium-Voltage Network

Guideline for generating plants' connection to and parallel operation with the medium-voltage network

June 2008 issue

bdew

Energie. Wasser. Leben.

Technical Guideline

Generating plants connected to the medium-voltage network (Guideline for generating plants' connection to and parallel operation with the medium-voltage network)

In autumn 2007, the associations BGW, VDEW, VRE and VDN merged into the German association of energy and water industries (BDEW - Bundesverband der Energie- und Wasserwirtschaft e. V.).

Setting of technical rules that has been carried out to date within VDN will henceforth be realized by the Forum on Network Technology and Network Economy (FNN) within VDE. The foundation of FNN requires a rededication of this guideline in accordance with the rule-setting process of VDE-FNN application rules (for more detailed information see www.fnn@vde.com).

Energie. Wasser. Leben.

Reinhardtstraße 32, 10117 Berlin
phone: 030 / 300 199 - 0, fax: 030 / 300 199 - 3900
info@bdew.de, http://www.bdew.de

June 2008 issue

Introduction

The present guideline summarizes the essential aspects which have to be taken into consideration for the connection of generating plants to the network operator's medium-voltage network. Thus, they shall serve as a basis to the network operator and to the installer in the planning and decision-making process and provide important information on the plant operation to the observer.

This guideline complements that for low voltage and high and extra-high voltage which takes the particular characteristics of the different voltage levels individually into consideration. The distinction of the guidelines into voltage levels has turned out to be reasonable as the specific requirements are too disparate to be combined within one guideline.

The present guideline constitutes the third revised version of the VDEW guideline on „Generating plants connected to the medium-voltage network" („Eigenerzeugungsanlagen am Mittelspannungsnetz") and transposes the latter into a BDEW guideline. For the revision, account has been taken of the findings obtained from the elaboration of the guidelines on the connection of renewables-based plants to the high and extra-high voltage network, and the outline has been reorganized. Furthermore, the requirements under the Renewable Energy Sources Act (Erneuerbare-Energien-Gesetz – EEG) have been adequately taken into consideration.

Like at the high and extra-high voltage level, generating plants supplying medium-voltage networks will have to make a contribution to network support in the future. Therefore, in the event of failures they must not immediately be disconnected from the network as in the past and have also to make a contribution to voltage stability in the medium-voltage network during normal network operation. This has a direct impact on the plants' design. The present guideline summarizes the essential aspects which have to be taken into consideration for the connection to the medium-voltage network so as to maintain the security and reliability of network operation in accordance with the provisions of the Energy Industry Act in the light of a growing share of dispersed generating plants, and to enable the limit values of voltage quality determined in DIN EN 50160 to be observed.

Naturally, this guideline can only refer to the plants' usual conceptual design. For special construction lines, this guideline shall be applied analogously and by taking the given network structure into consideration.

The following persons cooperated in the Task Force charged with the elaboration of the Guideline by the Network Technology Steering Committee of VDN and BDEW, respectively:

Wolfgang Bartels, RWE WWE Netzservice GmbH, Recklinghausen

Frank Ehlers, E.ON Hanse AG, Quickborn

Kurt Heidenreich, Vattenfall Europe Distribution Hamburg GmbH

Ragnar Hüttner, *envia* Verteilnetz GmbH, Halle

Holger Kühn, E.ON Netz GmbH, Bayreuth

Tim Meyer, EnBW Regional AG, Stuttgart

Thomas Kumm, BDEW, Berlin

Jens-Michael Salzmann, E.ON e.dis AG, Demmin

Horst-Dieter Schäfer, EWE NETZ GmbH, Oldenburg

Karl-Heinz Weck, FGH, Mannheim

Translation: Edith Kammer-Strnad/BDEW

Contents

1 General principles

1.1 Scope of application

This guideline shall apply to the planning, construction, operation and modification of generating plants which are connected to a network operator’s medium-voltage network and operated in parallel with this network. It shall also apply if the network connection point of the generating plant is located in the low-voltage network, while the junction point with the public network is located in the medium-voltage network. This refers e.g. to generating plants connected to a low-voltage network which is linked with the network operator’s medium-voltage network through a separate customer transformer, and which no customers of public supply are connected to.

For generating plants whose network connection point is located in the medium-voltage network but whose junction point is located in the high or extra-high voltage network, the relevant technical connection rules shall be applied. For generating plants having both their network connection and their junction point in the low-voltage network, the VDEW guidelines on generating plants connected to the low-voltage network („Eigenerzeugungsanlagen am Niederspannungsnetz“) shall be applied[1].

Generating plants within the meaning of these guidelines are for instance

- wind energy plants
- hydro power plants
- cogeneration units (e.g. biomass, biogas or natural gas-fired power stations)
- photovoltaic plants

A generating plant may be composed of a single generator or of several generating units (e.g. wind farm). The electrical energy can be generated by synchronous or asynchronous generators with or without inverters or by direct-current generators (e.g. solar cells of photovoltaic plants) with inverters.

The requirements of this guideline can also be met by the connection of ancillary apparatuses (such as e.g. stabilizers, etc.) which are then an integral part of generating plants.

[1] currently under revision; soon available as Technical guideline on „Generating plants connected to the low-voltage network“, published by BDEW or VDE-FNN.

These ancillary apparatuses have to be taken into consideration for the connection and operation of generating plants as well as in the respective plant certificates.

The minimum power required for a connection to the medium-voltage network, and the maximum power up to which a connection to the medium-voltage network is possible depends on the type and operating regime of the generating plant and on the network operator's network conditions. For this reason, it is not possible to provide general information in this respect. This question can only be solved on a case-by-case basis through a network analysis carried out by the network operator.

Generally, this guideline is applicable to new generating plants to be connected to the medium-voltage network and to existing generating plants which are subjected to substantial modifications (e.g. re-powering). Except for requirements upon dynamic network support according to Section 2.5.1.2, which have to be observed from 1st January 2010, all requirements of this guideline need to be observed by generating plants as from January 1st, 2009. In both cases, the date at which the complete application documents according to Section 1.3 (exception: provisional solution for certificates according to Section 6.1) are available to the network operator shall be applicable. Existing generating units shall be subject to status quo protection.

1.2 Provisions and regulations

While taking account of the specifications and provisions in force, the generating plant is to be erected and operated in such a way that it is capable of parallel operation with the network operator's network, and inadmissible repercussions on the network or on other customer facilities are excluded. This implies inter alia that the agreed apparent connection power S_{AV} is not exceeded.

For the construction and operation of the electric facilities it is imperative to comply at least with

- applicable statutory and governmental provisions,
- applicable DIN EN standards and DIN VDE standards,
- the Ordinance on Industrial Safety and Health,
- labour protection and accident-prevention rules of the relevant employers' liability insurance association,
- the network operator's specifications and guidelines.

Connection the network shall be agreed with the network operator on a case-by-case basis during the planning phase prior to ordering of the different components. Planning, construction and connection of the generating plant to the system operator’s network shall be carried out by appropriate specialist firms. The system operator may demand modifications and completions to existing plants or to those under construction as far as this is required for secure and disturbance-free network operation.

1.3 Application procedure and connection-relevant documents

During the inquiry and the technical examination, and for the elaboration of the connection offer, relevant documents about the generating plant shall be submitted to the network operator. Apart from the application documents for transfer stations[2] , the following documents and information are required, for instance:

- Site plan showing the location and streets, the designation and borderlines of the site as well as the place where the connection facility and the generating units are to be installed (preferably on the scale of 1:10,000, inside built-up areas 1:1,000),
- Data sheet with the technical specifications of the generating plant, and relevant certificates (see sample pattern in Annexe F.1),
- Basic circuit diagram of the entire electrical installation with the data of the equipment used (a single-pole representation is sufficient), information about the customer’s own medium-voltage lines, cable lengths and switchgear, basic diagram of the generating plant’s protection equipment with settings; diagram showing where measured variables are registered and on which switching appliances the protection equipment is acting on,
- Information about the short-circuit current capability of equipment in the connection facility,
- Electric data of the customer transformer(s) used for network connection, i.e. rated capacity, transformation ratio, relative impedance voltage, connection symbol,
- Short-circuit current of the generating plant (incl. time-dependent evolution) at the point of transfer to the system operator’s network,

[2] Application documents according to the Technical Guideline on „Technical conditions of connection to the medium-voltage network“ of BDEW and of the network operator

- Description of the type and operation mode of the main engine, the generator and, where applicable, the converter and the kind of connection with the network by means of data sheets or inspection records,
- Verification of the electric characteristics according to Section 6 of this guideline (certification).

1.4 Initial start-up

A necessary prerequisite for initial start-up is a conformity declaration in which the connection owner confirms that the generating plant was designed in accordance with the provisions, standards and regulations given in Section 1.2 and pursuant to the present guideline.

The plant installer and the network operator shall agree in due time on the date of initial start-up of the connection facility by the network operator and on the date of initial parallel operation in accordance with the deadlines determined by the network operator, as well as on the initial start-up program required for correct implementation of the initial start-up.

The necessary technical and contractual documents shall be made available by the connection owner in good time prior to initial start-up.

Functional tests and acceptances for plant components and functions concerning the connection facility, shall be implemented according to the network operator’s requirements and in his presence. These include for instance:

- inspection of the plant;
- access to commissioning and test reports;
- comparison of the plant construction with the planning scheme;
- control of accessibility and disconnection function of the transfer switching device;
- comparison of the structure of the measuring device for accounting purposes with the contractual and technical requirements, and commissioning test of measuring devices;
- functional tests of the short-circuit protection and protective disconnection equipment at the transfer point;
- check-up of interfaces with the network operator (functional tests of control commands, measured values and status messages);
- check-up of the technical installation for the reduction of power injections
- check-up of the installation for monitoring of the agreed power injections

Initial start-up of the connection facility is implemented by the network operator up to the transfer point. Voltage switching-through into the connection facility shall be carried out by the plant operator.

Initial start-up of the generating units shall be implemented by the plant operator. The network operator will decide whether his presence is required for this purpose. Initial start-up implies a functional test of the disconnection protection equipment on the generating units. Initial start-up shall be documented in a report by the plant operator. The completed initial start-up records shall be filed at the plant operator’s premises for verification of the implemented inspections. The network operator shall receive a copy.

Even after commissioning of the generating plant, the network operator may require an inspection to check the compliance with electrical characteristics.

In well-founded exceptional cases, the observance of admissible limiting values with regard to network disturbances is to be verified through measurements by the plant operator.

2 Network connection

2.1 Principles for the determination of the network connection point

Generating plants shall be connected to the network at an appropriate point, the network connection point. On the basis of the documents mentioned in Section 1.3, the network operator shall determine the appropriate point of connection which ensures secure network operation taking the generating plant into consideration, and at which the requested power can be received and transferred. The decisive criterion for the assessment of the network connection is always the behaviour of the generating plant at the network connection point and within the network of public supply.

The requested feed-in power (active connection power P_A and maximum apparent power of the generating plant S_{Amax} or the agreed apparent connection power S_{AV}) is examined in technical terms by the network operator after the party to be connected has filed its application for connection to the network. To this end, the network operator will determine the appropriate network connection point. This examination is carried out for the public supply network taking the normal network topology into consideration. The network operator's freedom in terms of switching operations must not be restricted by the operation of the generating plant, in order to maintain the reliability of supply and ensure the implementation of maintenance work. If the agreed power is higher than the admissible power in an n-1 case, the output of the generating plant must be limited in an n-1 case or the plant must be completely disconnected. Usually, the generating plant itself is not connected to the public supply network in accordance with the n-1 security.

The assessment of the connection possibility under the aspect of network disturbances shall be based upon the network impedance at the junction point (short-circuit power, resonances), the connection power and the type and operation mode of the generating plant. If several generating plants are connected to the same medium-voltage network, their overall impact must be taken into consideration.

Examples of connections are given in Annex C.

2.2 Dimensioning of network equipment

Due to their operation mode, generating plants may cause higher loading of lines, transformers and other network equipment. Therefore, it is indispensable to examine the loading capacity of network equipment with regard to the connected generating plants according to the relevant dimensioning rules. In contrast to operating equipment supplying consumer fa-

cilities, continuous load (load factor = 1, instead of the frequently used utility load factor) must be anticipated here.

For the majority of generating plants, the maximum apparent power S_{Amax} can be used as a basis for the thermal loading of network equipment. It is obtained from the sum of the entire maximum active power P_{Emax} divided by the minimum power factor λ predetermined by the network operator at the network connection point:

$$S_{A\max} = \frac{\sum P_{E\max}}{\lambda} \qquad 2.2\text{-}1$$

Note: For generating units with special output restriction, the values related to the limited output are to be used.

For generating plants meeting the requirements described in Section 2.4.3 with regard to injected harmonic currents, the power factor λ is practically equal to the active factor cos φ of the fundamental current and voltage oscillations In practice, it is therefore usually sufficient to use the active factor instead of the power factor for the determination of the maximum apparent power:

$$S_{A\max} = \frac{\sum P_{E\max}}{\cos\varphi} \qquad 2.2\text{-}2$$

In the case of wind power plants, the maximum active power is applied over 600 seconds:

$$S_{A\max} = S_{A\max 600} = \frac{\sum (P_{nG} \cdot p_{600})}{\lambda} \quad \text{or} \qquad 2.2\text{-}3$$

$$S_{A\max} = S_{A\max 600} = \frac{\sum (P_{nG} \cdot p_{600})}{\cos\varphi} \qquad 2.2\text{-}4$$

where p_{600} can be taken from the inspection report according to the technical guidelines for wind power plants („Technische Richtlinie für Windenergieanlagen“) [3].

2.3 Admissible voltage changes

Under normal operating conditions of the network, the magnitude of the voltage changes caused by all generating plants with a point of connection to a medium-voltage network, must at no junction point within this network exceed a value of 2 % as compared to the voltage without generating plants.

$$\Delta u_a \leq 2\ \% \qquad (2.3\text{-}1)$$

Remarks:

- The generating plants with a point of connection in subordinated low-voltage network of this medium-voltage network shall be left out of account. The limiting values defined in the guidelines on "Generating plants connected to the low-voltage network" shall be applicable here.

- As specified by the network operator and, where applicable, in consideration of the possibilities of steady-state voltage control, exceptional cases may warrant a deviation from the 2 % value.

- As a function of the resulting active factor of all generating plants, the voltage change may become positive or negative, i.e. a voltage increase or decrease may occur.

- As the network transformer is normally equipped with an automatic voltage controller, the bus-bar voltage can be regarded as almost constant.

Voltage changes shall be determined preferably by means of complex load-flow calculations.

2.4 Network disturbances

2.4.1 Sudden voltage changes

Voltage changes at the junction point attributable to the connection and disconnection of generators or generating units do not give rise to inadmissible network disturbances if the maximum voltage change due to the switching operation at a generating unit does not exceed a value of 2 %, i.e. if

$$\Delta u_{max} \leq 2\ \% \ \text{(related to } U_c\text{)} \qquad (2.4.1\text{-}1)$$

and does not occur more frequently than once within 3 minutes (see explanations).

In the event of disconnection of one generating plant or of several plants simultaneously at one network connection point, the voltage change at every point in the network is limited to:

$$\Delta u_{max} \leq 5\ \% \qquad (2.4.1\text{-}2)$$

Note: It is important to take all <u>those</u> generating plants into consideration which may trip simultaneously as a result of operational disconnection and tripping by protection relays.

[3] Annexe B, „Technische Richtlinie für Windenergieanlagen“ Teil 3: Bestimmung der Elektrischen Eigenschaften – Netzverträglichkeit (EMV) -

For the disconnection of an entire generating plant, the resulting voltage change is calculated as the difference between voltages with and without injections, leaving the network transformers' voltage control out of account.

2.4.2 Long-term flicker

For the assessment of the connection of one or several generating plants at a junction point, the following long-term flicker strength has to be observed at the junction point with regard to flicker-effective voltage fluctuations due to operational reasons:

$$P_{lt} \leq 0.46 \qquad (2.4.2\text{-}1)$$

The long-term flicker strength P_{lt} of a generating unit can be estimated by means of its flicker coefficient c at:

$$P_{lt} = c \cdot \frac{S_{rE}}{S_{kV}} \qquad (2.4.2\text{-}2)$$

where S_{rE} = rated apparent power of the generating unit and c = flicker coefficient

Note: At the present time, the flicker coefficient is only known for wind energy plants and can be looked up in the inspection records of the technical guidelines for wind energy plants („Technische Richtlinie für Windenergieanlagen“ [4]. It is dependent on the network impedance angle ψ_k and on the average annual wind speed v_a.

In the case of a generating plant with several generating units, P_{lti} has to be calculated separately for each generating unit; on this basis, a resulting value has to be determined for the flicker interference factor at the junction point according to the following formula:

$$P_{ltres} = \sqrt{\sum_i P_{lt\,i}^2} \qquad (2.4.2\text{-}3)$$

For a generating plant consisting of n equal generating units, the resulting value of the flicker interference factor is as follows:

$$P_{lt\ res} = \sqrt{n} \cdot P_{lt\,E} \qquad = \sqrt{n} \cdot c \cdot \frac{S_{rE}}{S_{kV}} \qquad (2.4.2\text{-}4)$$

[4] Annex A, „Technische Richtlinie für Windenergieanlagen“ Teil 3: Bestimmung der Elektrischen Eigenschaften – Netzverträglichkeit (EMV) -

2.4.3 Harmonics and inter-harmonics

The currents of harmonics and inter-harmonics generated by generating units and generating plants shall be added to the certificates described in Section 6

If there is only one junction point in the medium-voltage network, the harmonic currents totally admissible at this junction point are obtained from the related harmonic currents $i_{\nu\ zul}$ of the table 2.4.3-1 multiplied by the short-circuit power at the junction point:

$$I_{\nu\ zul} = i_{\nu\ zul} \cdot S_{kV} \qquad (2.4.3\text{-}1)$$

If several plants are connected to this junction point, the above formula shall be used as a basis for the calculation of the admissible harmonic currents of a generating plant by multiplication with the ratio of the apparent connection power S_A of this plant to the total connectable or scheduled feed-in power S_{Gesamt} at the junction point under consideration:

$$I_{\nu\ Azul} = I_{\nu\ zul} \cdot \frac{S_A}{S_{Gesamt}} = i_{\nu\ zul} \cdot S_{kV} \cdot \frac{S_A}{S_{Gesamt}} \qquad (2.4.3\text{-}2)$$

For generating plants consisting of generating units of the same type, the following equation can be used: $S_A = \Sigma S_{rE}$. This shall apply here to wind energy plants as well. In the case of generating units of different types, this statement represents only a rough upper estimate.

For harmonics of odd ordinal numbers divisible by three, the values given in the table for the next higher odd ordinal number can be used as a basis unless a zero phase-sequence system of the current is fed into the network (with MV/LV network transformers normally used in the system operators' network, a zero phase-sequence system is not transmitted).

Ordinal number ν,μ	Admissible, related harmonic current $i_{\nu,\mu\ zul}$ in A/MVA		
	10 kV network	20 kV network	30 kV network
5	0.058	0.029	0.019
7	0.082	0.041	0.027
11	0.052	0.026	0.017
13	0.038	0.019	0.013
17	0.022	0.011	0.07
19	0.018	0.009	0.006
23	0.012	0.006	0.004
25	0.010	0.005	0.003
$25 < \nu < 40$ [1)]	$0.01 \times 25/\nu$	$0.005 \times 25/\nu$	$0.003 \times 25/\nu$
even-numbered	$0.06/\nu$	$0.03/\nu$	$0.02/\nu$
$\mu < 40$	$0.06/\mu$	$0.03/\mu$	$0.02/\mu$
$\mu,\nu > 40$ [2)]	$0.18/\mu$	$0.09/\mu$	$0.06/\mu$

Table 2.4.3-1 Admissible harmonic currents I_ν and inter-harmonic currents I_μ related to the network short-circuit power, which may be fed in total into the medium-voltage network.

1) odd-numbered

2) integral and non-integral within a range of 200 Hz. Measurement according to EN 61000-4-7, Annex B

With several junction points in a medium-voltage network, it is indispensable for the assessment of the conditions at one junction point to take all other junction points into consideration as well. Consequently, the conditions in a medium-voltage network are to be considered admissible if the harmonic current fed-in at every junction point does not exceed the following value:

$$I_{\nu\,zul} = i_{\nu\,zul} \cdot S_{kV} \cdot \frac{S_{Gesamt}}{S_{Netz}} \qquad (2.4.3\text{-}3)$$

The following formula shall apply to harmonics above the 13th order and to inter-harmonics:

$$I_{\nu,\mu\,zul} = i_{\nu,\mu\,zul} \cdot S_{kV} \cdot \sqrt{\frac{S_{Gesamt}}{S_{Netz}}} \qquad (2.4.3\text{-}4)$$

where S_{Gesamt} represents the sum of apparent feed-in power of all generating plants connected to this junction point and S_{Netz} the capacity of the feeding transformer within the network operator’s transformer substation. For inverters with intermediate direct current link and pulse frequencies of above 1 kHz, the formula 2.4.3-4 shall apply to harmonics above the 2nd order.

If the calculation shows that the admissible harmonic currents are exceeded, remedial measures need to be taken unless more precise calculations according to the „Technical Rules for the Assessment of Network Disturbances“ [5] allow to show that the admissible harmonic voltages in the network are not exceeded. Particular situations, such as e.g. the consideration of resonances, should be subject to a special analysis.

For other nominal network voltages than those given in the table, the related harmonic currents may be determined by means of conversion (inversely proportional to the voltage) from the values given in the table.

[5] „Technical Rules for the Assessment of Network Disturbances“, 2nd edition 2007, published by VDN

The observance of admissible back currents according to the equations 2.4.3-1 and 2.4.3-2 can be verified through measurement of the total current at the junction point or by calculation from the currents of the connected individual plants. The equations given in Annex B.2.4 shall be applied for the addition of harmonic currents from connected individual plants.

Harmonic currents shall be measured in accordance with 61000-4-7.

Note: The following approaches determined in the standard 61000-4-7 shall be applied:

- *in the case of harmonics: rms values of harmonic subgroups*
- *in the case of inter-harmonics: rms values of inter-harmonic centred subgroups.*

Harmonic currents which flow into the generating plant (e.g. into filter circuits) due to a distorted network voltage, are not assigned to the generating plant. The same shall apply if the generating plant works as an active harmonics filter and, due to its operating mode, brings about a continuous reduction of harmonic voltages existing in the network voltage. However, centralized multi-service control systems must not be inadmissibly affected (see Section 2.4.5).

2.4.4 Commutation notches

The relative depth of commutation notches d_{kom} through line-commutated inverters must not exceed the value of

$$d_{kom} = 2.5\ \% \qquad (2.4.4\text{-}1)$$

at the junction point in the most unfavourable condition ($d_{kom} = \Delta U_{kom} / \hat{U}_c$ with $\hat{U}_c$ = peak value of the agreed service voltage U_c).

2.4.5 Audio-frequency centralized ripple-control

Audio-frequency centralized ripple-control installations are usually operated at frequencies between approximately 100 and 1500 Hz. Information about the locally applied ripple-control frequency can be obtained from the network operator. Broadcasting levels of audio-frequency impulses are normally about 1 % to 4 % U_c.

Ripple-control installations are dimensioned for a loading that corresponds to the 50-Hz rated capacity of the supply network into which the control voltage is fed. Basically, generating plants may inadmissibly influence the ripple-control installations through additional load on the centralized ripple-control transmitting station or through an inadmissibly high reduction of the signal level in the system operator’s network.

As a matter of principle, the audio-frequency level caused by the operation of generating plants must not be reduced by more than 5 % at any point of the medium-voltage network as compared to the operation without generating plants; consumption and generation installations shall be taken into consideration according to their audio-frequency impedance.

With this reduction of the audio-frequency level by generating plants, it is necessary to take account of the fact that generating plants supplying the network through static inverters without filter circuits do normally not cause a substantial reduction of the ripple-control level. Where filter circuits or compensating capacitors exist, it is necessary to examine whether the short-circuit reactance of the customer transformer may give rise to a series resonance.

Apart from the limitation of the level reduction, it is not allowed to generate inadmissible interference voltages. The following rules shall apply in particular:

- The interference voltage caused by a generating plant whose frequency corresponds to the locally applied ripple-control frequency or is very close to it, must not exceed the value of 0.1 % U_c.
- The interference voltage caused by a generating plant whose frequency lies at the ambient frequencies of +/- 100 Hz to the locally applied ripple-control frequency or in its immediate proximity, must not exceed a value of 0.3 % U_c.

These limit values as well as further details are given in the guidelines on audio-frequency centralized ripple control („Tonfrequenz-Rundsteuerung“) [6].

Should a generating plant inadmissibly impair the operation of the centralized ripple-control facilities, the operator of the generating plant shall take appropriate remedial measures even if the impairment is noticed at a later date.

2.5 Behaviour of generating plants connected to the network

2.5.1 Principles of network support

During network feed-in, generating plants must be capable of participating in voltage control. A distinction is made between steady-state voltage control and dynamic network support.

2.5.1.1 Steady-state voltage control

Steady-state voltage control means voltage control within the medium-voltage network under normal operating conditions, where slow voltage changes in the distribution network are kept within acceptable limits.

If required by the network operator and to meet network requirements, generating plants must participate in steady-state voltage control within the medium-voltage network.

2.5.1.2 Dynamic network support

Dynamic network support means voltage control in the event of voltage drops within the high and extra-high voltage network with a view to avoiding unintentional disconnections of large feed-in power, and thus network collapse.

In the light of the strong increase in the number of generating plants to be connected to the medium-voltage network, the integration of these plants into the dynamic network support scheme is becoming ever more important. Consequently, these generating plants must generally participate in dynamic network support even if this is not required by the network operator at the time of the plant's connection to the network. That means that generating plants must be able in technical terms

- not to disconnect from the network in the event of network faults,
- to support the network voltage during a network fault by feeding a reactive current into the network,
- not to extract from the medium-voltage network after fault clearance more inductive reactive power than prior to the occurrence of the fault.

These requirements apply to all types of short circuits (i.e. to single-phase, two-phase and three-phase short circuits).

Just like in the Transmission Code 2007[7], a distinction is made in these guidelines between type-1 and type-2 generating plants with regard to their behaviour in the event of network disturbances. A type-1 generating unit exists if a synchronous generator is directly (only through the generator transformer) connected to the network. All other plants are type-2 generating units.

---

[6] „Tonfrequenz-Rundsteuerung, Empfehlung zur Vermeidung unzulässiger Rückwirkungen“, 3rd edition 1997, published by VDEW

[7] TransmissionCode 2007 „Network and System Rules of the German Transmission System Operators“, August 2007, published by VDN

Concerning type-1 plants, the Transmission Code 2007 is put more precisely in the following respect:

- If the voltage drops at values above the red border line in figure 2.5.1.2-1, generating plans must not be disconnected from the network.

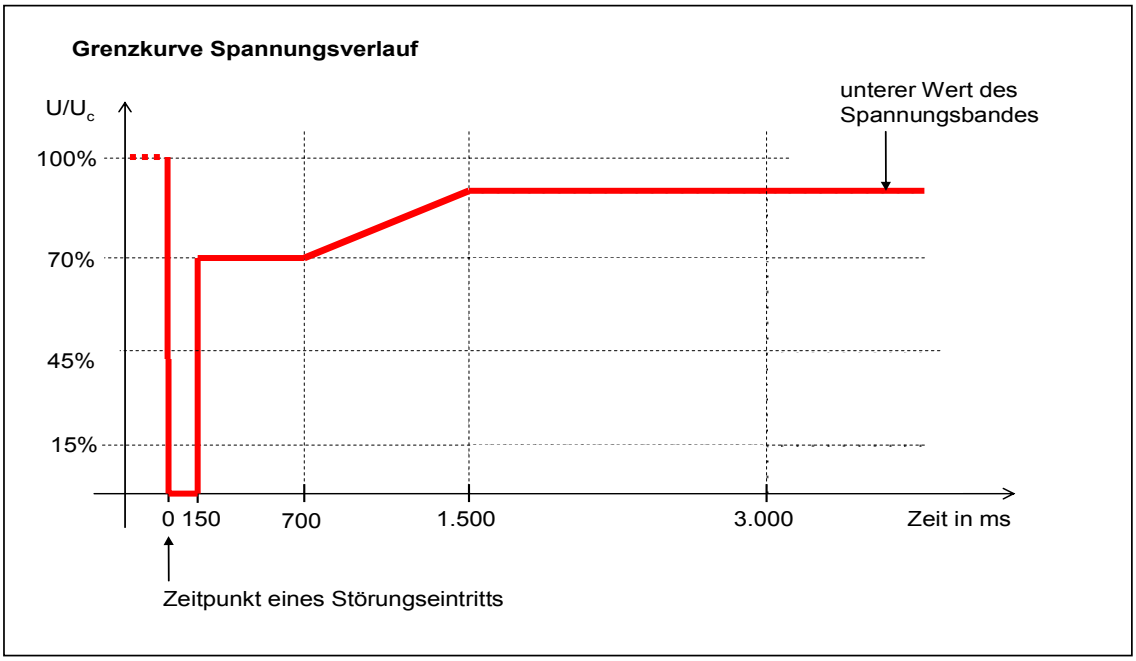

Figure 2.5.1.2-1: Borderline of the voltage profile at the network connection point of a type-1 generating plant

The following conditions shall apply to type-2 generating plants, taking the Transmission Code 2007, Section 3.3.13.5, into account:

- Generating units must not disconnect from the network in the event of voltage drops to 0 % U_c of a duration of ≤ 150 ms.
- Below the blue line shown in Figure 2.5.1.2-2, there are no requirements saying that generating plants have to remain connected to the network.

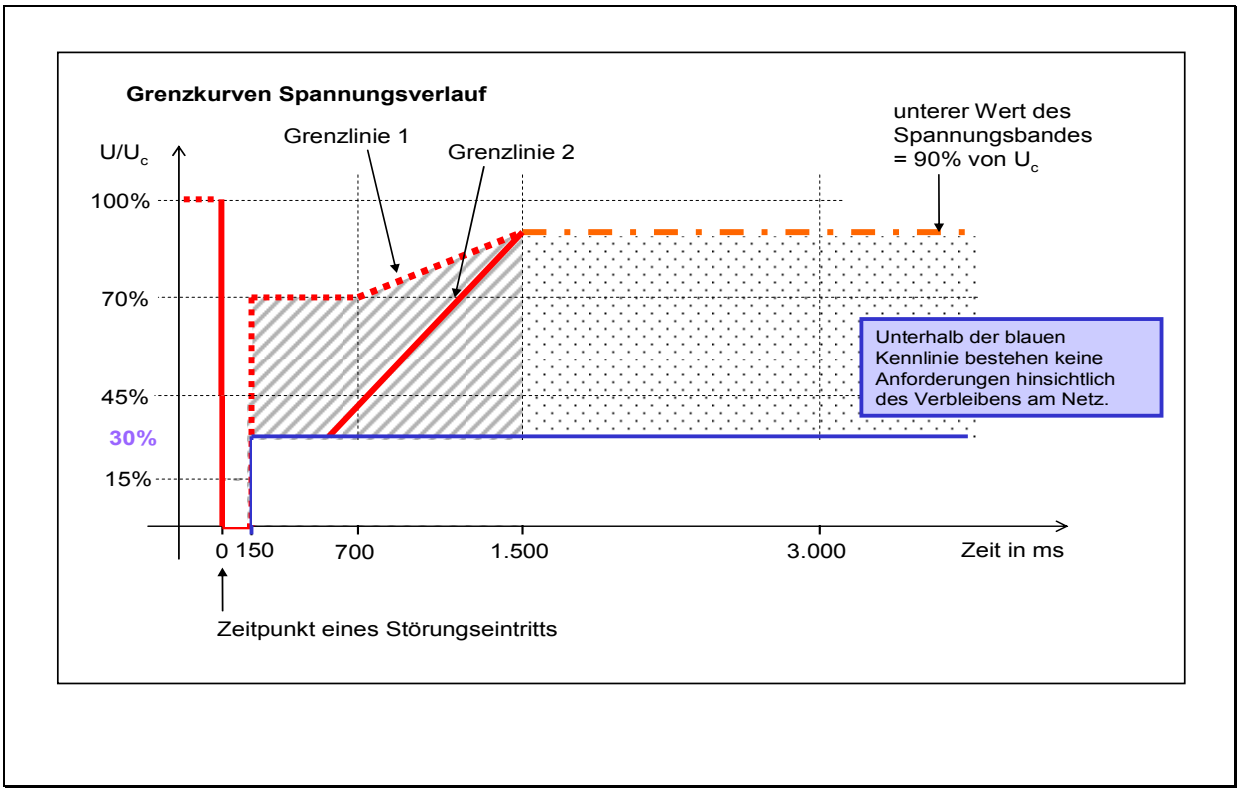

Figure 2.5.1.2-2 Borderlines of the voltage profile of a type-2 generating plant at the network connection point

Note: U means the lowest value of the three line-to-line voltages

Voltage drops with values above the borderline 1 must not lead to instability or to the disconnection of the generating plant from the network (TC2007; 3.3.13.5, section 13; extended to asymmetrical voltage drops).

If the voltage drops at values above the borderline 2 and below the borderline 1, generating units shall pass through the fault without disconnecting from the network. Feed-in of a short-circuit current during that time is to be agreed with the network operator. In consultation with the network operator, it is permissible to shift the borderline 2 if the generating plant’s connection concept requires to do so. Also in consultation with the network operator, a short-time disconnection from the network is permissible if the generating plant can be resynchronized 2 seconds, at the latest, after the beginning of the short-time disconnection. After resynchronization, the active power must be increased with a gradient of at least 10% of the nominal capacity per second (TC2007; 3.3.13.5, section 14).

Below the borderline 2, a short-time disconnection of the generating plant may be carried out in any case. Prolonged resynchronization times and lower gradients of the active power

increase after resynchronization as compared to those admissible above the borderline 2 are permitted if they are agreed with the network operator (TC2007, 3.3.13.5, section 15).

The behaviour of type-2 generating plants in the case of automatic re-closure is described more precisely in Annex B.3.

Depending on the concrete technical network conditions, the actual duration of the generating facility's connection to the medium-voltage network can be reduced by requirements of the network operator in terms of protection equipment.

For all generating plants, the rule shall apply that a current according to the Transmission Code 2007 is to be supplied to the network for the duration of a symmetrical fault. Concerning unsymmetrical faults, it is not permissible that during the duration of the fault reactive currents be fed into the network which give rise to voltages higher than 1,1 U_c in non-faulty phases at the network connection point.

As a matter of principle, the requirements in terms of dynamic network support apply to all facilities irrespective of their type and connection variant. They shall be implemented through setting of the generating plants' or units' control equipment.

The network operator shall determine the extent to which generating plants must participate in dynamic network support. A distinction is made between connections

- directly via a separate circuit breaker bay to the bus-bar of a transforming station and
- in the system operator's medium-voltage network.

A general basic requirement is however that all generating plants remain connected to the network in the case of voltage drops above the borderline in figure 2.5.1.2-1 or the borderline in figure 2.5.1.2-1. Consequently, the network operator only determines whether or to which extent a reactive current is to be supplied to the network by the generating facility in the event of voltage drops.

Customer plants with generating plants turning into isolated operation in the event of disturbances in the higher-voltage network to cover the customer's own energy demand must participate in network support until they are disconnected from the system operator's medium-voltage network. Isolated operation scheduled by the customer has to be agreed by contract with the network operator.

2.5.2 Maximum admissible short-circuit current

Due to the operation of a generating plant, the network’s short-circuit current is increased by the generating plant’s short-circuit current, particularly in the vicinity of the network connection point. Therefore, information about the anticipated short-circuit currents of the generating plant at the network connection point has to be provided together with the application for connection to the network.

To determine a generating plant’s short-circuit current contribution, the following rough values can be assumed:

- for synchronous generators: eight times the rated current
- for asynchronous generators and double-fed asynchronous generators: six times the rated current
- for generators with inverters: one time the rated current.

To ensure correct calculations, the impedances between the generator and the network connection point (customer transformer, lines, etc.) need to be taken into consideration.

If the generating plant gives rise to a short-circuit current increase in the medium-voltage network above the rated value, the network operator and the connection owner shall agree upon appropriate measures, such as limitation of the short-circuit current from the generating facility (e.g. by using I_s–limiters).

2.5.3 Active power output

It must be possible to operate the generating facility at reduced power output. In the cases listed below, the network operator is entitled to require a temporary limitation of the power feed-in or disconnect the facility:

- potential danger to secure system operation,
- congestion or risk of overload on the network operator’s network,
- risk of islanding,
- risk to the steady-state or dynamic network stability,
- rise in frequency endangering the system stability,
- repairs or implementation of construction measures,

- within the scope of generation management/ feed-in management/ network security management (see „Grundzüge zum Erzeugungsmanagement“ [8]).

The generating plants must be capable of reducing their active power at steps of maximally 10 % of the agreed active connection power. This power reduction must be possible in any operating condition and from any operating point to a target value given by the network operator. This target value is normally preset without steps or in steps, and corresponds to a percentage value related to the agreed active connection power P_{AV}. To date, target values of 100 % / 60 % / 30 % / 0 % have proven to be effective. The network operator shall not interfere in the control of the generating plants. He shall only be responsible for signalling.

The reduction of the power feed-in is carried out at the plant operator’s own responsibility. The reduction of the power output to the respective target value must be realized without delay, but within one minute, at the most. A reduction to the target value 10 % must be possible without automatic disconnection from the network; below 10 % of the agreed active connection power P_{AV}, the generating facility may disconnect from the network.

All generating units must reduce, while in operation, at a frequency of more than 50.2 Hz the instantaneous active power (at the time of request; value freeze) with a gradient of 40 % of the generator’s instantaneously available capacity per Hertz (see figure 2.5.3-1 „Active power reduction in the case of over-frequency“, taken from the Transmission Code 2007, Section 3.3.13.3, figure 1 ibid.).

The active power may be increased again only if the frequency returns to a value of $f \leq 50.05$ Hz, as long as the actual frequency does not exceed 50.2 Hz. The neutral zone must be below 10 mHz.

[8] „Grundzüge zum Erzeugungsmanagement zur Umsetzung des §4 Abs. 3 EEG (status: 27/02/2006)“, published by VDN

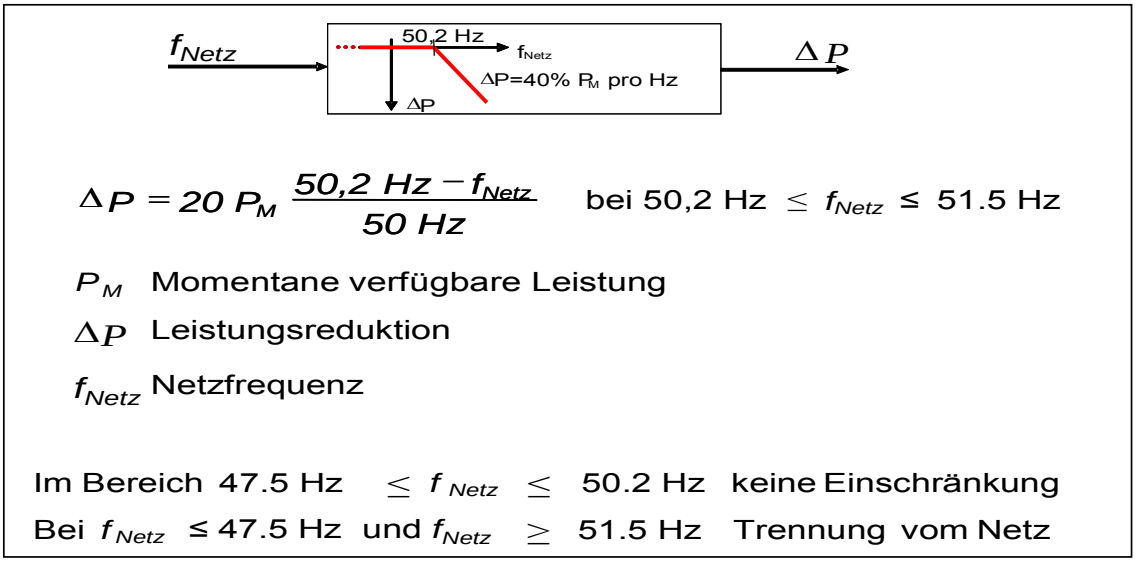

Bild 1 Wirkleistungsreduktion bei Überfrequenz

Figure 2.5.3-1: Active power reduction in the case of over-frequency (from Transmission Code 2007)

2.5.4 Reactive power

With active power output, it must be possible to operate the generating plant in any operating point with at least a reactive power output corresponding to a active factor at the network connection point of

$$\cos \varphi = 0.95_{underexcited} \text{ to } 0.95_{overexcited}$$

Values deviating from the above must be agreed upon by contract. In the consumer reference arrow system (see Annex B.4), that means operation in quadrant II (under-excited) or III (overexcited).

With active power output, either a fixed target value for reactive power provision or a target value variably adjustable by remote control (or other control technologies) will be specified by the network operator in the transfer station. The setting value is either

a) a fixed active factor cos φ or

b) a active factor cos φ (P) or

c) a fixed reactive power in MVar or

d) a reactive power/voltage characteristic Q(U).

The reactive power of the generating plant must be adjustable. It must be possible to pass through the agreed reactive power range within a few minutes and as often as required. If a characteristic is specified by the network operator, any reactive power value resulting from the characteristic must automatically adapt as follows:

- within 10 seconds for the cos φ (P)-characteristic and
- adjustable between 10 seconds and 1 minute for the Q(U)-characteristic (specified by the network operator).

Figure 2.5.4-1 shows an example of a cos φ (P)-characteristic.

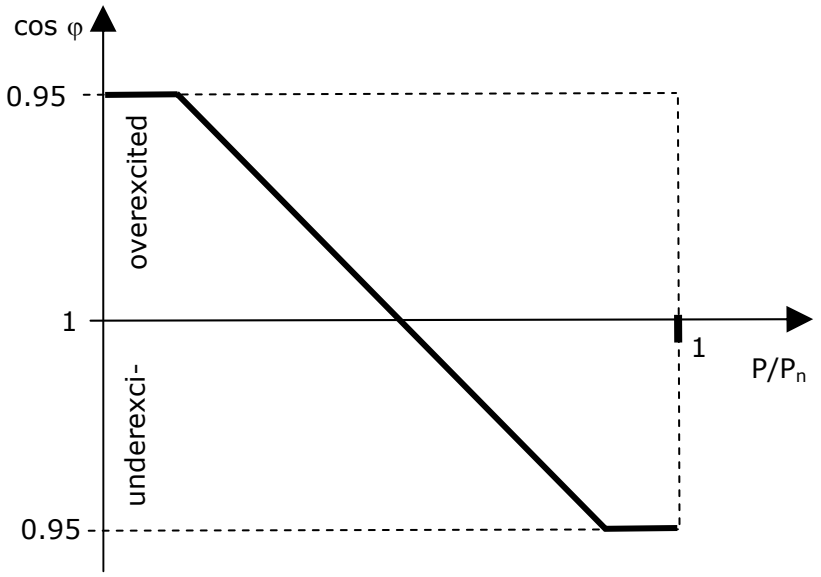

Figure 2.5.4-1: Example of a φ (P)-characteristic

With a view to avoiding voltage jumps in the event of fluctuations in active power feed-in, it is advisable to choose a characteristic with continuous profile and limited gradient.

Both the chosen approach and the target values shall be determined individually for every generating facility by the network operator. The specification can be based on

- the agreement of a value or, where applicable, of a schedule
- online presetting of target values

In the case of online presetting of target values, the new specifications for the working point of reactive power exchange shall be implemented at the network connection point after one minute, at the latest.

3 Plant design

3.1 Primary technology

3.1.1 Connection facility

The connection of the generating plant or of the customer facility with a generating plant to the system operator’s network is realized by means of a connection facility (see Annex A, Graphic representation “Definitions”). This Section describes the technical and organizational principles relating to the connection facility. Details in this respect are stipulated between the network operator and the operator of the generating plant.

For the installation of the connection facility, the following provisions and guidelines need to be observed: BDEW Guidelines on „Technical conditions for connection to the medium-voltage network“ [9], the connection requirements defined by the network operators and the general provisions concerning medium-voltage facilities (in particular those of DIN VDE 0101, DIN VDE 0670 and DIN VDE 0671).

Electrical installations must be designed, constructed and erected in such a way that they reliably withstand mechanical and thermal effects of a short-circuit current. The connection owner shall furnish proof of the short-circuit current capability for the entire connection facility.

The network operator shall specify the necessary parameters for the connection facility’s dimensioning at the network connection point (e.g. rated voltages and rated short-time current). Furthermore, the network operator shall make the following data available to the connection owner upon request for the dimensioning of the connection owner’s own protection equipment and for analyses concerning network disturbances:

- initial symmetrical short-circuit current from the network operator’s network at the network point of connection (without the contribution of the generating facility)
- fault clearing time of the main protection from the network operator’s network at the network point of connection

[9] See Technical Guidelines on „Technical conditions for connection to the medium-voltage network“, published by BDEW.

3.1.2 Transfer switchgear

The connection of the generating plant is realized through transfer switchgear. The latter must be accessible at any time to the network operator’s staff and, as switching point, it must be provided at least with load switching capability and a disconnection function. It is normally located in a transfer station. The design of the entire transfer station is based on the requirements of the Technical Guidelines on „Technical conditions for connection to the medium-voltage level“ published by BDEW and on the connection requirements defined by the network operator.

The layout of the isolating point that must be accessible to the network operator at any time, depends on the type of construction as well as on the ownership structure and operating regime within the transfer station. Full particulars shall be stipulated in an agreement concluded between the network operator and the connection owner.

With a view to avoiding that faults occurring in the customer’s own medium-voltage network give rise to disturbances in the network operator’s network, protection equipment shall be installed in the transfer station by which the faulty network or the entire transfer station is automatically disconnected. The protective device must adjusted so as to function selectively with the remaining disconnection facilities in the network operator’s network. A circuit breaker is required for large-capacity (from about 1 MVA) generating plants.

For the dimensioning of switchgear, short-circuit currents from the network operator’s network and from generating plants shall be taken into consideration.

3.1.3 Coupling switches

For the connection of the generating facility to the network operator’s network or to the remaining customer facility, it is necessary to use a coupling switch with at least power switching capability on which the protective devices according to Section 3.2.3 are effective.

Suitable means are e.g.:

- circuit-breakers,
- fuse load-break switches,
- motor-protection circuit breakers,
- fuse-safe contactor with power switching capability and upstream short-circuit protective device.

The coupling switch must ensure a three-phase galvanic isolation.

Note: As far fuse load-break switches are concerned, also the response of a fuse must lead to a three-phase disconnection.

Either a circuit-breaker connecting the entire customer facility with the network or a circuit-breaker connecting the generating unit with the remainder of the customer facility can be used as coupling switch. This coupling switch can be both on the low-voltage and on the medium-voltage side. Where no isolated operation is scheduled, the generator's switchgear can be used for this purpose.

As far as generating plants with inverters are concerned, the coupling switch shall be provided on the network side of the inverter. If this switch is accommodated within the inverter casing, its switching function must not be adversely affected by a short-circuit within the inverter.

The coupling switch must be designed for the maximum short-circuit current occurring at the place of installation (see Section3.1.1) and must be releasable without delay and with due regard to the necessary protective equipment according to Section 3.2.3. When dimensioning the coupling switch, account has to be taken of the fact that the short circuit in the case of fault can be fed both from the network operator's network and from generating plants.

Where safety fuses are used as short-circuit protection to low-voltage generators, the breaking capacity of the coupling switch shall be dimensioned at least in accordance with the responding range of the upstream safety fuse.

Concerning generating plants which are not capable of isolated operation, the generator circuit breaker can be used for coupling and synchronization, i.e. as coupling switch, and for disconnection in the case of tripping by protection devices according to Section 3.2.3.

Where plants capable of isolated operation are concerned (see connection examples in Annex C) a synchronizable coupling switch shall serve the disconnection of the generating plant in the event of tripping by protection devices according to Section 3.2.3. The synchronizable coupling switch is to be located between the transfer switching facility according to Section 3.1.2 and the customer facility to be operated in isolated operation. In this case, the generator circuit breaker shall only assume the function of protection of the generator itself, and is activated for this purpose by the generator protection devices.

The function of coupling and synchronization of the generating plant with the network operator's network shall be stipulated by contract within the scope of operational management.

Examples of connection facilities are given in Annex C.

3.1.4 Locking devices

Interlocking of switching devices shall be designed in accordance with VDE standards (series of standards VDE 0670/0671) and according to the requirements of the network operator. Plant-specific locking devices have to be adequately taken into consideration The locking device must be operative under remote control conditions of the facility and in the case of operation on the spot.

As a matter of principle, control of the switching devices of the medium-voltage transfer station must be designed in such a way that operation of the switching devices according to DIN VDE 0105 is ensured even in the event of loss of locking and control components (in particular, protection against arcing faults).

3.2 Secondary technical equipment

Apart from the requirements described below, the guidelines on „Technical conditions for connection to the medium-voltage network“ [10] and specific technical connection requirements of the network operator need to be observed for the installation and operation of secondary technical equipment.

The place for the network operator’s equipment required for the connection of the generating plant (e.g. secondary technical equipment) is made available by the connection owner.

3.2.1 Remote control

For secure network operation, it is necessary to include the generating plant into the network operator’s remote control scheme on request of the network operator, such as for example: control of the circuit breaker (in particular opening of the circuit breaker in case of critical network conditions – „remote switch-off“), limitation of active power production, provision of reactive power. On the basis of the network operator’s applicable remote control concepts, the necessary data and information required for system operation management shall be made available by the connection owner for processing in the control and communication system in the transformer substation (in the case of connections to the network operator’s bus-bar) or in the transfer station.

Connection facilities with remote control are equipped with remote / local change-over switches preventing remote control signals in the case of local control.

[10] See Technical Guidelines on „Technical conditions for connection to the medium-voltage network“, published by BDEW.

3.2.2 Auxiliary energy supply

The connection facility must be equipped with auxiliary energy supply. Should the function of protection equipment or tripping of switching devices require an auxiliary voltage source, auxiliary energy supply that is independent of the network voltage must be additionally available (e. g. battery, condenser, current transducer). Where applicable, remote control must also be equipped with a network-independent auxiliary energy source.

If auxiliary energy supply is required over a longer period of time, its capacity must be dimensioned so as to enable the connection facility in the event of a loss of network voltage to be operated for at least eight hours with all protection, secondary and auxiliary equipment. Direct-voltage circuits are to be operated in a free-of-ground manner, and subjected to earth-fault monitoring. Auxiliary service and auxiliary energy for secondary technical facilities of the network operator shall be made available by the connection owner.

The functional efficiency of auxiliary energy supply is to be permanently ensured by means of appropriate measures; furthermore, it is to be verified at regular intervals and documented through inspection records.

3.2.3 Protection equipment

3.2.3.1 General

Protection equipment is of considerable importance for secure and reliable operation of networks, connection facilities and generating plants. According to DIN VDE 0101, automatic installations must be provided for short-circuit clearing in electric facilities. The plant operator is responsible himself for the reliable protection of his plants (e.g. short-circuit, earth-fault and overload protection, protection from electric shock, etc.). To this end, the plant operator must install an adequate amount of protection equipment. For plants capable of isolated operation, these protection measures need to be guaranteed for isolated operation as well.

The responsibility for the concept and settings of the protection equipment shall lie with the partner for whose operating facilities the protective devices represent the main protection. The responsibility for correct operation of the protection equipment rests with the operator of the protection equipment. Concepts and protection settings at the interfaces between the network operator and the plant operator/connection owner shall be implemented on the basis of this Guideline in such a way that a danger to adjoining networks and plants can be excluded.

The setting values for protective disconnection devices given in this Guideline are reference values. It can be assumed that the sum of the inherent response time of the protection de-

vice and the switching device does not exceed 100 ms. Where applicable, it may be necessary to make an adjustment. Furthermore, an adjustment may also be required depending on the plant or network configuration. These values shall then be specified by the network operator.

Essential modifications to the protection equipment (protective disconnection devices, short-circuit protection device at the transfer point) or their set point shall be agreed in due time between the network operator and the plant operator. If required, the network operator may specify different setting values for the protection devices at a later date.

The network operator shall determine whether and which protection devices are to be sealed or otherwise protected against alterations.

The network operator is entitled to install or have installed devices at the transfer point which automatically disconnect the generating plant from the network if the predetermined limits compatible with the network (such as the agreed connection power S_{AV} or the maximum apparent power of a generating plant S_{Amax}) are exceeded in steady-state operation.

To ensure continuous secure operation, protection systems shall be inspected prior to commissioning and at regular intervals. The implementation of protection inspections and their results shall be documented by means of inspection records and submitted to the network operator on demand.

For protection inspections, it is recommended using installations like e.g. test terminals or test sockets to enable inspections to be carried out without disconnection of wires. A relevant example is given in Section 3.2.4.

It must be possible to make the adjusted values easily readable without using any additional means. This applies as well to protection functions integrated into the plant control system.

Protection equipment to be connected to transformers at the voltage level of the network connection, must satisfy the VDN guidelines for digital protection systems („Richtlinie für digitale Schutzsysteme“) [11].

Voltage protection devices for the protection against disconnection must be carried out in a three-phase design. For measurements at the medium-voltage level, the voltage shall be measured between the outer conductors. This ensures that the generating plant is not disconnected by the protection equipment in the case of a stationary earth fault in an isolated or resonant-earthed medium-voltage network. For measurements at the low-voltage level, the measurement shall be carried out between the outer conductor and the neutral point in

the case of Dy generator transformers, and between the outer conductors in the case of Yd generator transformers.

The three measuring elements of a voltage protection device shall be linked through a logical OR connection. Logical OR connection means that

- if the response value is exceeded in one measuring voltage, this leads to the response of the rise-in-voltage protection relays;
- if the response value is undershot in one measuring voltage, this leads to the response of the under-voltage protection relays.

On the other hand, the three measuring elements of the reactive power under-voltage protection $Q_{\rightarrow}$ & $U<$ (see Section 3.2.3.2) shall be linked through a logical AND connection. That means for the under-voltage protection relay that all measuring voltages have to be fallen below the response value to activate the response of the relay.

If there is no logical connection of the three measuring elements given in the text below, the connection in question is always a logical OR function.

The reset ratio of the rise-in-voltage protection devices must not fall below 0.98, that of the under-voltage protection devices must not exceed a value of 1.02.

Voltage protection devices for protection against disconnection should analyse the half-oscillation rms value, the analysis of the 50 Hz fundamental oscillation being sufficient.

Fall-in-frequency and rise-in-frequency protection relays may be designed as single-phase equipment. The voltage between two outer conductors shall be selected as measuring variable.

At frequencies between 47.5 Hz and 51.5 Hz, automatic disconnection from the network is not permissible due to the frequency deviation, unless different values are specified by the network operator. This is for instance the case if the generating unit is located within a load-shedding area of the 5-step-plan [12]. However, if the frequency falls below 47.5 Hz or exceeds the value of 51.5 Hz, the unit must be immediately disconnected automatically from the network.

After clearing of a fault in the network operator’s network or in the case of automatic reclosure, the plant operator must be prepared that the recovery voltage at the network connection point may be asynchronous to the voltage of the generating plant. The plant opera-

[11] „Richtlinie für digitale Schutzsysteme“, 1st edition November 2003, published by VDN

[12] Transmission Code 2007 „Network and System Rules of the German Transmission System Operators“, August 2007, published by VDN

tor himself must take care that switching operations, voltage fluctuations, automatic reclosure, or other processes taking place in the network operator’s network do not cause damage to his facilities.

The connection owner shall be responsible for the protection of the generating plant or the generating units, respectively (guarantee of intrinsic protection). Consequently, the protection concept described in this Guideline needs to be adequately extended by the owner of the generating plant connection. However, intrinsic protection must not undermine the requirements described in this Guideline regarding steady-state voltage control and dynamic network support of the generating plant or the generating units. As from 01st January 2010, it is no longer permissible to use vector surge relays in newly erected generating plants or generating units (see Section 1.1; the date of filing the application shall be applicable).

3.2.3.2 Protective disconnection devices

The function of protective disconnection devices described here is to disconnect the generating plant or the generating units from the network in the event of disturbed operating conditions in order to protect the generating plant and other customer facilities connected to the network. Examples are network faults, islanding, or a slow build-up of the network voltage after a fault in the transmission system. The plant operator is responsible himself for a reliable protection of his plants.

Protective disconnection can be realized within a self-sufficient device and within the control system of the generating unit. The loss of the auxiliary voltage of the protection equipment or of the plant’s control system must lead to an instantaneous tripping of the switch. Tripping through integrated protection relays must not be inadmissibly delayed by other functions of the control system.

Protective disconnection devices are installed at the transfer point and/or at the generating units. The protective disconnection devices at the generating units can be connected on the high or on the low-voltage side of the generator transformer. The following figures and connection examples show the protective disconnection equipment on the low-voltage side of the generator transformer. Equal recommendations on adjustment shall apply irrespective of the connection of the protective disconnection devices to the generating unit.

The following functions of the protective disconnection equipment shall be realized:

1. under-voltage protection U< und U<<
2. rise-in-voltage protection U> und U>>
3. under-frequency protection f<
4. rise-in-frequency protection f>
5. reactive power under-voltage protection $Q_{\rightarrow}$ & $U<$

Through the *reactive power under-voltage protection ($Q_{\rightarrow}$ & U<)* the generating plant is disconnected from the network after 0.5 s, if all three line-to-line voltages at the network point of connection are below 0.85 U_c (logical AND connection) and if the generating plant simultaneously extracts inductive reactive power from the network operator's network. It is expedient to use the positive sequence component for the determination of the reactive power.

This protection serves to monitor the behaviour of the generating plant satisfying the system needs after a fault in the network. Generating plants impeding the restoration of the network voltage through absorption of reactive power from the network or due to a lack of voltage support, are disconnected from the network prior to achieving the last stage time of the network protection equipment.

The extent of the necessary protective disconnection devices depends on whether the generating plant is to participate in dynamic network support. This extent will be determined by the network operator.

3.2.3.3 Connection of a generating plant to the bus-bar of a transformer station Short-circuit protection

Short-circuit protection of the generating plant is required for clearing of short-circuits in the connection facility. In addition, it serves as back-up protection in the event of faults within the generating units and in the network operator's network. A distance relay with V-I starting function or a definite time-delay over-current protection relay shall be provided as short-circuit protection.

The short-circuit protection devices of the plant operator must be integrated into the overall protection concept of the network operator. For this reason, the protection scheme shall be agreed with the network operator at the stage of planning. The protection equipment settings are specified by the network operator as far as they have an impact on his network. The short-circuit protection devices act upon the circuit breaker at the transfer point.

Note: Clearing of short-circuits in the 110 kV network requires the installation of line protection devices. For this purpose, the network operator normally uses distance protection relays on the 110 kV side and, if required, signal comparison devices, inter-tripping or under-voltage relays. The OFF signal of the network operator's line protection equipment acts upon the relevant circuit breaker of the connected generating plant (see figure 3.2.3.3-1) for transformer stations with spur connection.

3.2.3.4 Protective disconnection devices

The following devices are required as primary protective disconnection equipment at the **transfer point**:

- reactive power / under-voltage protection $Q_{\rightarrow}$ & U<
- rise-in-voltage protection U>> and U>
- under-voltage protection U<

The protective disconnection devices act upon the circuit breaker at the transfer point or on the coupling switch. Where necessary, a rise-in-frequency or under-frequency protection device is to be installed in the protective disconnection equipment at the transfer point.

Note on the reactive power / under-voltage protection: Concerning customer facilities with power intake and generating units, only the reactive power intake of the generating units through the reactive power under-voltage protection (Q-U<) shall be assessed in the event of voltage drops occurring in the higher-voltage network. The function of voltage protection devices is to protect customer facilities against inadmissible voltage conditions in the case of isolated operation, and to ensure a disconnection of the generating plant after faults occurring in the network. For this reason, under-voltage protection devices must also respond to asymmetrical faults. Therefore, the opening instructions of the three measuring elements of the under-voltage protection devices shall be in a logical OR connection.

The following settings are recommended as basic parameterization at the network connection point:

Function	***Setting range of the protection relay***	***recommended settings of protection relays***	
rise-in-voltage protection U>>	1.00 – 1.30 U_n	1.15 U_c	≤ 100 ms
rise-in-voltage protection U>	1.00 – 1.30 U_n	1.08 U_c *)	1 min
under-voltage protection U<	0.10 – 1.00 U_n	0.8 U_c	2.7 s
reactive power / under-voltage protection *($Q_{\rightarrow}$ & U<)*	0.70 – 1.00 U_n	0.85 U_c	t = 0.5 s

Table 3.2.3.3-1 Recommended settings of protection equipment at the network point of connection of a generating plant for connection to the bus-bar of a transformer station.

Notes: The settings relate to the agreed voltage U_c in the medium-voltage network. They have to be converted to the secondary voltage in accordance with the transformer ratios. U_n is the secondary nominal transformer voltage and thus the reference voltage of the protection equipment. Consideration is to be given to the fact that opening times are obtained from the sum of setting times and inherent response times of the switching and protection device.

**) Values higher than 1.1U_c should not be set with respect to the adherence to the voltage quality.*

The following protection equipment is required at the **generating units**:

- rise-in-voltage protection U>>
- under-voltage protection U< and U<<
- rise-in-frequency protection f>
- under-frequency protection f<

These protective disconnection devices shall be connected on the high or low-voltage side of the generator transformer.

The following settings are recommended as basic parameterization of the generating units' protection equipment:

Function	**Setting range of the protection relay**	**Recommended settings of protection relays**	
Rise-in-voltage protection U>>	1.00 – 1.30 U_n	1.20 U_{NS}	≤ 100 ms
Under-voltage protection U<	0.10 – 1.00 U_n	0.80 U_{NS} *	1.5 – 2.4 s **)
Under-voltage protection U<<	0.10 – 1.00 U_n	0.45 U_{NS} *	300 ms
Rise-in-frequency protection f>	50.0 – 52.0 Hz	51.5 Hz	≤ 100 ms
Under-frequency protection f<	47.5 – 50 Hz	47.5 Hz	≤ 100 ms

Table 3.2.3.3-2 Recommended settings for protection equipment at the generating unit when the generating plant is connected to the busbar of a transformer station

Notes: U_n is the secondary nominal voltage of the transformer and thus the protection equipment's reference voltage.

U_{NS} is the voltage on the low-voltage side of the generator transformer of the generating unit (U_{NS} = U_c / ü with ü = transformation ratio of the generator transformer). Consideration is to be given to the fact that opening times are obtained from the sum of setting times and inherent response times of the switching and protection device.

** If this value is set, the requirements described in Section 2.5.1.2 are considered to be satisfied.*

Taking the impedances of the connection facility of the generator transformers into account, the settings for the under-voltage protection devices U<< at the generating units are obtained in a simplified manner at 45 %.

***) Response times are determined by the network operator. Usually, one fourth of the generating plants per high-voltage network shall be disconnected from the network after 1.5 s and another fourth after 1.8 s, 2, 1s and 2.4 s, respectively.*

The figure below shows the protection concept at the network connection point and within the generating units for the connection of generating plants to the bus-bar of a transformer station.

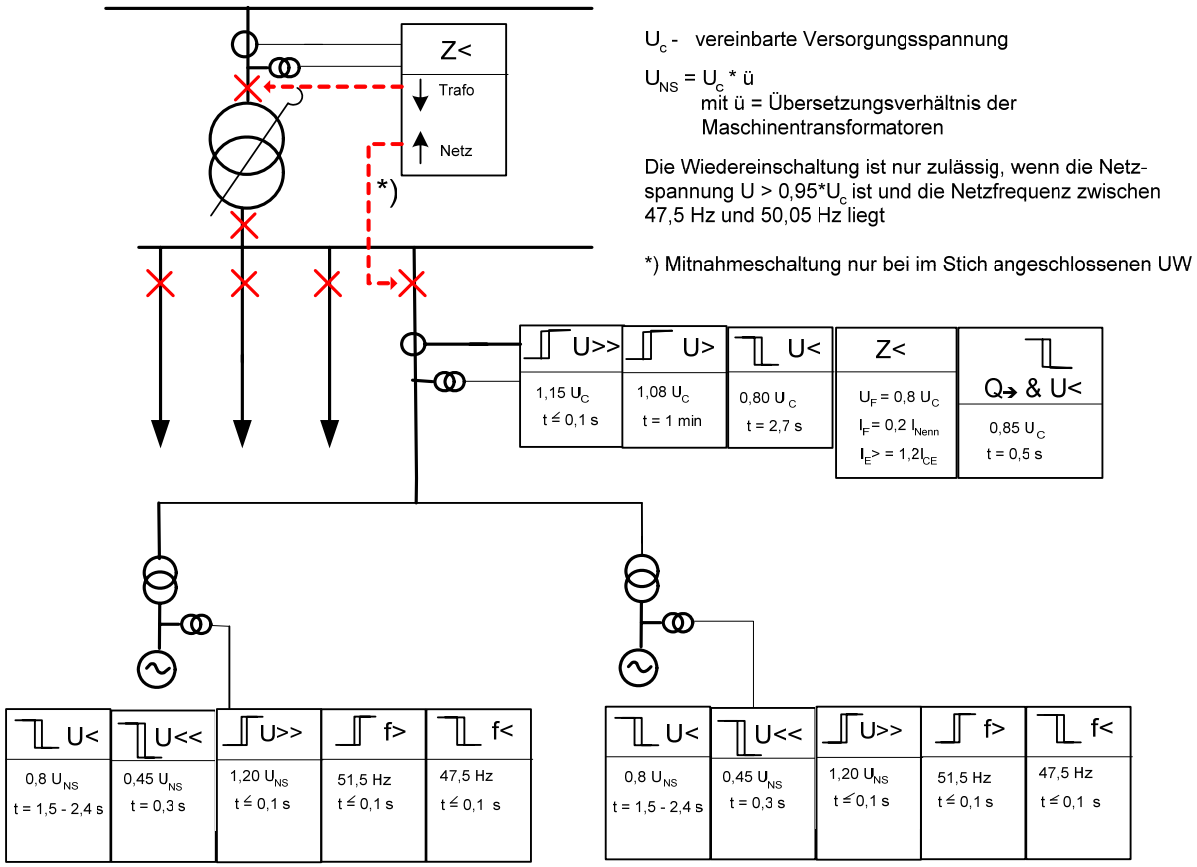

Figure 3.2.3.3-1 Protection concept applied for the connection of generating plants to the bus-bar of a transformer station

3.2.3.5 Connection of the generating plant to the medium-voltage network

As a matter of principle, generating plants connected to the medium-voltage network must be capable of participating in steady-state voltage control and dynamic network support. Where this was not required yet by the network operator at the time of network connection planning, the conditions described hereinafter shall apply.

Irrespective of the above, it must be possible to retrofit the protection devices mentioned in Section 3.2.3.3 and the necessary transformers at the transfer point (cf. dashed lines in Fi-

gure 3.2.3.4-2). If the generating plant must participate in dynamic network support by injection of a reactive current, the relevant protection devices and transformers need to be upgraded by the connection owner and the settings of the generating units' protection devices must be adjusted according to Section 3.2.3.3 (see 3.2.3.4-2).

3.2.3.6 Short-circuit protection

The connection of generating plants to the medium-voltage network is implemented either by means of circuit breakers or through an on-load-switch-fuse combination, depending on network conditions and the number and size of generating units.

Generating plants connected through a circuit breaker shall be equipped at least with overcurrent time protection as short-circuit protection. Short-circuit protection of generating plants connected by means of a combined on-load-switch-fuse is ensured by the fuse.

The installation of a distance relay and the relevant voltage transformers is to be taken into consideration in the conceptual design, and has to be realized at the network operator's request. The "retrofitting" option is shown in Figure 3.2.3.4-2 by a broken line.

The distance protection device must then act upon the circuit breaker at the transfer point or, in the case of an on-load-switch-fuse combination, upon the generator-side circuit breaker.

3.2.3.7 Protective disconnection devices

At the **transfer station,** the installation of protective disconnection devices is to be taken into consideration in the conceptual design according to Section 3.2.3.3, and has to be realized at the network operator's request. If connected through a circuit breaker, the protective disconnection device acts upon the latter or upon the coupling switch, if it is connected by means of an on-load-switch-fuse combination, the protective device acts upon the generator-side circuit breaker or on the coupling switch (see Annex C, Examples of connections).

The same protection equipment as for the generating plant's connection to the bus-bar of a transformer station (cf. Table 3.2.3.3-2) is required at the **generating units**; only the settings of the voltage protection devices are dissimilar.

The network operator may require super-ordinate protective disconnection equipment for generating plants which have a widespread medium-voltage network available and are connected with the network operator's network through a transfer station. The function of this protective equipment is to disconnect the entire generating plant from the network if the network voltage or network frequency limits are violated. A circuit breaker has to be generally provided for disconnection from the network in this case.

Protective disconnection devices of generating units shall be connected at the high or low-voltage side of the generator transformer. The following settings are recommended as basic parameters:

Function	**Setting range of the protection relay**	**Recommended protection relay settings**	
Rise-in-voltage protection U>>	1.00 – 1.30 U_n	1.15 U_{NS} *)	≤ 100 ms *)
Under-voltage protection U<	0.10 – 1.00 U_n	0.80 U_{NS} **)	1 s **)
Under-voltage protection U<<	0.10 – 1.00 U_n	0.45 U_{NS} **)	300 ms **)
Rise-in-frequency protection f>	50.0 – 52.0 Hz	51.5 Hz	≤ 100 ms
Under-frequency protection f<	47.5 – 50 Hz	47.5 Hz	≤ 100 ms

Table 3.2.3.4-1 Recommended settings of the protective equipment at the generating unit for connection of the generating plant to the medium-voltage network.

U_n is the secondary rated transformer voltage and thus the reference voltage of the protection equipment.

U_{NS} is the voltage on the low-voltage side of the generating unit's generator transformer ($U_{NS} = U_c$ / ü with ü = transformation ratio of the generator transformer). Consideration is to be given to the fact that disconnection times are obtained from the sum of setting times and inherent response times of the switching device and the protection equipment.

**) and **) see remarks on Figure 3.2.3.4-1.*

The graphic below shows the protection scheme within the transfer station and in the generating units if the generating plants are connected to the medium-voltage network.

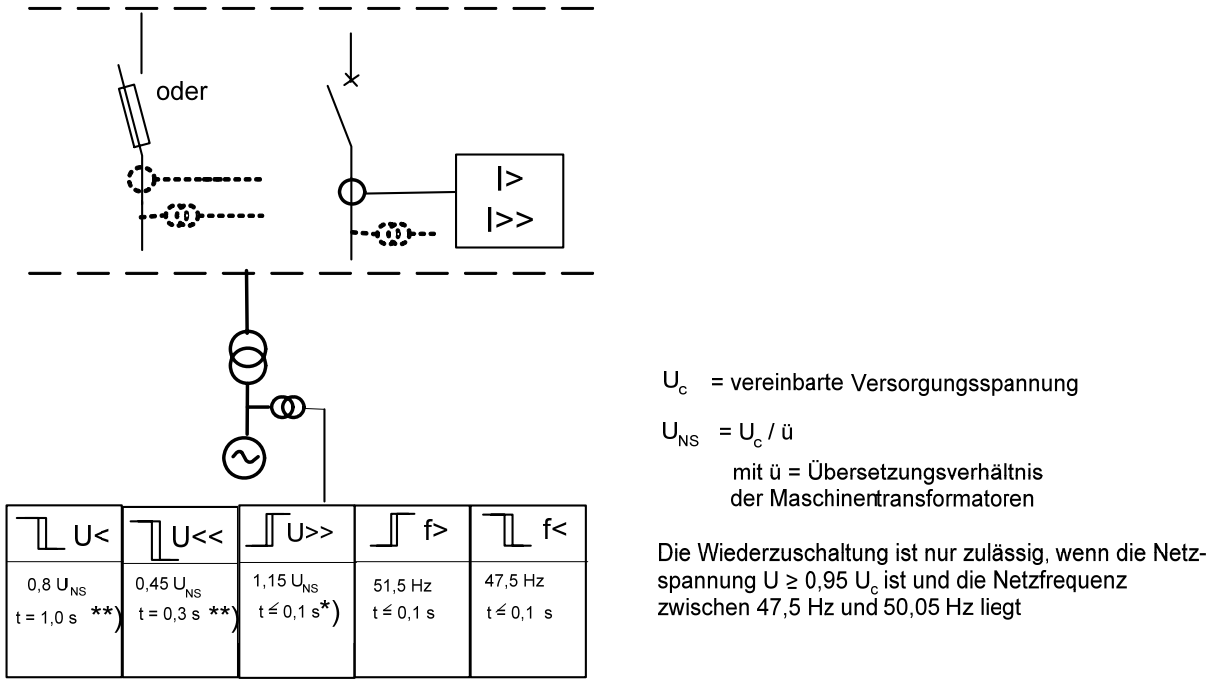

Figure 3.2.3.4-1 Protection scheme for the connection of generating plants to the medium-voltage network

Notes on the protection settings

**) Concerning the rise-in-voltage protection, the values 1.06 U_{NS} or . 1.10 U_{NS} may be adjusted for instance instead of the value 1.15 U_{NS} depending on the network operator and on network conditions. However, to enable the required reactive power feed-in to be implemented for at least 300 ms in the event of faults, the time delay for the U>> relay has to be correspondingly increased. Alternatively, apart from the U>> relay (setting: 1.15 U_{NS} , ≤ 100 ms), the network operator may require an additional U> relay (setting: e .g 1.08 U_{NS} , 20 s).*

***) The protection equipment settings shall be selected so as to ensure that they are consistent with the following minimum requirements for the generating plant to remain connected to the network. The plants shall remain connected to the network for at least 300 ms in the event of voltage drops at up to 0.45 U_{NS}. If the voltage falls below 0.45 U_{NS} the plants can be disconnected from the network without delay.*

- *With a view to reducing for a resonant-earthed system the probability of islanding in the event of double earth faults with a root on the line which the generating plant is connected to, the adjusted time delay of the U<< protection should be smaller than or equal to the lowest response delay adjusted of the short-circuit protection devices of this line. This enables the fault to be cleared almost simultaneously with the network protection devices by means of the protective disconnection equipment of the generating unit. If the time of the U<< relay was set at a higher value, the "under-voltage" criterion would no longer be valid as the fault would be*

cleared earlier on the network side. As a result, an isolated network with an earth fault will be operated due to the generating plant. The line-to-line voltages remain unchanged here. The under-voltage protection thus „loses" its excitation criterion. The same applies to single-line-to-earth faults in networks with low-impedance earthing.

- *If automatic reclosing is carried out on a line which the generating plant is connected to, the following settings of protection equipment are recommended: U<< relay: 0.45 U_{NS}, without delay and U< relay: 0.8 U_{NS}, 300 ms.*

Figure 3.2.3.4-2 shows the extended protection scheme within the transfer station and the generating units with generating plants connected to the medium-voltage network if the generating plant is to participate in dynamic network support by feeding reactive power into the network. The components retrofitted as compared to Figure 3.2.3.4-1 are represented in broken lines.

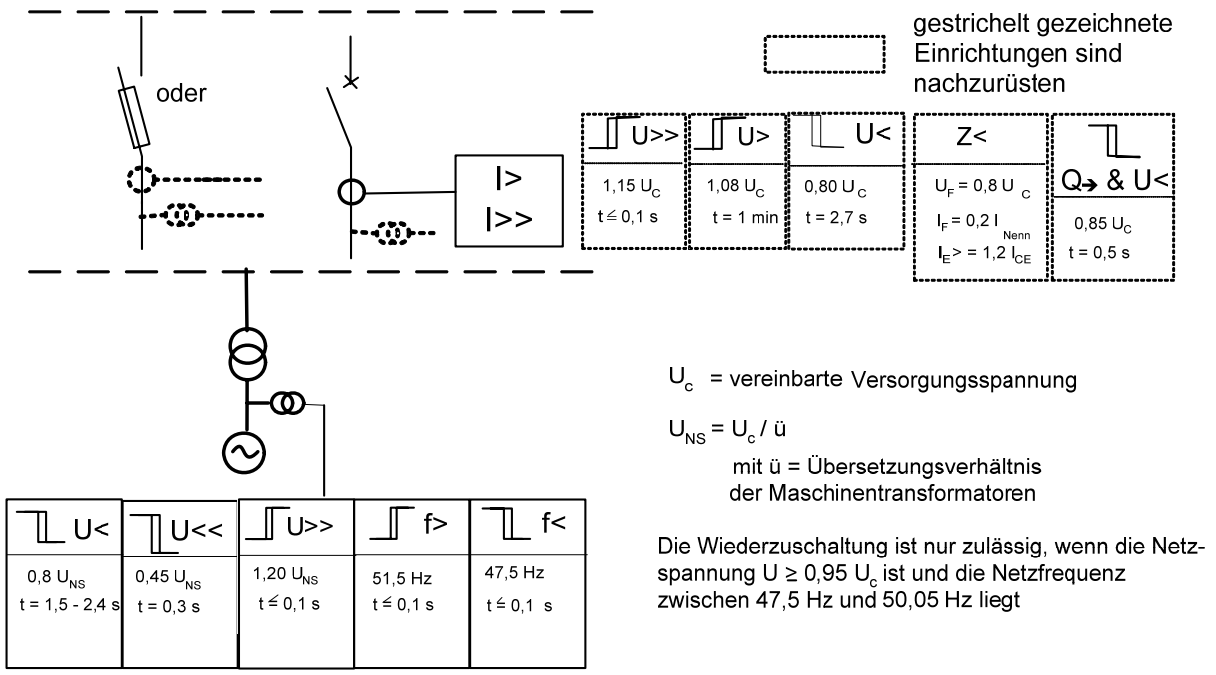

Figure 3.2.3.4-2 Protection scheme for the connection of generating plants to the medium-voltage network with retrofitted components

Note:

In case that the generating plant must participate in dynamic network support, a distance protection relay is required in the transformer station which is to be installed in the medium-voltage outgoing feeder and, for transformer stations with spur connection, on the high-voltage side of the network transformer. In the case of transformer stations with spur connection, the OFF command of the line

protection equipment installed on the high-voltage side of the network transformer acts on corresponding circuit breaker of the connected generating plant. Furthermore, inter-tripping of the protection equipment of the medium-voltage outgoing feeder is required to the relevant circuit breaker of the connected generating plant.

3.2.4 Test terminal

For the implementation of functional tests on protection equipment, a terminal block with sectionalizer and test sockets has to be provided as interface and mounted at an easily accessible place. Its basic structure is shown in Figure 3.2.4-1.

The measurement inputs of the protection equipment, the auxiliary supplies and the tripping devices for coupling switches shall be led via this terminal block. This shall apply as well if functions of protective disconnection are integrated as a whole or separately into other appliances (e.g. programmable control). In this case, the appliances shall be mounted or programmed so as to enable the release or the inspection of the protective functions irrespective of the generating plant’s operating condition.

The type and structure of the test terminal need to be agreed with the network operator. Instead of the test terminal, the network operator may also require that a test socket be used.

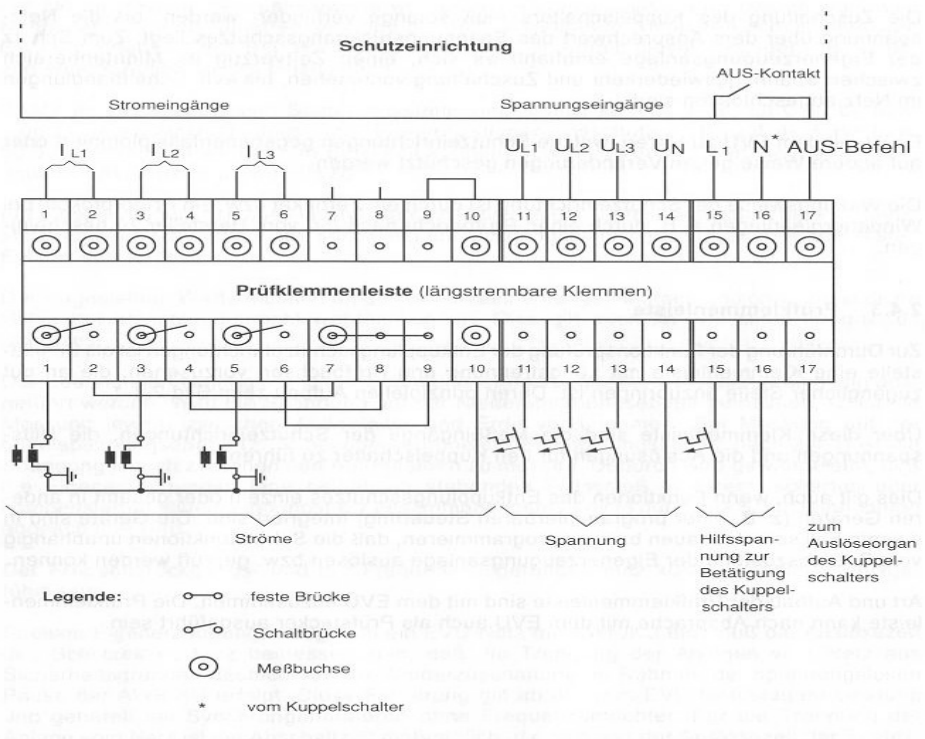

Figure 3.2.4-1: Basic structure of the test terminal board

4 Measuring for accounting purposes

The installation, operation and maintenance of measuring devices shall be carried out according to the „MeteringCode“ [13] and in line with the Technical Connection Conditions of the network operators.

The installation and operation of measuring devices shall be agreed in due time between the connection owner and the network operator or meter operator. According to the Metrology and Verification Act, only certified and verified meters and transformers shall be used in business transactions.

The connection owner shall provide a meter cabinet according to DIN 43870 for the installation of the measuring, control and communication equipment and take care of its connection to the instrument transformer.

The minimum requirements to be satisfied by measuring devices are specified by the network operator concerned. The following accuracy classes shall be provided as a rule:

- Meters: class 1 (active energy) or 2 (reactive energy)
- Transformers: class 0.5 (voltage transformers) or 0.5S (current transformers).

Load-profile meters shall be used for the continuous registration of metered values for contractually agreed energy directions at ¼-hour intervals. The following customer facilities where also energy meters may be used are exempted from this rule:

- Generating plants as defined by the Renewable Energy Sources Act (German abbreviation: EEG) for which the use of load-profile meters is obligatory only for plant capacities from 500 kW;
- all other customer facilities with an energy consumption (extraction from the network) or an energy quantity supplied to the network on the basis of the Co-generation Act (German abbreviation: KWK-G) of up to 100,000 kWh annually.

[13] MeteringCode 2006, published by VDN

5 Operation of the plant

5.1 General

The operation of electric facilities comprises all technical and organizational activities required to ensure the functional efficiency and security of plants. These activities include all operating measures as well as electrical and non-electrical operations as described in the applicable rules and regulations, particularly in DIN VDE 0105-100 [14]. For the operation of the connection facility, the network operator's provisions and guidelines shall be observed in addition to applicable legal and official regulations, in particular with regard to switching operations and work on the network point of connection.

Responsibility for the operation of the connection facility shall rest with the plant operator.

The operator shall name a person to the network operator responsible for the proper operation of the connection facility. This person must be a qualified electrical specialist having switching authority, and shall be available any time to the network operator. Relevant information shall be deposited with the network operator and mutually updated immediately in the case of changes. If the plant operator has the necessary qualifications, he may himself carry out the function of the person responsible for the operation of the connection facility.

The property boundary and the boundaries of the area at disposal have to be agreed between the network operator and the plant operator.

If work is carried out on the connection facility which is within the network operator's area of disposal, the plant operator shall nominate to the network operator a plant-responsible person that, according to DIN VDE 0105-100 is responsible for the plant components at the working premises.

In the case of contingency, disturbances or risk to network security, the network operator is entitled to immediately disconnect the connection facility from the network or to reduce active power supply of the generating plant.

Should the network operator identify serious faults in terms of personal and plant safety within the connection facility, he is entitled to disconnect these plant components from the network until these faults have been remedied.

[14] DIN VDE 0105 – 100 (EN 50110-1) „Betrieb von elektrischen Anlagen“

The plant operator is required to disconnect the switching bays of the connection facility located in his area of disposal on demand of the network operator.

Scheduled disconnections of network equipment and changes of the switching status due to maintenance may require a temporary disconnection of the generating plant from the network or a reduction of its output. The implementation of this work shall be announced by an adequate advance notice.

The plant operator shall agree with the network operator in due time proposed changes carried out in the connection facility to the extent that they have an impact on the network connection and the connection facility’s operation, such as increase or reduction of power demand, replacement of protection equipment, modifications to the compensation equipment.

Different points of connection on the network of the network operator(s) must not be operated in an interconnected manner through facilities of one or several plant operators.

5.2 Access

The connection facility must always be kept locked. Access to the facility shall only be granted to qualified electrical personnel or persons trained in electrical terms, or to other persons if they are accompanied by qualified electrical personnel or by electrically trained persons (cf. DIN VDE 0105-100).

The network operator and the persons acting on his behalf shall be granted safe access at any time (even outside normal working hours) to his facilities and to the plant components within the area at his disposal within the connection facility (e.g. by means of a double closing device). Where applicable, the same applies to separate rooms for measuring, protection and control equipment. Access to the facility must be possible at any time to the network operator’s vehicles. A direct access road and a paved transport route have to be provided to this end.

If there are any modifications in terms of the access to the connection facility, e.g. changes to the locking system, the network operator shall be immediately informed, and unimpeded access has to be guaranteed.

The network operator may grant access to his facilities to the plant operator and qualified personnel of the latter.

5.3 Area at disposal / Operation

Instructions for switching operations shall be given by the network operator for plant components within the area exclusively at his disposal. Where switching devices are within the area at the common disposal of the network operator and the plant operator, the latter or the persons acting on their behalf shall agree on the switching operations to be carried out within these switching bays, and determine on a case-by-case basis who is to give the switching instruction. Switching operations for the remaining plant components are ordered by the plant operator or by the persons acting on his behalf.

Operator control actions shall only be carried out by order of the person with authority over the area at disposal (network operator and/or plant operator). Operator control actions may only be implemented by qualified electrical personnel or persons trained in electrical terms.

5.4 Maintenance

Responsibility for the proper maintenance of plants and equipment rests with the respective owner. This applies as well to plant components within the area at the network operator’s disposal.

According to the accident prevention provisions in force and VDE Guidelines, the plant operator has to take care that inspections of the proper condition of electrical installations and operating equipment are carried out at regular intervals. The results of the inspections shall be documented and submitted to the network operator on demand. This requirement is satisfied under normal operating and environmental conditions if the inspection deadlines mentioned in BGV A3, Table 1 A [15] are observed.

Disconnections carried out within the area at the disposal of the network operator shall be agreed in due time between the plant operator and the network operator.

5.5 Operation in the event of disturbances

Even in the event of a forced zero voltage condition at the network connection point, modifications to the switching status shall be implemented only in accordance with the disposal area boundaries between the network operator and the plant operator.

Irrespective of the disposal area boundaries, the network operator may immediately disconnect the customer facility from the network in the event of disturbances in the medium-voltage network. If possible, the network operator shall inform the plant operator in due

time about this measure. Reconnection is implemented in accordance with the disposal area boundaries.

Due to the possibility of voltage recovery at any time after an interruption of supply, the network is to be considered as permanently energized. The plant operator is usually not informed by the network operator prior to the reconnection.

Fault clearance may require extraordinary investigations and measurements which the network operator and the plant operator shall carry out on their operating equipment.

For fault clearance and remedy, the network operator and the plant operator shall provide mutual support. All information required for fault clearance are to be exchanged between the network operator and the plant operator.

The plant operator shall immediately inform the network operator about any disturbances or irregularities in the connection facility that may have an impact on the network operator’s network. In this case, a reconnection must be carried out only after appropriate clarification of the fault reason and on consultation with the network operator.

5.6 Further conditions for the operation of generating plants

Apart from Sections 5.1 to 5.5, further conditions need to be observed for the operation of generating plants.

Should the agreed maximum apparent connection power S_{AV} be exceeded, the network operator shall be entitled to disconnect the generating plant from the network. To this end, he may require the plant operator to install adequate technical devices which disconnect the connection facility from the network operator’s network if certain limit values are exceeded (e.g. agreed power injections).

If the generating plant is shut down by the network operator, the plant operator shall agree upon the reconnection with the network operator’s office responsible for network operation.

After tripping of the generating plant’s or generating unit’s protective disconnection devices, the plant must not be automatically reconnected until the connection conditions according to Section 5.7 have been satisfied. In case of manual reconnection, a previous agreement with the network operator is required.

The network operator may require the plant operator to carry out an inspection of the connection facility’s equipment and protection devices to provide evidence of their operational capability.

[15] BGV A3 „Elektrische Anlagen und Betriebsmittel“

5.7 Connection conditions and synchronization

5.7.1 General

During operation, the technical conditions described in Section 2 which form the basis of the decisions about connection of the generating plant, may be modified only with the consent of the network operator.

In the event of tripping of protective disconnection devices due to network faults, it is recommended for the sake of protection of the generating plant to provide for a delay of some minutes between voltage recovery and reconnection until possible switching operations in the network have been finalized. A major part of those switching operations in the network are usually terminated after 10 minutes.

Delays in the reconnection of a generator and the time graduation for the reconnection of several generators must be large enough so as to ensure that all control and transient phenomena within the generating plant resulting from the reconnection are safely terminated. To this end, the conditions described in Sections 2.4.1, 2.4.2 and 2.5.3 need to be met.

In case of reconnection of the generating plant to the network operator’s network after tripping of a protective disconnection device, the increase in active power supplied to the network of the network operator must not exceed a gradient of maximally 10 % of the agreed active connection power P_{AV} per minute. This shall only apply to generating plants with an agreed connection power of more than 1 MVA. The conditions described in Sections in 5.7.2 and 5.7.3 concerning the connection and synchronization of generating plants shall be observed.

A connection or reconnection of the generating plant shall be admissible only if the network voltage is at least 95 % U_c and the frequency between 47.5 Hz and 50.05 Hz.

5.7.2 Connection of synchronous generators

For synchronous generators directly connected to the network, a synchronizing device shall be provided at an appropriate place. While it is advisable to assign the synchronizing device for generating plants not capable of isolated operation to the generator circuit breaker, it is recommended providing additionally a synchronizing device at the coupling circuit breaker for generating plants capable of isolated operation. An automatic paralleling device shall be preferred. The settings are to be agreed with the network operator.

The following values may be regarded as usual maximum values:

- $\Delta\varphi = \pm 10°$
- $\Delta f = 500$ mHz
- $\Delta U = \pm 10$ %.

After work carried out on the generating plant and/or the network connection, it is essential to check in particular the correct phase sequence.

If the generating plant is not equipped with fine-step synchronization so that coarse synchronizations are inevitable, measures shall be provided for the limitation of current surges (e.g. bridgeable reactors).

5.7.3 Connection of asynchronous generators

Asynchronous generators started by a drive assembly must be connected in a current-limited manner with a speed of between 95 % and 105 % the synchronous speed.

For asynchronous generators which are not connected under off-voltage conditions (e.g. double-fed asynchronous machines) the connection conditions for synchronous generators need to be observed.

5.8 Reactive power compensation

For a customer facility with a generating plant, reactive power exchange of the entire customer facility must correspond to the active factor cos φ determined in the network connection / network usage agreement.

For the design of a possibly required compensation installation, it is necessary to take the operating mode of the generating plant and the resulting impact on the network voltage into consideration. If there are strong reactive power fluctuations (e.g. in the case of wind energy plants with uncontrolled asynchronous generators), reactive power compensation must be controlled automatically.

The compensating capacitors must not be switched on prior to the connection of the generator. When the generator is switched off, capacitors must be switched off simultaneously.

The operation of the compensation installation may require measures for the limitation of harmonic voltages and prevention of inadmissible repercussions on audio-frequency remote control. Therefore, the capacity, the switching scheme and the control regime of the reactive power compensation installation need to be agreed with the network operator.

6 Verification of the electrical properties

6.1 General

Every generating unit requires a type-specific unit certificate which specifies the electrical properties of the generating unit in order to furnish proof of the conformity of the generating unit with the requirements of this guideline.

A unit certificate may also be issued for generating units which do not meet the requirements of this guideline in every respect, if the electrical properties deviating from these requirements are specified in the certificate. The survey of the generating unit shall be based on FGW TR3.

Furthermore, information about the electrical properties of the entire generating plant at the network connection point shall be provided to the network operator by means of a plant certificate for his network connection inspection. The certifier shall confirm the project-specific electrical properties, and that the behaviour of all generating units connected to the network connection point, including the service lines to the network connection point (thus of the entire connection facility) meets the requirements of the guideline. For the elaboration of the plant certificate, the network operator shall make available the data of the network short-circuit power S_{kV} and the network impedance angle ψ_k of the network connection point determined for the time being (see Annex E Workflow for the connection treatment) .

Note: These data form the basis for the verification of the generating plant's behaviour in conformity with the guideline. For the dimensioning of the plant components in terms of short-circuit current capability, higher requirements have to be satisfied in accordance with the technical connection conditions of the network operator.

Up to an apparent connection power S_A of the generating plant of maximally 1 MVA and a line length from the network connection point to the generating unit(s) of ≤ 2 kilometres, one unit certificate for every type of generating unit is sufficient. In case that the requirements of the guideline were not all verified by the unit certificate, a plant certificate shall prove that the plant behaviour is in conformity with the guideline.

Certification is performed by a certification office accredited to this end through the German accreditation council (Deutsche Akkreditierungs–Rat - DAR) according to EN 45011 [16] and registered at BDEW. This office certifies the conformity of the plant features with the requirements of this guideline. Where international standards (IEC or EN standards), national

VDE rules or agreements like those of FGW (German wind power federation) exist, the requirements and test provisions defined there are also met by the certificate. The certification office shall verify that the manufacturer has introduced a quality management system according to ISO 9001.

Plant and unit certificates must certify the conformity of the generating plants or units with the requirements of this guideline at least in terms of the properties described in Sections 6.2 to 6.6. To simplify matters, only the term "generating plant" is used in these Sections. The requirements shall analogously apply to generating units as well, while the tests from FGW TR3 for model validation on a generating unit have usually to be carried out in a free field test. The verification for generating plants is performed through validated computation models or free field tests.

The workflow represented in Annex E is to be implemented as from 1st January 2010. Unit and plant certificates for generating plants which are applied for at the network operator during the period from 1st January 2009 to 1st January 2010, need to be submitted by the plant operator to the network operator by 30 June 2010.

Note: Prototypes which have to be connected to a medium-voltage network for surveying purposes, can be provisionally connected without certificates in agreement with the network operator.

6.2 Verification of feed-in power

For generating plants whose active power output does not depend on primary energy supply, for instance CHP, it is sufficient to indicate the maximum active power feed-in and the planned operating mode, such as operation according to a required heat or current demand.

Concerning generating plants whose active power output depends on the primary energy offer, such as wind energy plants or photovoltaic, it is necessary to indicate the active power feed-in as a function of the primary energy offer.

For wind energy plants, it is necessary to verify the active power as a function of the wind velocity measured according to FGW TR3.

6.3 Verification of network interactions

To verify admissible network interactions determined in Section 2.4, it is necessary to furnish proof of spurious radiation produced by the generating plant.

[16] DIN EN 45011 „Allgemeine Anforderungen an Stellen, die Produktzertifizierungssysteme betreiben“, March 1998

The evidence provided must comprise the information about network interactions from the FGW guideline TR 3 [17], Revision 19. The information required according to the aforementioned guideline shall also be submitted for generating plants which do not use wind as primary energy.

6.4 Verification of the generating plant’s behaviour connected to the network

The discharge of the following requirements shall be verified by tests on the generating plants or by means of a validated computation model of the generating plant.

6.4.1 Verification of dynamic network support

6.4.1.1 Verification of compliance with requirements

Evidence shall be provided by means of tests on the generating plant or on a validated computer model of the generating plant, showing that the control equipment applied for the control of the generating plant meets the requirements described in Section 2.5.1.2. To this end, the half-oscillation r.m.s. value of the three line-to-line voltages at the point of connection has to be used as a basis. If the network voltage is not recorded at the network connection point, it must be determined by means of computations taking the impedances existing in the network of the generating plant into consideration. The following characteristics shall be verified with regard to voltage drops due to two-phase (exclusively in the case of generating units) and three-phase faults in the network:

For generating plants of types 1 and 2:

- If the half-oscillation r.m.s. value decreases to less than 85 % of the agreed service voltage U_c at the network connection point during ≤ 150 ms, the generating plant must not be disconnected from the network according to Section 2.5.1.2. The correct behaviour of the generating plant has to be proven for a decrease of the network voltage to values of between 70 % and 80 % U_c, 45 % and 60 % U_c, 20 % and 30 % U_c and to a value of < 5 % U_c.

For generating plants of type 1:

- In addition, the generating plant’s correct behaviour has to be proven for a decrease of the line-to-line network voltage to a value between 70 % and 80 % U_c over 700 ms.

[17] Annex B to the „Technische Richtlinie für Windenergieanlagen“ Part 3: Bestimmung der

For generating plants of type 2:

- The correct behaviour of the generating plant has to be proven for a decrease of the line-to-line network voltage to a value between 30 % and 40 % U_c over 700 ms and between 70 % and 80 % U_c over 1.4 s.

The variations in time of the half-oscillation r.m.s. values of voltages and currents and of the active and reactive powers determined on that basis shall be determined and documented for all tests.

6.4.1.2 Verification of reactive power feed-in during the fault

It is to be proven that the requirements from the TransmissionCode 2007 in terms of voltage support in the event of network faults are satisfied.

The active and reactive currents injected during a fault while the generating unit remains connected to the network are to be measured during the tests in accordance with the requirements defined in Section 6.4.1.1 pursuant to FGW TR 3. A validated computation model of the generating unit’s behaviour in the event of faults in the network shall be set up on the basis of the measurement results. The variations in time of the required variables shall be given as half-oscillation r.m.s. values.

The verification of the generating plant’s behaviour shall be carried out by computation using the validated models. For three-phase faults, at least two network fault cases with different voltage drops are to be simulated.

6.4.2 Verification of the short-circuit current contribution

On the basis of the variations in time of the half-oscillation r.m.s. values of currents in the event of three-phase faults according to Section 6.4.1.1, the amount of the generating unit’s short-circuit current contribution is to be given as shown below:

I''_k / I_{rE1}	U = 0	U = 30 % U_c	U = 80 % U_c
t = 0s			
t = 150ms	1)	1)	1)
t = 1000ms	1)	1)	1)

[1]) *It has to be indicated whether the short-circuit current is supplied to the network resistively or inductively.*

The generating plant’s short-circuit current contribution shall be calculated from these values.

6.4.3 Verification of the properties required for active power output

The following requirements shall be verified, measured according to FGW TR 3:

- active power reduction in steps of 10 % of the nominal power to 0 %; attainment of the largest set point step-change within maximally one minute,
- active power reduction to a 10 % value – output without disconnection from the network,
- power reduction at a network frequency of > 50.2 Hz with a gradient of 40 % of the active power per Hertz.

6.4.4 Verification of the reactive power operation mode under normal network operating conditions

6.4.4.1 Verification of reactive power values

For generating plants whose reactive power values are independent of the active power output, it is sufficient to indicate the maximum reactive power for inductive (overexcited) and capacitive (under-excited) reactive power withdrawal.

For generating plants whose reactive power values depend on the active power output, it is necessary to indicate the maximum reactive power for inductive (under-excited) and capacitive (overexcited) reactive power withdrawal as a function of the active power feed-in.

As far as wind energy plants are concerned, verification of the maximum reactive power as a function of active power, measured according to FGW TR3, is required.

Moreover, measurements shall be carried out to show that the determination of a active factor in the system control is actually observed at the generating unit’s terminals (admissible fault for cos φ: 0.005).

6.4.4.2 Verification of the reactive power step response

The reactive power step response after change of a specified set point shall be indicated by measurements or equivalent model calculations.

A reactive power step-change of maximum inductive to maximum capacitive reactive power feed-in and vice versa shall be defined as set-point step change. The variation in time is to

be indicated for the complete active power feed-in and an injection of between 40 % and 60 % of the nominal power, and must not exceed one minute.

The verification of reactive power control according to a given Q(U) characteristic including the gradient limitation, is performed through specification of a voltage step change from the lowest to the highest voltage value of the characteristic and vice versa. The reactive power step response is measured for the shortest and the longest response time. The possible settings shall be specified.

6.5 Verification of connection conditions

It is to be proven that the generating plant

- is not connected or reconnected before a network voltage of at least 95 % U_c and a network frequency of 47.5 Hz and 50.05 Hz is reached,
- increases the active power (in the event of tripping through protective disconnection) after the plant has been reconnected, with a gradient of maximally 10 % of the rated power per minute (applies only to generating plants of > 1 MVA).

6.6 Verification of the properties of disconnection equipment

The observance of the requirements determined in Section 3.2.3 for protective disconnection devices has to be proven. This shall apply as well if the protection devices are integrated in the system control. For instance, the required setting ranges of set points, disconnection times, the reset ratio and the total off-period (examination of the complete causal relationship) are to be verified through measurements.

Annexe

A Definitions

Area of disposal	Area which defines the responsibility for giving switching operation instructions. *Note: Some network operators designate this area as switching order area.*
Attendance	Attendance of electrical equipment comprises observation and positioning (switching, setting, controlling).
Automatic re-closure	Re-closing (by an automatic device) of a circuit breaker assigned to a faulty network part assuming that the fault disappears during the time of interruption.
Connection facility	A connection facility comprises all installations required for the connection of one or several generating units to a system operator's network
Connection owner	Any natural or legal person whose electrical installation is immediately connected through a supply connection to the network of the network operator. The connection owner has a legal relationship with the network operator.
Current, Rated current I_r	Current of a device or installation for which the device or the installation has been designed for permanent operation by the manufacturer or on the basis of a standard.
Current, Reactive current I_b	Share of the current fundamental oscillation which does not contribute to the active power. Reactive currents have a phase relationship of +/-90° to the voltage to neutral.
Current Short-circuit current I''_k	Initial symmetrical short-circuit current according to DIN EN 60909-0 (VDE 0102).
Active factor cos φ	In the present guidelines, the active factor cos φ is the cosine of the phase angle between the fundamental mode of oscillation of a voltage to neutral and a current.
Distribution system operator	→ Network operator
Earthing switch	An earthing switch is a mechanical switching device for earthing of parts of a circuit withstanding for a certain time electric currents under abnormal conditions, such as in the event of a short circuit; in normal operation, an earthing switch must not carry electric current.
Fault clearance time	Period from the beginning of a fault to its elimination.
Flicker	Voltage fluctuations producing the subjective impression of fluctuations in the lighting density (of lighted objects) via the chain of electric lamp – eye – brain.

Flicker, Flicker coefficient c	Plant-specific non-dimensional quantity which, together with the parameter factors „rated apparent power of the individual plant“ and „short-circuit power at the junction point“ determines the volume of the flicker produced by the plant at the junction point.
Flicker, Long-term flicker strength P_{lt}	Quantity for the assessment of flicker-effective voltage fluctuations of a time interval of 120 minutes. *Note: The index „lt“ means long term*
Generating plant	Plant comprising one or several electricity generating units (including the connection facility) and all electrical installations required for operation of the plant (see graphic representation of “Terms”) Symbols relating to the generating plant are given the index “A”.
Generating unit	A single facility for the generation of electrical energy. *Note: Symbols relating to the generating unit are given the index “E”.*
Harmonics	Sine-shaped oscillations whose frequency is an integral multiple of the fundamental frequency (50 Hz).
Inter-harmonics	Sine-shaped oscillations whose frequency is no integral multiple of the fundamental frequency (50 Hz). Inter-harmonics may also occur in the frequency range between 0 Hz and 50 Hz.
Junction point	The point in the public network closest to the customer facility to which further customer facilities are connected or can be connected. It is normally identical with the network connection point. The junction point is used as a basis for the assessment of network disturbances.
Medium-voltage network	Within the meaning of these guidelines, a medium-voltage network is a network with a rated voltage of from > 1 kV to < 60 kV.
Network connection point	Network point at which the customer facility is connected to the network operator’s network. The network connection point is mainly important in the context of network planning. It is not necessary in any case to make a distinction between the network connection point and the junction point.
Network impedance angle ψ_k	Arc tangent of the ratio of the reactance X_k to the resistance R_k of the short-circuit impedance at the network point considered, $\psi_k=\arctan(X_k/R_k)$
Network operator	Operator of a network of public electricity supply.
Operation	Operation comprises all technical and organizational activities required to enable the electric facility to function. This includes switching, controlling, monitoring and maintenance as well as electro-technical and non-electro-technical work.

Operation responsible person	A qualified electrical specialist with switching authority named by the plant operator to the network operator as the person responsible for proper operation of the transfer station. *Note: The plant operator himself may assume the function of operation responsible person on condition that he has the necessary qualifications.*
Over-excited	Operating status of a synchronous generator at which the generator absorbs capacitive reactive power from the network (cf. Annex B.6).
Plant installer	The installer of an electric facility within the meaning of these Technical Connection Conditions is both the one who erects, extends, modifies or maintains an electric facility, and the one who, though not having erected, extended modified or maintained the plant, inspects the work carried out as an expert and assumes responsibility for its proper implementation.
Plant operator	Within the meaning of these guidelines, the entrepreneur or a natural or legal person acting on his behalf that undertakes the entrepreneurial obligation to ensure the secure operation and proper condition of the customer facility.
Plant responsible person	A person charged to assume during the implementation of work the direct responsibility for the operation of the electric facility or of components belonging to the working premises.
Power, Active Power P	Electric power relevant to the generation of electrical energy and available to the conversion into other forms of energy (e.g. mechanical, thermal or chemical). Note: This is the nominal power of the generating unit specified by the manufacturer for (e.g. rated wind speed for wind energy plants, rated head of hydro power plants).
Power, Maximum active power P_{Emax}	Highest active power of a generating unit. It is obtained as the highest medium value during a defined period of normally 10 minutes. For wind energy plants, this value can be obtained, for instance, as 600-second maximum value from the test report according to [20]. If this value is not explicitly indicated, the electric nominal power of the generating unit is usually used. *Note: For some plants, a higher than their nominal connection power may occur during operation.*
Power, Active connection power P_A	Active connection power is the active power of a generating plant composed of the sum of the highest active powers of generating units. Normally, the rated power of the generating units is used for indicating their maximum active power (in the case of wind energy plants, this is the 10-min-medium value $P_{Emax600}$ of the generating units). It is applied in the network connection test.

	Note: For some plants, a higher apparent power than their active connection power may occur during operation.
Power, Agreed active connection power P_{AV}	The active power agreed between the network operator and the connection owner.
Power, Apparent power S	Product of the rms values of the operating voltage, current and the factor √3.
Power, Apparent connection power S_A	Apparent power of a generating plant composed of the highest apparent power of the generating units. It serves as a basis to the network connection test. Normally, the rated apparent power S_{rE} of the generating units is entered for their highest apparent power. In the case of wind energy plants, the 10 min medium value $S_{Emax10min}$ of the individual plants is entered. *Note: For some plants, a higher apparent power than their apparent connection power may occur during operation.*
Power, Agreed apparent connection power S_{AV}	The apparent power which is obtained from the quotient of the agreed active connection power P_{AV} and the lowest active factor cos φ agreed between the network operator and the connection owner.
Power, Maximum apparent power of a generating plant S_{Amax}	The sum of all maximum active powers P_{Emax} divided by the power factor λ which is specified by the network operator at the network connection point. In practical operation, the active factor cos φ is usually used instead of the power factor. $S_{Amax} = \frac{\sum P_{E\max}}{\cos\varphi}$ *Note: In this calculation, all network components between the network connection point and the generating units need to be taken into consideration.*
Power, Rated apparent power S_{rE}	Apparent power for which the generating unit's components are designed.
Power, Nominal power of a generating unit P_{nG}	Active power of a generating unit indicated by the manufacturer for rated conditions (such as rated wind speed in the case of wind energy plants, rated head in the case of hydro power plants).
Power, Reactive power Q	Usually, the reactive power Q is the product of the apparent power and sine of the phase displacement angle φ between the fundamental mode of oscillation of the voltage to neutral U and the current I.
Power factor λ	The ratio of the magnitude of the active power P to the apparent power S: $\lambda = \frac{\lvert P \rvert}{S}$

	Like P and S, λ relates to the rms values of the total alternating quantity, i.e. to the sum of their fundamental mode of oscillation and all harmonics.
Protection equipment	Equipment comprising one or several protection relays and, where necessary, logic components to carry out one or several predetermined protection functions. *Note: Protection equipment is part of a protection system.*
Protection system	Arrangement consisting of one or several protection devices and of further appliances scheduled to carry out one or several protection functions. A protection system comprises one or several protection devices, instrument transformers, wiring, breaking circuit, auxiliary voltage supply and, where provided, information systems.
Reset ratio	Ratio of the reset value of a characteristic variable of a protection relay to the response value of this variable, for instance $U_{rück}$ / U_{an} of a voltage relay.
Short-circuit current I''k	Initial symmetrical short-circuit current according to DIN EN 60909-0 (VDE 0102).
Short-circuit power S''_k	Initial symmetrical short-circuit power decisive for the calculation of the short-circuit strength according to DIN EN 60909-0 (VDE 0102) "Kurzschlussströme in Drehstromnetzen". $S_k'' = \sqrt{3} * U_n * I_k''$
Short-circuit power, network short-circuit power S_{kN}	The short-circuit power available on the network side without the share of the generating plant that is to be connected.
Short-circuit power, network short-circuit power S_{kV}	The network's short-circuit power (based on the sustained short-circuit power) at the junction point, which is decisive for the calculation of network interactions. *Cf. reference [19]. It is generally lower than the short-circuit power used for the rating of the short-circuit strength of facilities.*
Switching current factor, Network-dependent switching current factor $k_{i\psi}$	Plant-specific non-dimensional variable which, given as a function of the network impedance angle, assesses the impact of the current of an individual plant during switching operations on the resulting voltage change and network flicker.
Switching current factor, Maximum switching current factor K_{imax}	Ratio between the highest current occurring during a switching operation (e.g. starting or connecting current or the highest breaking current under normal operating conditions) and the nominal generator current I_{nG}. The current is to be considered here as effective value over a period.
Transfer point	Network point which represents the boundary between the network operator's area of responsibility and that of the operator of the connection facility.

	The transfer point is mainly of importance in the context of operation management. It is not in any case identical with the property boundary.
Transformation ratio	Quotient of rated voltages of the high-side and low-side voltage of transformers.
Under-excited	Operating status of a synchronous generator at which the generator absorbs inductive reactive power from the network (cf. Annex B.6).
Voltage, Agreed service voltage U_c	Normally, the agreed service voltage is equal to the rated network voltage U_n. If the network operator and the customer agree on a voltage at the transfer point which is at variance with the rated voltage, this voltage is the agreed service voltage U_c.
Voltage band	Effective voltage values between an upper and a lower operating voltage of the network.
Voltage change ΔU_{max}	<u>Slow voltage change:</u> A voltage increase or decrease usually attributable to changes of the overall load on the network or a network part. <u>Rapid voltage change:</u> A single rapid change of the rms value of a voltage between two successive voltage values of certain but not specified durations. When indicating a relative voltage change, the voltage change of the line-to-line voltage is related to the ➔ voltage, operating voltage of the network: $\Delta u = \frac{\Delta U_{max}}{U_b}$ Instead of the operating voltage, the agreed service voltage U_c is used as a basis for the connection inspection.
Voltage drop	A sudden decline of the nominal voltage to a value between 90 % and 1 % of the agreed service voltage U_c, followed after a short time by a voltage recovery. As agreed, the duration of a voltage drop is between 10 ms and 1 minute. The depth of a voltage drop is defined as the difference between the minimum effective value of the voltage during the drop (half-oscillation r.m.s. value) and the agreed service voltage U_c. Voltage changes which do not reduce the voltage to below 90 % of the agreed service voltage Uc, are not considered to be voltage drops.
Voltage, Nominal voltage U_n	Voltage by which a network or an installation is defined or identified.
Voltage, Operating voltage U_b	Voltages occurring during normal operation at a certain time and at a certain point of the network. In the present guidelines, this is the rms value (10-minute mean value) of the line-to-line voltage.
Voltage, Highest operating voltage U_{bmax}	Largest value of the operating voltage that occurs at any time and at any point of the network in normal opera-

	tion.
Voltage, Lowest operating voltage U_{bmin}	Lowest value of the operating voltage that occurs at any time and at any point of the network in normal operation.
Voltage, Rated voltage U_r	Voltage of a device or installation for which the device or installation has been designed for permanent operation on the basis of a given standard or by the manufacturer.
Voltage, Specified voltage U_{Q0}	Voltage value specified by the network operator for a generating plant at a voltage-reactive-power characteristic (cf. Section 2.5.4 and Annex B.6).

Figure „Terms“

① Network connection point
② Generating plant
③ Connection facility *
④ Generating unit

* The connection facility usually consists of medium-voltage lines and a transfer station.

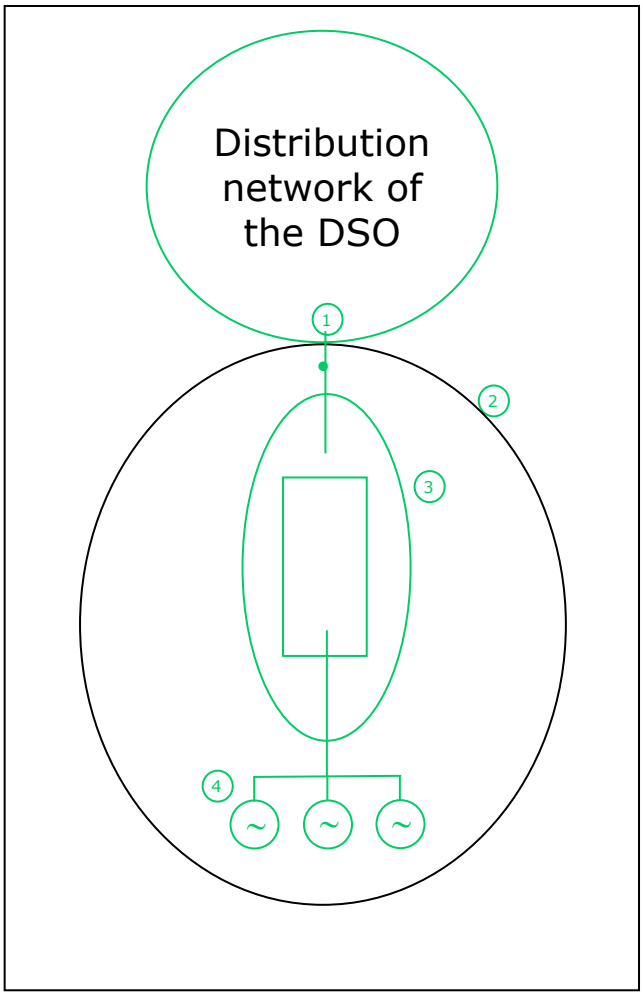

B Explanations

B.1 As to Section 2.3 Admissible voltage changes

Where only one junction point exists, the resulting voltage change can be estimated most easily by means of the short-circuit-power ratio k_{kl}:

$$k_{kl} = \frac{S_{kV}}{\sum S_{A\max}} \qquad \text{(B.1-1)}$$

where S_{kV} is the network short-circuit power at the junction point and ΣS_{Amax} the sum of the maximum apparent power of all generating plants connected and/or planned to be connected to this junction point.

Where only one junction point exists within a network, the condition for a voltage change is always adhered to if the short-circuit-power ratio does not fall below the following limit value:

$$k_{kl} \geq 50 \qquad \text{(B.1-2)}$$

If the network impedance is strongly inductive, the assessment by means of the factor k_{kl} is too conservative, i.e. that the apparent feed-in power is more strongly limited than required for the observance of the voltage change. In such a case, a computation should be carried out on the basis of the complex network impedance with its phase angle ψ_{kV}. This computation, though it also still represents an approximation, provides a much more accurate result than a computation based on power values alone.

$$\Delta u_{aV} = \frac{S_{A\max} \cdot \cos(\psi_{kV} + \varphi)}{S_{kV}} \qquad \text{(B.1-3)}$$

with φ being the phase angle between current and voltage of the generating plant with maximum apparent power S_{Amax}. If the value obtained for cos ($\psi_{kV}+\varphi$) is smaller than 0.1, it should be estimated at 0.1 in order to take the uncertainties associated with this computation into consideration. The explanations given in Annex B.5 as to the reference arrow system can be used to determine the sign of the phase angle. More detailed information for wind energy plants is provided in Annex B.1.1.

According to the reference arrow system applied in the guideline, the phase angle φ of the generating plant with active power feed-in (-P) is to be applied with a positive sign in case of withdrawal of inductive reactive power and with a negative sign in case of withdrawal of

capacitive reactive power. The network impedance with the related network impedance angle ψ_{kV} shall always be assumed to be inductive.

The tolerances of the operating voltage in the low-voltage network are imperatively specified in the DIN IEC 60038 and EN 50160 standards. Throughout Europe, the rated voltage is 400 V between the outer conductors, corresponding to 230 V between the outer conductor and the neutral conductor or earth. The tolerance limit of the operating voltage is ± 10 % U_n.

An extension of the admissible range of the active factor cos φ can be determined in cooperation with the network operator by taking the following fringe conditions into consideration:

- admissible tolerance of the network voltage of the network operator’s low-voltage network of 230 V ± 10 %
- fluctuation in the low-voltage network between low and high demand
- feed-in power and active factor of the generating plants on their low-voltage side.

The admissible positive voltage change is obtained from the difference between the positive tolerance of the low voltage of 230 V +10 % and the highest voltage determined in the low voltage network (usually during hours of low demand, possibly with feed-in).

The admissible negative voltage change is obtained from the difference between the negative tolerance of the low voltage of 230 V - 10 % and the lowest voltage determined in the low-voltage network (usually during hours of high demand, possibly without feed-in).

Depending on the volume of generating capacity, the adjustable range of the active factor may be obtained from the above.

The voltage conditions existing in the low-voltage network are represented in the diagram of Figure B.1. During periods of high demand, the farthest consumer is provided with the lowest operating voltage. Due to the voltage drops on the lines, the operating voltage is the lower the farther the consumer from the transforming substation. During hours of low demand, these voltage drops do not occur and the operating voltage is almost constant throughout the network.

The network operator will endeavour to select the operating voltage of the medium network and the tapping of network transformers in such a way that the operating voltage of the farthest customer facility is still above the lower tolerance limit, and that the majority of customer facilities closer to the transforming substation is provided with an operating voltage that is not too far above the rated voltage.

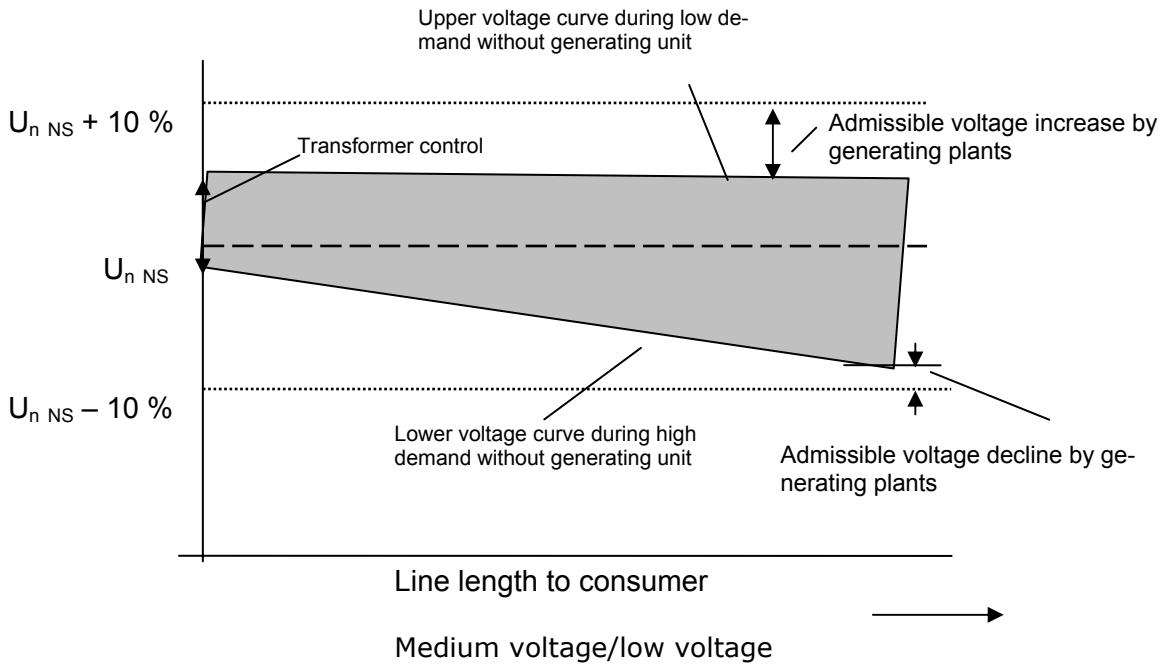

Figure B.1: Schematic diagram of voltage conditions for consumers in the low-voltage network

$U_{n\ NS}$: Rated voltage of the low-voltage network (400 V: conductor-conductor; corresponding to 230 V conductor-neutral)

In addition, the network transformers' control is implemented in taps; medium-voltage at the bus-bar may vary within a tapping (usually between 1 % and 1.5 %). Thus, the shaded range shown in Figure B.1 is obtained with the operating voltage of the connected consumers depending on the load and location.

In normal operation, a generating plant connected to the bus-bar of the transforming station gives rise to a change of the bus-bar voltage only within a tap of the network transformer's tapping switch control. The selected admissible value of 2 % will ensure that the tapping switch must not switch-over inadmissibly often. This limit value can also be observed in the case of high feed-in power if the active factor cos φ is ≈ 1, as in this case only voltage drops occurring in the resistive part of the short-circuit impedance contribute to the voltage change.

However, if the network operator requires that inductive or capacitive reactive power be withdrawn, the higher voltage drops in the reactive shares of the short-circuit impedance will become decisive, and the expectation values of the voltage change will increase. In normal operation, this will only lead to a more frequent operation of tap changers. In the event of disturbances, e.g. in the case of shutdown of a generating plant due to distur-

bances, the fact that the tap changer has specific change-over times of about 10 s per tap has to be taken into consideration. During this time, the operating voltage changes according to the adjusted reactive power:

- Overexcited generator operation

  The withdrawal of capacitive reactive power (overexcited generator operation) would lead to an increased voltage on the medium-voltage bus-bar which is controlled through the tap changer control by an increase of the network transformer’s transformation ratio. A loss of generating capacity will then give rise to a voltage drop; the result of this may be that the lower tolerance limit of the consumer voltage is undershot for a short time.

- Under-excited generator operation

  The withdrawal of inductive reactive power (under-excited generator operation) would lead to a voltage decrease on the medium-voltage bus-bar, which is controlled through the tap changer control by a reduction of the network transformer’s transformation ratio. A loss of generating capacity will then give rise to a voltage increase; the result of this may be that the upper tolerance limit of the consumer voltage is exceeded for a short time.

Short-time changes may have an impact on the operational security of electronic computer or control installations and should remain within the limits recommended by the manufacturers of those installations. This will usually be ensured if the recommended value of a voltage increase or decrease of 2 % is observed. However, when selecting a required reactive power feed-in, the network operator should take account of the impact of a generating plant’s failure on the short-term voltage change.

B. 1.1 Connection to the medium-voltage network

The power injections of generating plants changes the network’s operating voltage. Based on the formula (B.1-3), the voltage change at the junction point in case of inductive reactive power withdrawal can be expressed as follows:

$$\Delta u_a = \frac{S_{A\max} \cdot (R_{kV} \cdot \cos|\varphi| - X_{kV} \cdot \sin|\varphi|)}{U^2} \qquad \text{(B.1-4)}$$

As the equation shows, the voltage change may become positive or negative when the first term in the enumerator equals or becomes smaller than the second one, which is possible if cos φ is sufficiently small, hence if there is a sufficiently high withdrawal of inductive reactive power.

However, a high reactive power withdrawal has considerable drawbacks in practice. On the one hand, as is generally known, line losses are increased and the transmission capacity of lines is decreased. On the other hand, voltage changes occurring in such a case remote from the junction point may be larger than at the junction point itself, as the R/X ratio (which is important according to the equation (B.1-4)) is by no means the same for all operating equipment along the route of power transmission. The following equation applies in case of withdrawal of capacitive reactive power:

$$\Delta u_a = \frac{S_{A\max} \cdot (R_{kV} \cdot \cos|\ \varphi\ | + X_{kV} \cdot \sin|\ \varphi\ |)}{U^2} \qquad \text{(B.1-5)}$$

The equation shows that the withdrawal of capacitive reactive power adds to the voltage increase; this fact is to be taken into consideration in case of variable reactive power withdrawal.

The formulas given under B.1-4 and B.1-5 are practicable approximations where the angle between the network-bus-bar-voltage and the voltage at the junction point is supposed to be zero and the impact of the voltage change on the voltage and the current at the junction point is neglected (linearization of a non-linear load-flow problem). The voltage changes calculated according to these formulas are therefore slightly larger than the exact values and thus on the „safe side“. Nevertheless, this fact should be taken into consideration if the results calculated by means of these formulas are compared to those obtained by the complex load-flow analysis.

A usual approach to the calculation of the voltage change is also

$$\Delta u_a = S_{A\max} \frac{S_{k\,SS} - S_{kV}}{S_{k\,SS} \cdot S_{kV}} \qquad \text{(B.1-6)}$$

with S_{kSS} = short-circuit power on the medium-voltage bus-bar of the transforming station. This formula is based on the assumption of constant voltage on the bus-bar.

Due to the great number of calculated case studies, it can be assumed that the tolerances given in the relevant provisions (mainly in EN 50160) in terms of the operating voltage both in the medium and in the low-voltage network, are maintained if the voltage change attributable to the operation of all generating units in this medium-voltage network is limited to a value of 2 %. The network operator may require that the voltage change be less than 2 % if this is necessary in exceptional cases due to the type of network and its operating mode.

Should the considerations described so far not enable the desired generating capacity to be connected, measures for network reinforcement usually need to be carried out. The sim-

plest approach is to shift the junction point towards a higher short-circuit power, hence to connect the generating plant through a separate line to the medium-voltage bus-bar of the transforming station or even feed directly into the high-voltage network via a separate customer transformer.

Attention should be paid to the fact that the decision about the permissibility of the connection of a generating plant strongly depends on the shape of the medium-voltage network, the existing network elements, and on the network's operating mode. Therefore, the information given here may be modified in a case-by-case approach.

B 1.2 Connection to the bus-bar of a transforming station

If the generating plant is directly connected to the bus-bar of a transforming station, the voltage change does not take effect as it is controlled by the network transformer. However, that is only true if the change of the feed-in power is not faster than the response of the controller. The limitation of the maximum rate of rise of the power fed in shall ensure that a control of voltage changes is achieved on the bus-bar.

In the event of a sudden loss of feed-in power, the bus-bar controller cannot regulate the resulting voltage jump for inertia reasons. Therefore, the voltage jump given in the Section „Sudden voltage changes“ may be a limiting criterion for the feed-in power.

B.2 As to Section 2.4 Network disturbances

B 2.1 Calculation bases for sudden voltage changes

As a function of the short-circuit power S_{kV} of the system operator's network and the rated apparent power S_{rE} of a generating unit, a sudden voltage change caused by a connection can be estimated at

$$\Delta u_{\max} = k_{i\max} \frac{S_{rE}}{S_{kV}} \qquad \text{(B.2-1)}$$

The factor k_{imax} is referred to as „maximum current spike factor“ and indicates the ratio between the highest current occurring during the switching operation (e.g. starting current I_a) and the rated current of the generator unit or of the generating unit I_{nG}, such as for instance:

$$k_{i\max} = \frac{I_a}{I_{nG}} \qquad \text{(B.2-2)}$$

Results obtained from a calculation using this „maximum current spike factor“ represent an upper estimate and are thus basically on the „safe side“. The following reference values shall apply to this factor:

- k_{imax} = 1.2 for synchronous generators with fine synchronization, inverter,
- k_{imax} = 1.5 for double-fed asynchronous generators with fine synchronization and inverter in the rotor circuit,
- k_{imax} = 4 for asynchronous generators (cage rotor with current limitation), which are connected at 95 to 105 % of their synchronous speed, if there are no further details available as to the kind of current limitation. With regard to short-term transient phenomena, the condition described hereinafter in terms of very short voltage drops must be observed.
- k_{imax} = 8 for asynchronous generators which are started from the network if I_a is unknown.

Asynchronous machines which can be connected to the network with approximate synchronous speed, may give rise to very short voltage drops as a result of internal transient phenomena. Such a voltage drop may amount to double the usually admissible value, hence 4 %, unless its duration exceeds two full oscillations and the subsequent deviation of the voltage as compared to the value prior to the voltage drop exceeds the usually admissible value.

For the connection, shutdown and switch-over of wind energy plants, there are two specific „network dependent factors“ k_f (flicker step factor) and k_u (voltage step factor) available (to be verified by the manufacturer) which enable the assessment of switching operations to be carried out in the same way as described above, and which take account of the short-term transient phenomena mentioned before. The two factors k_f and k_u can be determined by means of a fictitious network. They are indicated as a function of the network impedance angle ψ for every plant type in the inspection record according to [18] for starting operations with start-up and rated wind, for switch-over of generator steps, and switching off with nominal power.

According to the inspection record [21] , the most unfavourable factor k_u is to be used for the assessment of sudden voltage changes at the network connection point with the relevant network impedance angle. It makes it possible to calculate formally in the same way as with

[18] Annex B of „Technische Richtlinie für Windenergieanlagen“ Part 3: Bestimmung der Elektrischen Eigenschaften – Netzverträglichkeit (EMV) -

equation (B.2-1) a fictitious „equivalent voltage change“ which also must not exceed a limit value of 2 % (like Δ_{umax}).

$$\Delta u_{ers} = k_u \cdot \frac{S_{rE}}{S_{kV}} \qquad \text{(B.2-3)}$$

Usually, during starting operations, the factor k_u is most unfavourable at rated wind. A coincidence of switching operations of several generators at a junction point leads to a multiple of a voltage change caused by a generator; therefore, it should be avoided with a view to minimizing the impact on the system operator's network. A technical means to this end is the graduation in time of the different switching operations. The interval Δt_{min} in seconds between two switching operations shall be determined by the magnitude of the voltage changes caused by them, and must at least be 3 minutes with ΔU_{max} = 2 %. In case of minor voltage changes, smaller intervals will be sufficient according to equation B.2-4.

$$\Delta t_{min} = 23 \cdot (100 \cdot \Delta u)^3 \quad \text{in [seconds]} \qquad \text{(B.2-4)}$$

For the assessment of the connection of one or several generating units, the limit value P_{lt} ≤ 0.46 is to be observed with regard to flicker-effective voltage changes caused by switching operations.

The long-term flicker emission P_{lt}, attributable to switching operations of one single generating unit is calculated by using equation (B.2-5):

$$P_{lt} = 8 \cdot N_{120}^{0,31} \cdot k_{f(\psi)} \cdot \frac{S_{rE}}{S_{kV}} \qquad \text{(B.2-5)}$$

The long-term flicker emission P_{lt}, attributable to switching operations of several generating units, is calculated by using equation (B.2-6), N_{120} being the maximum number of switching operations of generating units within 120 minutes. N_E represents the number of generating units in a junction point.

$$P_{lt} = \frac{8}{S_{KV}} \cdot \left(\sum_{i=1}^{N_E} N_{120,i} \cdot (k_{f,i(\psi)} \cdot S_{rE})^{3,2}\right)^{0,31} \qquad \text{(B.2-6)}$$

The factor N_{120} and its application is described in Annex B.2.2, and can be taken from the extract from the inspection record [19].

The long-term flicker must be smaller than P_{lt} = 0.46.

[19] Annex B of the „Technische Richtlinie für Windenergieanlagen“ Part 3: Bestimmung der Elektrischen Eigenschaften – Netzverträglichkeit (EMV) -

B.2.2 Sudden voltage changes

During the motor-driven start-up of asynchronous machines, the current amounts to a multiple of the rated current. Therefore, with a view to avoiding high current loading and voltage drops in the network, it is not recommended using motor-driven start-up of asynchronous generators. However, a current surge (though very short, i. e. with a duration of a few half-oscillations) of the order of the starting current also occurs during connection with synchronous speed. If it leads to inadmissible repercussions on the network, a bridgeable reactor shall be provided for its limitation.

Connections and change-over of generating plants with asynchronous generators are accompanied by relatively complicated transient phenomena. To calculate these switching operations for wind energy plants, the voltage step factor $k_{U(\psi)}$ was introduced which is dependent on the phase angle ψ of the network impedance. This factor is derived from measurements during the switching operations, and added in tabular form to the data of the generating plant as a function of ψ. The factors $k_{U(\psi)}$ and $k_{f(\psi)}$ are especially used for wind energy plants, and indicated for the following switching operations for the network impedance angles 30°, 50°, 70° and 85°:

- Switching-on at start-up wind
- Most unfavourable case for switch-over of generator steps
- Switching-on at rated wind
- Switching-off at rated wind

For the assessment of the network repercussions produced, such as sudden voltage changes in this case, the most unfavourable (largest) factor is to be used. For network impedance angles deviating from the aforementioned angles, an interpolation is admissible.

The assessment of the flicker effectiveness of voltage changes attributable to switching operations is carried out by means of the flicker step factor $k_{f(\psi)}$ and of the factor N_{120}. The limit value to be observed in case of flicker effects caused by switching operations is identical with the limit value for flicker effects during continuous operation of plants (long-term flickers).

For each of the switching types mentioned above, flickers are assessed with the related factor N_{120} and the flicker step factor $k_{f(\psi)}$. The factor N_{120} describes the maximum number of the respective type of switching carried out within 120 minutes. The highest value calculated is decisive for the flicker assessment. For network impedance angles deviating from the aforementioned angles, an interpolation is admissible.

B.2.3 Long-term flicker

Flicker describes a phenomenon which is characterized by voltage fluctuations whose frequency and amplitude are so large that electric lamps supplied by this voltage show fluctuations in the lighting density. Further details are given in [20]. The measured variable and the assessment criterion in terms of flicker caused by generating plants are the long-term flicker interference factor A_{lt} or the long-term flicker strength P_{lt}.

The flicker intensity felt by a human being is proportional to the flicker interference factor A and (almost) linearly dependent on the frequency of voltage fluctuations and (almost) cubically dependent on their amplitude. The amplitude, on the other hand, depends on

- the ratio between the apparent generator output and the short-circuit power,
- the drive-specific characteristics of the plant, expressed by the flicker coefficient c (previously plant flicker coefficient)

The flicker coefficient c is indicated, like the voltage step factor $k_{U(\psi)}$, for the network impedance angles 30°, 50°, 70° and 85° at different average annual wind speeds and is primarily of relevance to wind energy plants (mainly to those with asynchronous generators). The network impedance angle ψ_k is determined on the basis of system analyses and can be interpolated for angles deviating from those mentioned above. If the average annual wind velocity is not exactly known, the most unfavourable (largest) factor is to be applied. The flicker coefficient c describes the flicker-effective characteristics of the machine which caused the flicker occurrence, and depends essentially on the flicker-effective phase angle φ_f of the respective plant. The flicker coefficient is given in the inspection record [21]. The common flicker effect of several generating units connected at a junction point can be calculated according to (2.4.2-3) or (2.4.2-4) from the flicker interference factors of the plants, with a quadratic summation of the P_{lt} values. This is attributable to the fact that (according to all investigations carried out to date) the flicker originating from several wind energy plants is subject to a stochastic superposition (similar to the superposition of noise voltages or of alternating voltages of different frequencies).

The common flicker effect of several generating plants connected at a junction point is determined by applying the quadratic summation of individual values according to equation

[20] „Technical Rules for the Assessment of Network Disturbances“, 2nd edition of 2007, issued by VDN

2.4.2-3. This can be explained by the superposition behaviour of generating units whose emissions are not independent of one another. In the case of individual emissions which are independent of one another in terms of time, a cubical superposition behaviour would have to be assumed.

B.2.4 Harmonics and inter-harmonics

The relevant provisions (e.g. the European standard EN 50160 „Voltage characteristics of electricity supplied by public distribution networks“) prescribe the observance of defined limit values for harmonic voltages both for the low and the medium-voltage network. These values are to be maintained at both voltage levels with a sufficiently high probability. At the low-voltage level, voltage distortions of all superimposed voltage levels sum up. The admissible harmonic voltages are already utilized to a large extent by the connected consumption devices. Therefore, the harmonic voltages additionally injected by generating plants at the medium-voltage level must be limited to admissible values.

Ordinal number	Admissible harmonic voltage on the medium-voltage network [% U_n]
5	0.5
7	1
11	1
13	0.85
17	0.65
19	0.6
23	0.5
25	0.4
$25 < \nu < 40$ 1)	0.4
even-numbered	0.1
$\mu < 40$	0.1
$\mu, \nu > 40$ 2)	0.3

1) odd-numbered *2) measuring scale 200 Hz*

[21] Annex B of „Technische Richtlinie für Windenergieanlagen“ Part 3: Bestimmung der Elektrischen Eigenschaften – Netzverträglichkeit (EMV) -

Table B.2.4-1: Maximum shares of harmonic voltages which may be produced by all generating plants in a DC connected medium-voltage network

The shares of harmonic voltages (shown in Table B.2.4-1) which are produced by generating plants within the medium-voltage network, are determined as follows:

- For harmonic voltages of converter-specific orders, 0.5 % of the network voltage were applied as admissible levels for the 5th order, and 1 % from the 7th to the 11th order. The stronger emission limitation for the 5th order network harmonics is attributable to the usually strong preliminary distortion of the network voltage at this frequency. For higher order harmonics, the admissible level decreases with $11/\nu$.
- For untypical harmonics of even-numbered order and for inter-harmonics, the admissible level was set at 0.1 % of the network voltage. These frequencies must be specifically limited to avoid disturbances of audio-frequency remote control installations. They are hardly produced by properly functioning inverters, anyhow.
- For the frequency range of 2 kHz to 9 kHz, which can be of relevance to the assessment of pulse-modulated inverters, the value of 0.3 % of the network voltage, mentioned in IEC 61000-2-2, was applied to a range of 200 Hz. Within this frequency range, an arithmetic superposition of harmonic voltages at the different voltage levels can be excluded. Centralized ripple control installations are not operated within this frequency range. Therefore, the limit value of 0.3 % can be fully utilized by the plants connected to the medium-voltage network.

If different generating plants are directly connected trough separate, long lines (overhead lines of more than 2 km, cables of more than 6 km) to the bus-bar of a transformer station supplying a network with a substantial share of cables (Q_C > 3 MVar), the mentioned limit value of 0.3 % for the generating plants can be fully utilized on every one of those lines. If there exists an own line to the bus-bar (which then represents the junction point), voltages of higher frequencies do not occur in such networks to a noticeable extent as they are short-circuited by the network capacity.

The related harmonic currents mentioned in Table 2.4.3-1 are obtained if harmonic voltages on the inductive network are limited to the values given in Table B.2.4-1. The table indicates the sum of harmonic currents admissible for an ordinal number which may be produced by the entirety of all plants directly connected to a medium-voltage network. The indicated admissible harmonic currents relate to the junction point of the generating plant with the medium-voltage network. These values may be achieved through adequate dimensioning of the generating units or by means of centralized measures, such as filter circuits.

If the generating plant consists of several generating units (e.g. wind farm), the harmonic currents fed into the medium-voltage network can be determined from the currents of the different generating units:

Line-commutated inverters (six or twelve-pulse)

Converter-typical harmonic currents (of 5th, 7th, 11th, 13th, etc. order) and untypical ones of very low order ($\nu < 13$) are added up arithmetically:

$$I_\nu = \sum_{i=1}^{n} I_{\nu i} \qquad \text{(B.2.4-1)}$$

For untypical harmonic currents of higher order ($\nu \geq 13$), the total harmonic current of an order equals the root of the sum of squares of the harmonic currents of this order:

$$I_\nu = \sqrt{\sum_{i=1}^{n} I_{\nu \cdot i}^{\,2}} \qquad \text{(B.2.4-2)}$$

Pulse-modulated inverters

For an ordinal number μ which is basically not integral but which also includes integral values for values of $\mu \geq 13$, the total current equals the root of the sum of squares of the currents of individual plants:

$$I_\mu = \sqrt{\sum_{i=1}^{n} I_{\mu \cdot i}^{\,2}} \qquad \text{(B.2.4-3)}$$

If untypical harmonic currents occur with such inverters for integral ordinal numbers of $\nu < 13$, these currents shall be added up arithmetically according to equation B.2.4-1. Harmonic currents above the 2nd order as well as inter-harmonics may be calculated according to equation B.2.4-3 if the pulse frequency of the converter is at least 1 kHz.

Should the admissible harmonic currents (or admissible currents of inter-harmonics) be exceeded, more detailed investigations within the generating plant may be required. In this context, account shall be taken of the fact that the aforementioned rules of harmonic current superposition have been chosen so as to apply to an inductive network impedance also in the case of higher frequencies. However, in large plants with a substantial share of cables, the cable capacity (mainly above 2000 Hz, i.e. at $\mu > 40$) at higher frequencies leads to a dissipation of feed-in currents of individual plants so that the harmonic currents of the entire generating plant may be lower than those assessed by the approximation equation.

The short-circuit power in medium-voltage networks used for the calculation of the admissible harmonic currents may vary between 20 and 500 MVA. Typically, it is between 50 and 200 MVA. It is advisable to make sure not to apply the rated short-circuit power of the medium-voltage plant but the real short-circuit power at the junction point.

If the admissible harmonic currents determined by the method described are observed by the plants which are to be connected, it is possible to guarantee with a sufficiently high probability that the admissible harmonic voltages are not exceeded in the network. Otherwise, more precise calculations need to be carried out which accurately model network conditions and take account of already existing or expected generators of harmonics.

Such detailed analyses may be essentially required for the frequency range above 2000 Hz, as the impedance curve is only slightly dependent there on the impedance value at 50 Hz. If the current values given in Table 2.4.3-1 cannot be observed for this frequency range, it is recommended determining the expected voltage levels by means of real network impedances at these higher frequencies. Further information on this subject is given in [22].

If this approach is not successful either, it is necessary to carry out remedial measures such as e.g. the reduction of harmonic currents fed into the network through installation of filters or increase of the admissible harmonic currents through connection to a point of higher short-circuit power.

Moreover, it is recommended examining in a case-by-case approach whether it is possible to use 12-pulse inverters for inverter installations from about 100 kVA (rated capacity) and 24-pulse inverters for installations of more than 2 MVA (rated capacity), if the pulse modulation technology is not applied, anyhow.

Under special circumstances, harmonics of higher frequency (i.e. within a range above 1250 Hz) may occur which are attributable to the fact that weakly damped resonances of subsystems are excited by commutation notches. In such a case, particular measures need to be carried out which are described in greater detail in [21].

B.3 Automatic re-closure

In case of an unsuccessful automatic re-closure after ***faults within the higher-voltage network*** (110, 220, 380 kV) two voltage drops take place in succession.

[22] „Technical Rules for the Assessment of Network Disturbances", 2nd edition 2007, issued by VDN

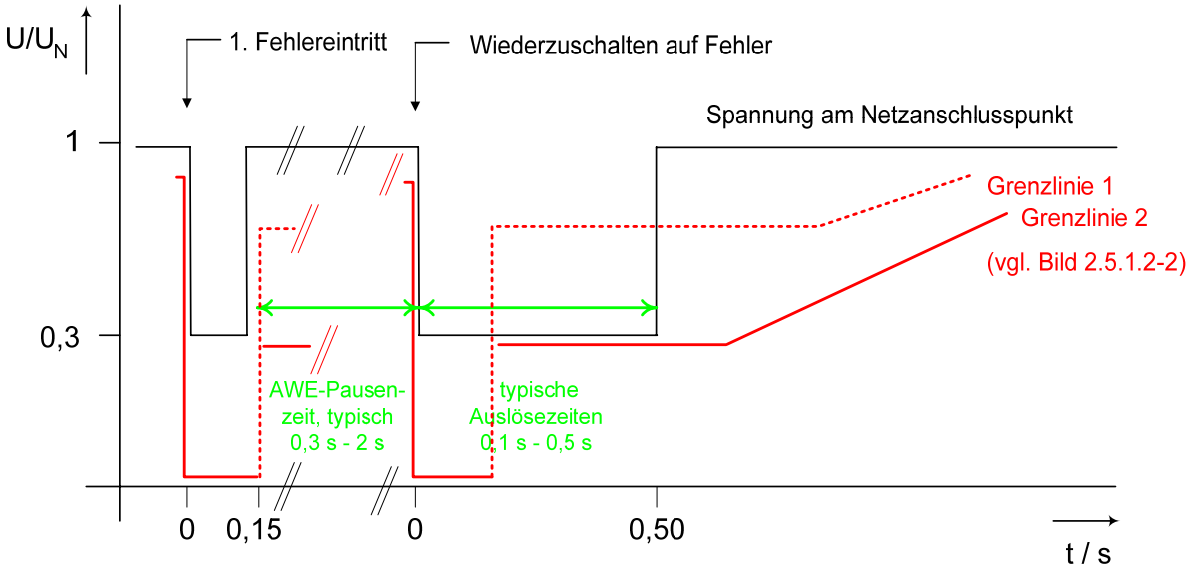

Figure B.3-1: Voltage curve in the case of unsuccessful auto-re-closure in the higher-voltage network

Figure B.3-1 shows the voltage curve which occurs in this case at the network connection point of generating plants. The volume of the voltage drop depends on the location of the fault as to the network connection point.

Figure B.3-1 also shows the general behaviour of the voltage with a protection of lines through distance protection equipment without signal transmission. The distance protection devices on both terminals of the line system which is to be protected are normally adjusted in an overlapping manner, i.e. 125 % of the line system are protected through fast response of the first zone. As a result, all faults on this line system are safely cleared through fast response. The inadvertent operation resulting from this operating mode in the case of faults „beyond“ the next bus-bar is put up with. During the auto-re-closure off-period which is typically 0.3 s. to 2 s., protection devices for the first zone switch over to standard setting with the usual range without taking automatic re-closure into consideration. That means that only about 85 % of the line system under consideration are subject to first zone time protection. Consequently, the protection device at one end of the line system will detect the fault within its first zone and rapidly clear it. However, the protection device at the other side of the line system can possibly recognize the fault, depending on the fault location, only outside its first zone, e.g. if the fault is not far from the counterpart substation. To ensure selectivity without taking account of automatic re-closure, fault clearance by this protection device is delayed, taking place for instance within 0.5 s, in accordance with the standard programme.

On condition of the proper functioning of all devices, it can be assumed that the first voltage drop will last only 150 ms, while the second voltage drop may possibly last with a time delay until the end of the second time step.

Moreover, the red lines in Figure B.3-1 show the boundary lines of the voltage up to which the generating plant with a network connection point in the medium-voltage network must not be disconnected from the network (cf. Section 2.5.1.2).

Should one of the devices participating in short-circuit interruption fail, the voltage drop during the first fault will not be terminated after 150 ms. In this case, the generating plant must not be disconnected if the voltage is above the curve shown in Figure 2.5.1.2-2 of Section 2.5.1.2

In the event of a fault on the upstream 110 kV line to which the generating plant is ultimately connected via the system operator’s network (see Figure B.3-2), false measurements of all distance protection devices initially occur due to interim injections. The magnitude of these false measurements depends on the proportion of short-circuit power of the supplying entities. If the network’s short-circuit power, as compared to the generating plant’s short-circuit power, is so large that the distance protection devices in the transforming stations A and B measure the fault in the overlapping area, the distance protection devices in the transforming stations A and B carry out automatic re-closure. If both circuit breakers in the transforming stations A and B are open, the distance protection device in transforming station C can now correctly measure the fault and give an OFF command. In case of a spur connection of transforming stations, the OFF command opens the circuit breaker of the medium-voltage bay supplied by the generating plant. Thus, the generating plant is disconnected from the network. This applies if the generating plant is connected to the medium-voltage bus-bar of a transforming station via a separate circuit-breaker bay.

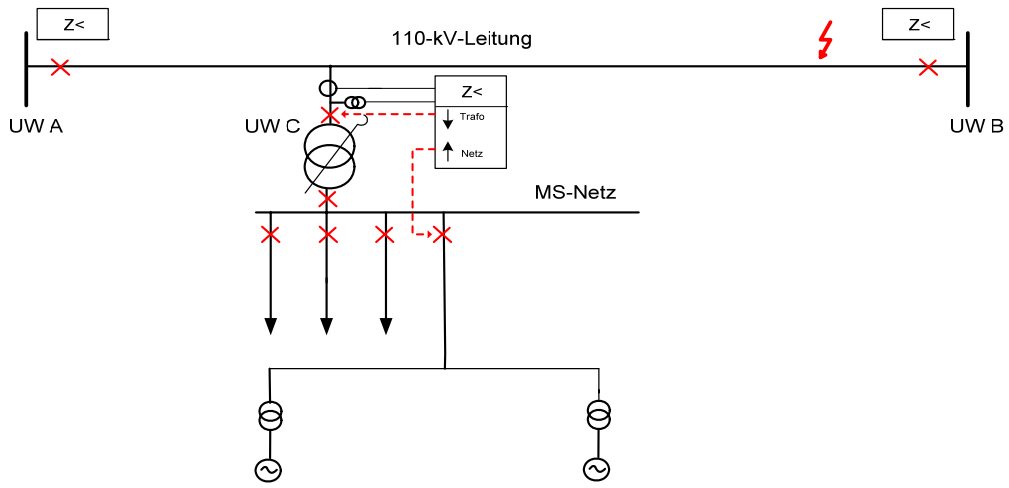

Figure B.3-2: Fault on the upstream 110 kV line

If a generating plant connected to the medium-voltage network is to participate in voltage support in the event of a fault on the network operator’s demand, consideration is to be given to the fact that the OFF command for transforming stations with spur connection is transferred by the distance protection relay to the transfer circuit-breaker e.g. by means of binary signal transmission. This is required because otherwise the generating plant would continue to feed energy onto the fault and, as a result, the fault would last longer. Moreover, electric arc quenching is no longer possible during the cut-off voltage pause in the case of relevant energy input.

In the ***event of faults within the medium-voltage network***, supplied by the generating plant, it is basically possible for generating plants to disconnect from the network as in this case a disconnection does not have any impact on the system stability of the higher-voltage network. However, a similar voltage profile may come about at the network connection point as in the case of automatic re-closure in the higher-voltage network. Consequently, the voltage profile does not enable the voltage level where the fault occurred to be detected. Therefore, the same requirements as described above in terms of disconnection from the network must be applied. Furthermore, it has to be noted that after unsuccessful automatic re-closure (ARC), a further automatic re-closure is carried out after approximately 15 … 20 s. During the second ARC, generating plants may then disconnect from the network (see B.3-3). Moreover, longer release times need to be taken into consideration in the event of faults within the medium-voltage network.

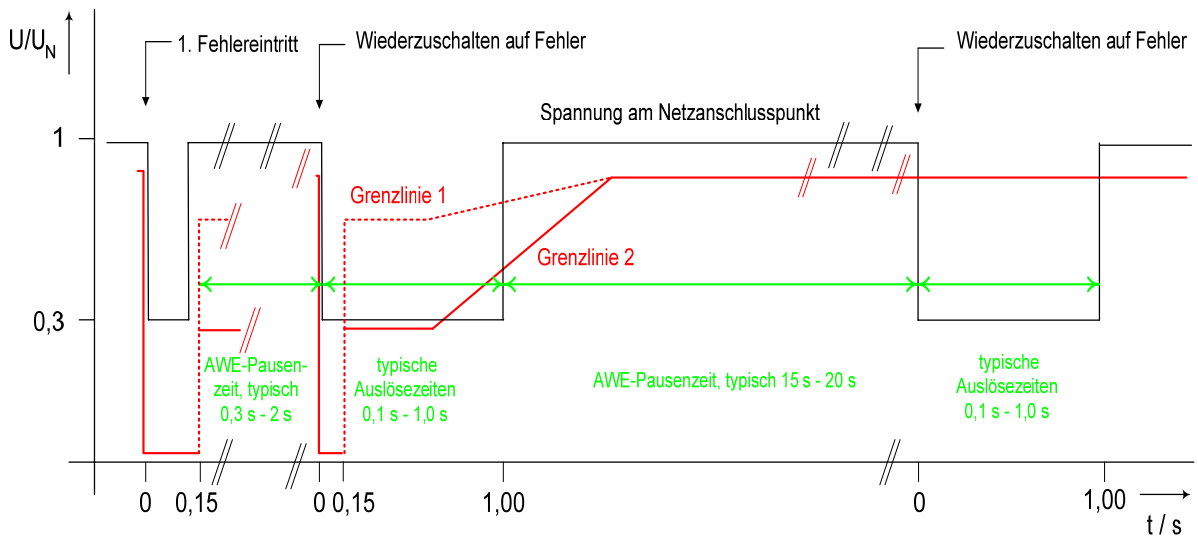

Figure B.3-3: Voltage curve in the event of an unsuccessful double automatic re-closure in the medium-voltage network

B.4 Reference arrow system

For data on directions and phase angles, the customer reference arrow system is applied.

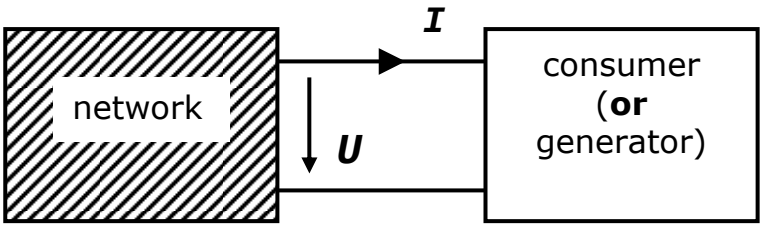

Figure B.4-1: Consumer reference arrow system

Hereinafter, the consumer reference arrow system is applied to customer facilities connected to the network as well as to generating plants. Currents and voltages in arrow direction are counted positively.

For representation in quadrants, a power circuit is chosen whose representation is compatible with mathematical representations of trigonometry and complex numbers. The current vector is always located at the real axis (3 o'clock) while the location of the voltage vector corresponds to the apparent power and to the phase angle. Like in mathematics, angles are counted positively in a counter-clockwise direction. The angle from the current vector to the voltage vector is defined as phase angle.

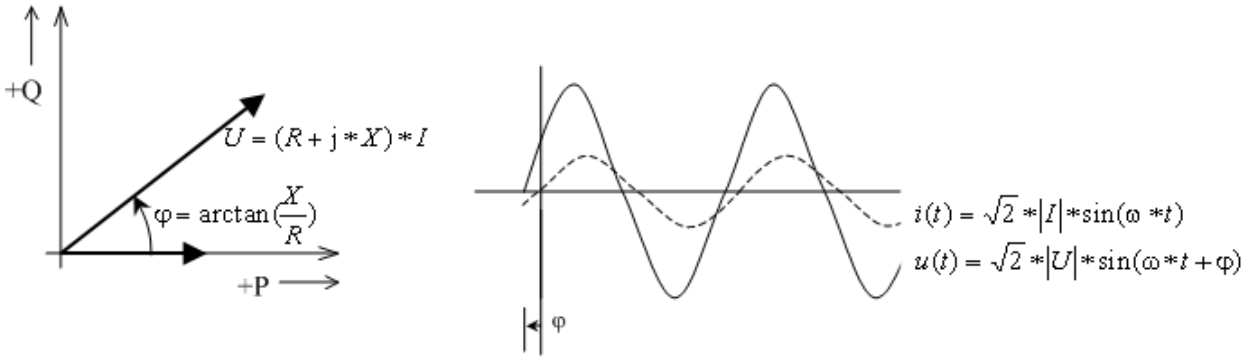

Figure B.4-2: Example: Ohmic-inductive load

The different „operating conditions“ are represented in the four quadrants I to IV. Quadrants are denominated in an anticlockwise sense in accordance with mathematical usage.

A power station with a synchronous generator connected to the network is in quadrant III if the synchronous generator is overexcited, and in quadrant II if the synchronous generator is under-excited.

Note: No confusion should be caused by the fact that the under-excited operating condition in quadrant II in the output diagram of a synchronous generator is also referred to as „capacitive operation“. This is attributable to the fact that the generator reference arrow system is usually applied to synchronous generators.

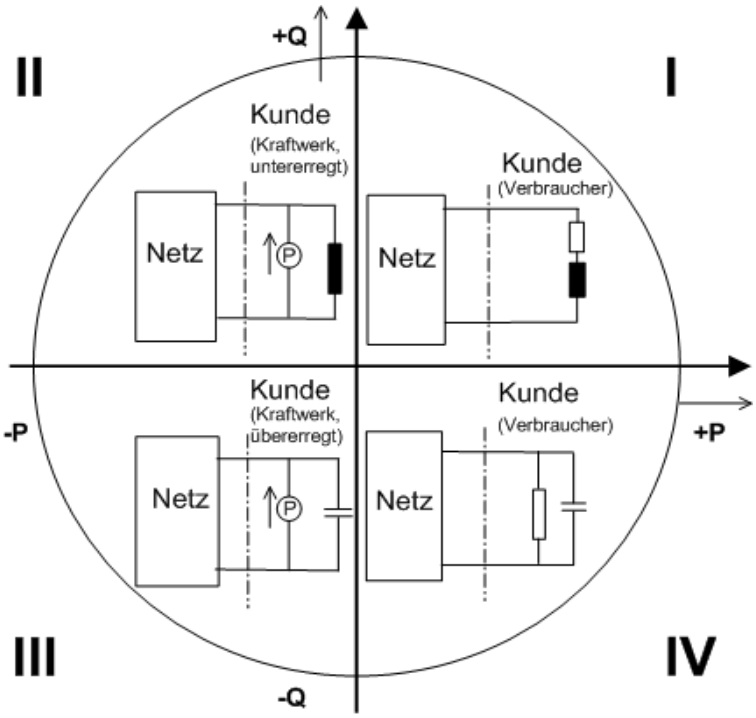

Figure B.4-3: Representation in the consumer reference arrow system

C Connection examples

Figures C.1 and C.2 show the basic points of connection to the network for generating plants.

C.1 Network connection point in the medium-voltage network

C.2 Network connection point at the medium-voltage bus-bar of a transforming station

Figures C.3 to C.10 show possible forms of realizing the connection of generating plants with regard to the concurrence of transfer switchgear according to Section 3.1.2, coupling switches according to Section 3.1.3 and protection equipment according to Section 3.2.3. The protection devices are displayed where the measured quantities are recorded. A broken line shows the chain of effects on the relevant switching device. The forms of realization shown as an example in these figures may be modified in accordance with local conditions.

C.3 Customer facility connected to the medium-voltage network with a generating plant with circuit breaker and a generating unit without possibility of isolated operation

C.4 Customer facility connected to the medium-voltage network with a generating plant with load disconnector and a generating unit without possibility of isolated operation

C.5 Generating plant connected to the medium-voltage network with circuit breaker and several generating units without possibility of isolated operation

C.6 Generating plant connected to the medium-voltage network with load disconnector and several generating units without possibility of isolated operation

C.7 Customer facility connected to the medium-voltage network with a generating plant with one generating unit and capability of isolated operation via a low-voltage side coupling switch

C.8 Customer facility connected to the medium-voltage network with a generating plant with one generating unit and capability of isolated operation via a low-voltage side coupling switch

C.9 Generating plant connected to the medium-voltage network with circuit breaker and one or several generating units without possibility of isolated operation

C.10 Generating plant connected to the medium-voltage bus-bar of a transforming station with one or several generating units without possibility of isolated operation

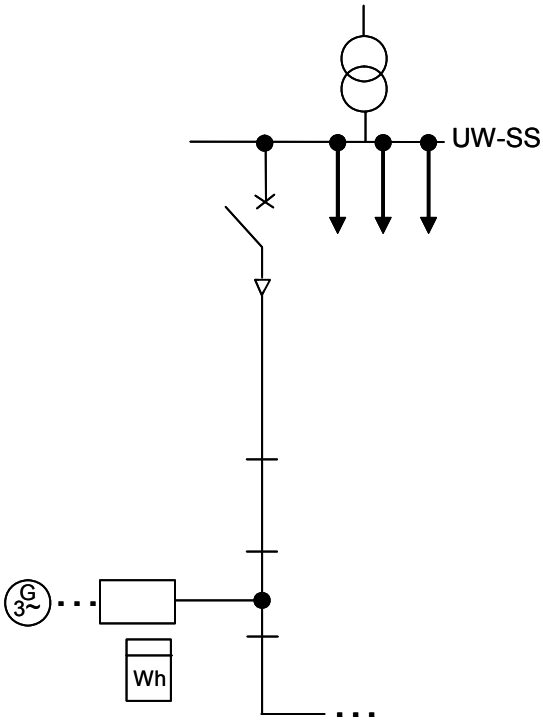

Legende:

- Kabelendverschluss
- Trafostation
- Anschlussanlage
- Abrechnungszählung
- Erzeugungseinheit(en)

Figure C.1 Network connection point in the medium-voltage network

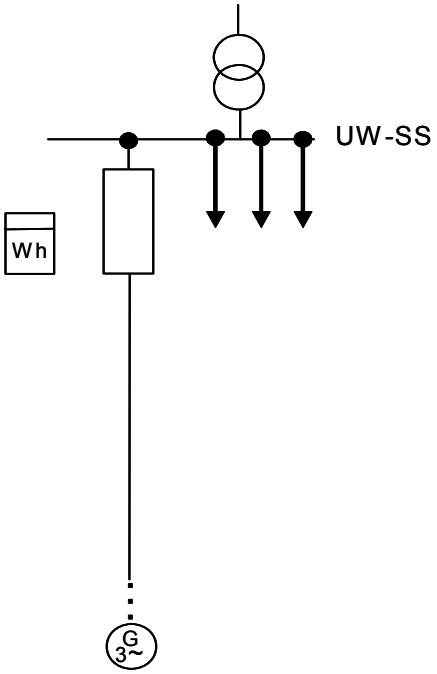

Figure C.2 Network connection point on the medium-voltage bus-bar of a transforming station

Note: According to the specifications of the network operator, the connection facility is to be designed as transfer station or as a separate medium-voltage bay

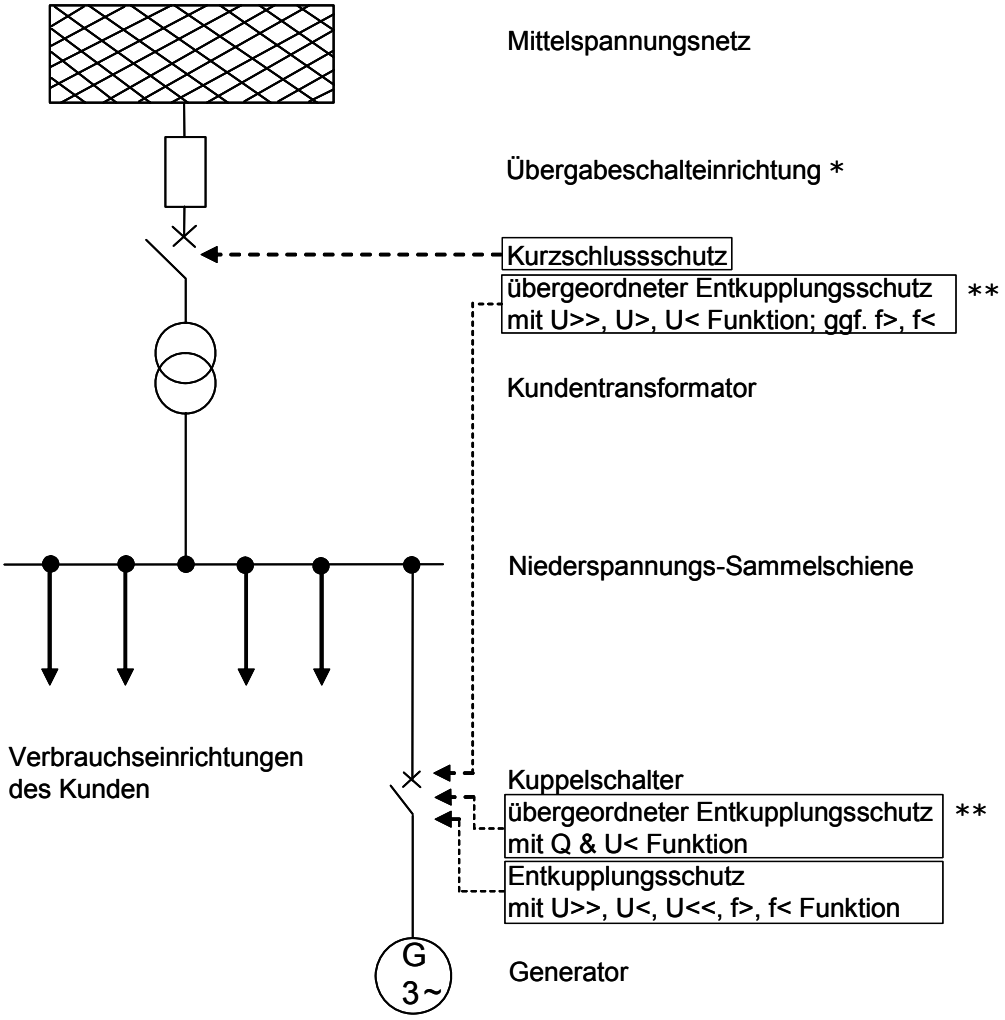

Figure C.3: **Customer facility connected to the medium-voltage network with a generating plant with circuit breaker and one generating unit without capability of isolated operation**

* In consultation with the network operator, the circuit breaker may also assume the function of transfer switching device

Note: To this end, the circuit breaker must be designed as a plug-in unit or with a superordinate isolator/load disconnector

** on request of the network operator

Note: Where necessary, a rise-in-frequency and an under-frequency protection relay need to be additionally installed for the superordinate protective disconnection device. The use of this function will then be determined by the network operator.

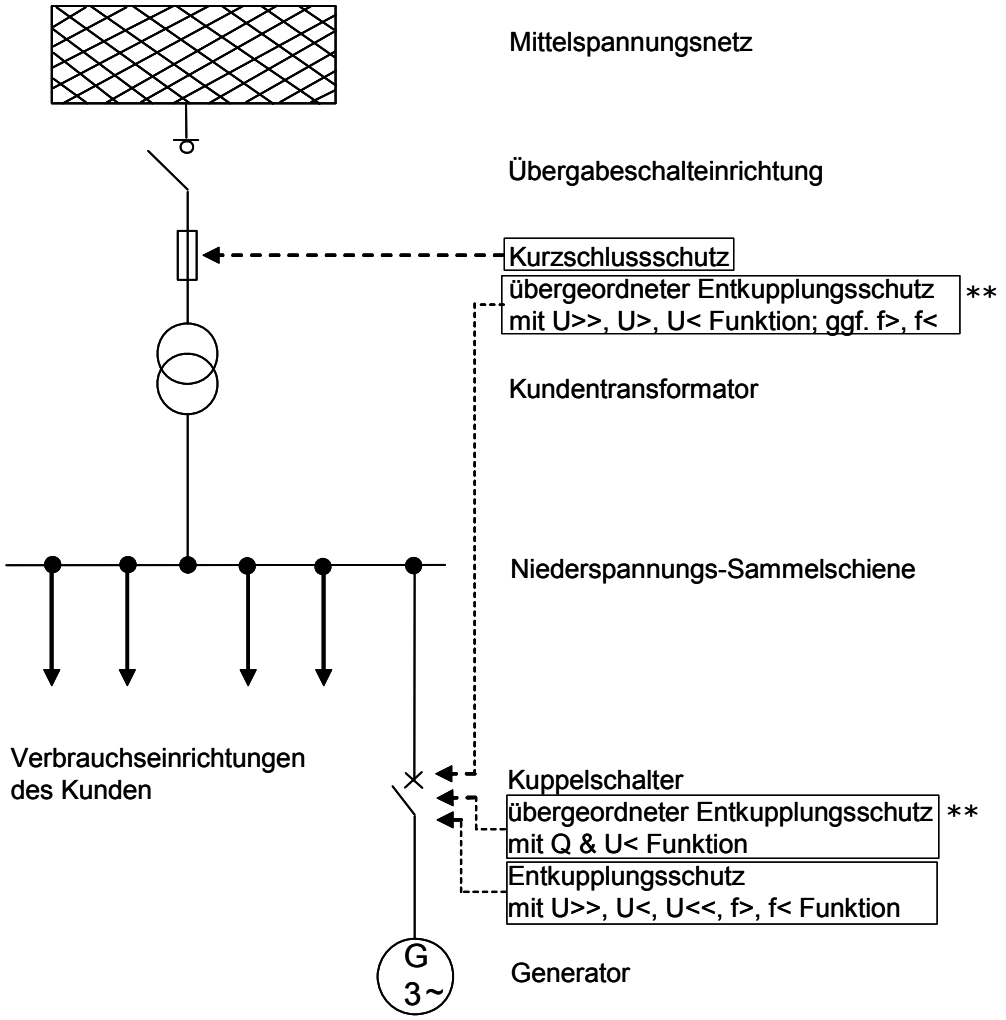

Figure C.4: **Customer facility connected to the medium-voltage network with a generating plant with load disconnector and one generating unit without possibility of isolated operation**

** on request of the network operator

Note: Where necessary, a rise-in-frequency and an under-frequency protection relay need to be additionally installed for the superordinate protective disconnection device. The use of this function will then be determined by the network operator.

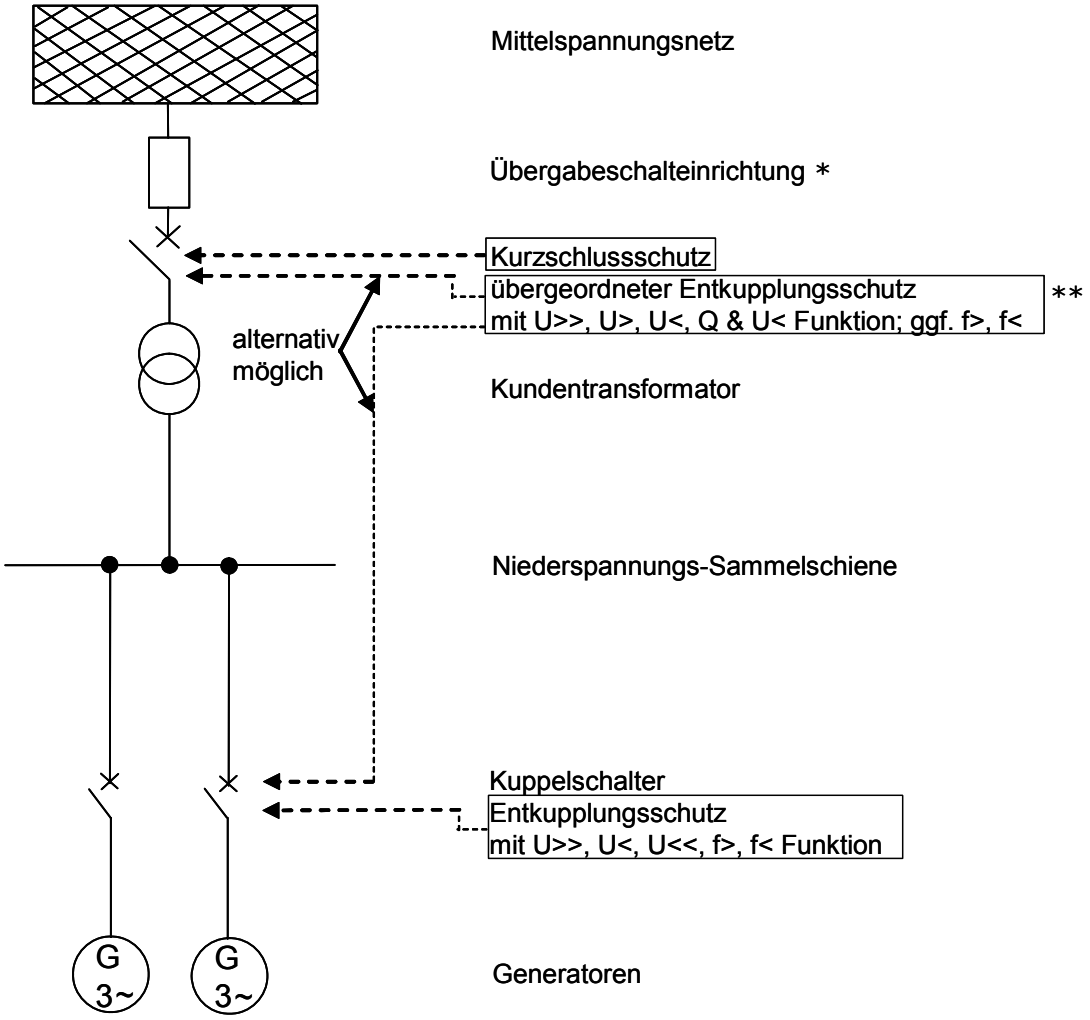

Figure C.5: **Generating plant connected to the medium-voltage network with circuit breaker and several generating units without possibility of isolated operation**

* In consultation with the network operator, the circuit breaker may also assume the function of transfer switching device

Note: To this end, the circuit breaker must be designed as a plug-in unit or with a superordinate isolator/load disconnector.

** on request of the network operator

Note: Where necessary, a rise-in-frequency and an under-frequency protection relay need to be additionally installed for the superordinate protective disconnection device. The use of this function will then be determined by the network operator.

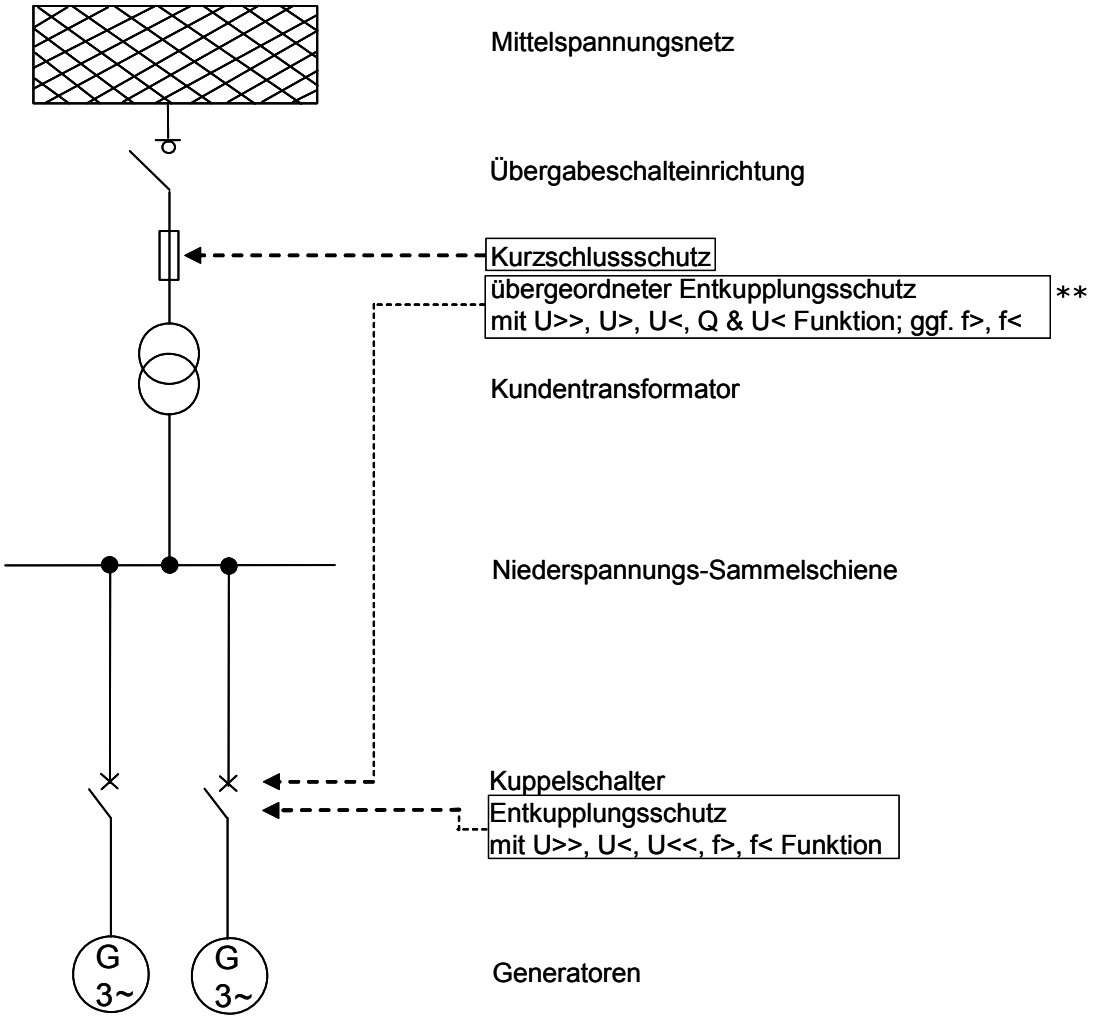

Figure C.6: **Generating plant connected to the medium-voltage network with load disconnector and several generating units without possibility of isolated operation**

** on request of the network operator

Note: Where necessary, a rise-in-frequency and an under-frequency protection relay need to be additionally installed for the superordinate protective disconnection device. The use of this function will then be determined by the network operator.

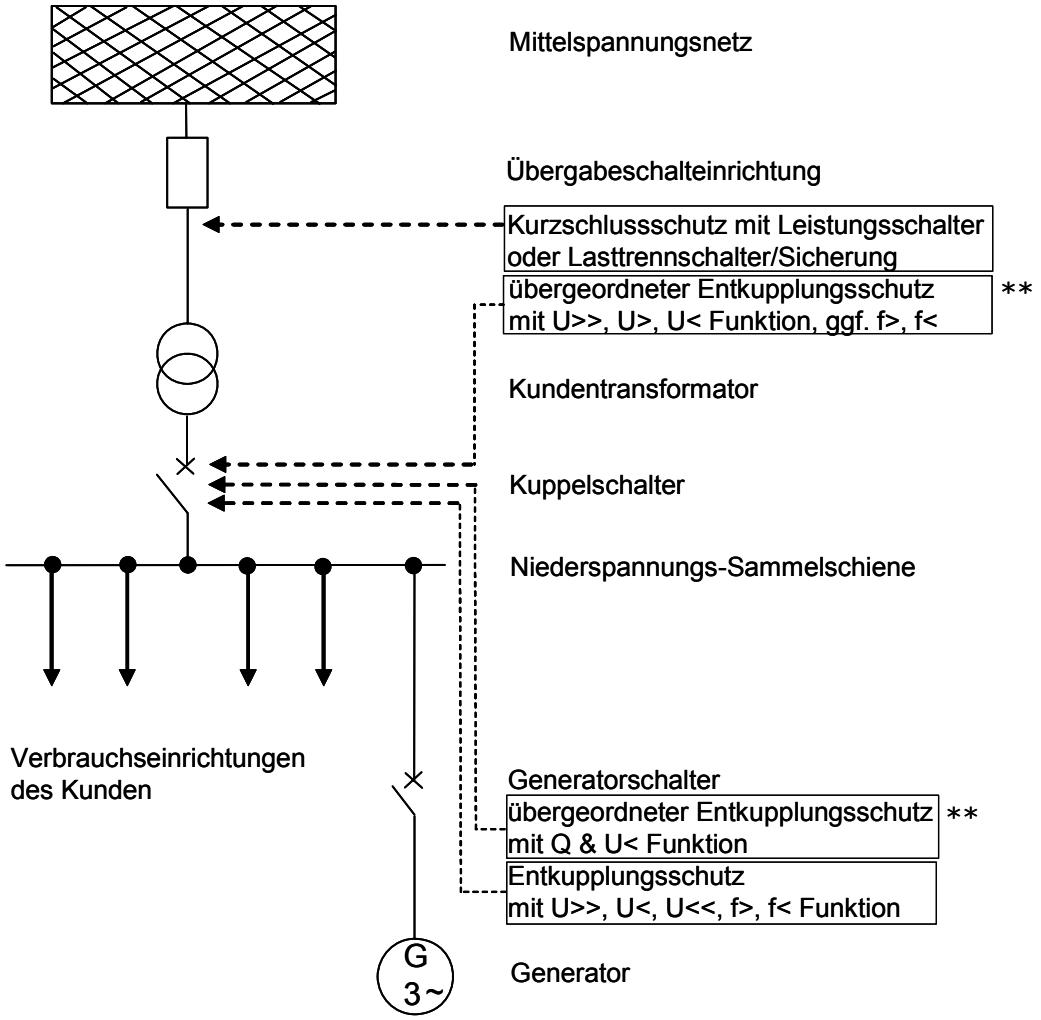

Figure C.7: **Customer facility connected to the medium-voltage network with a generating plant with one generating unit and capability of isolated operation via a low-voltage side coupling switch**

** on request of the network operator

Note: Where necessary, a rise-in-frequency and an under-frequency protection relay need to be additionally installed for the super-ordinate protective disconnection device. The use of this function will then be determined by the network operator.

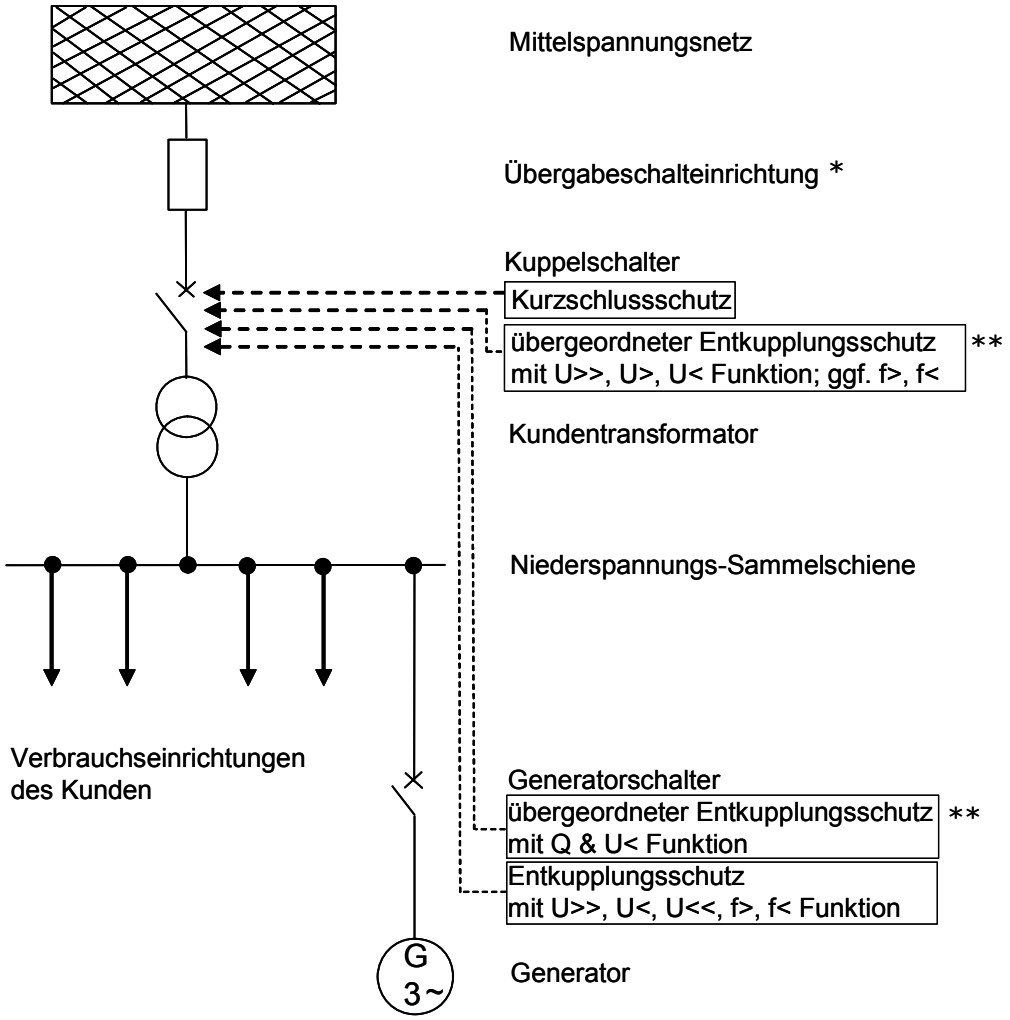

Figure C.8: **Customer facility connected to the medium-voltage network with a generating plant with one generating unit and capability of isolated operation via a low-voltage side coupling switch**

* In consultation with the network operator, the circuit breaker may also assume the function of transfer switching device.

Note: To this end, the circuit breaker must be designed as a plug-in unit or with a superordinate isolator/load disconnector.

** on request of the network operator

Note: Where necessary, a rise-in-frequency and an under-frequency protection relay need to be additionally installed for the super-ordinate protective disconnection device. The use of this function will then be determined by the network operator.

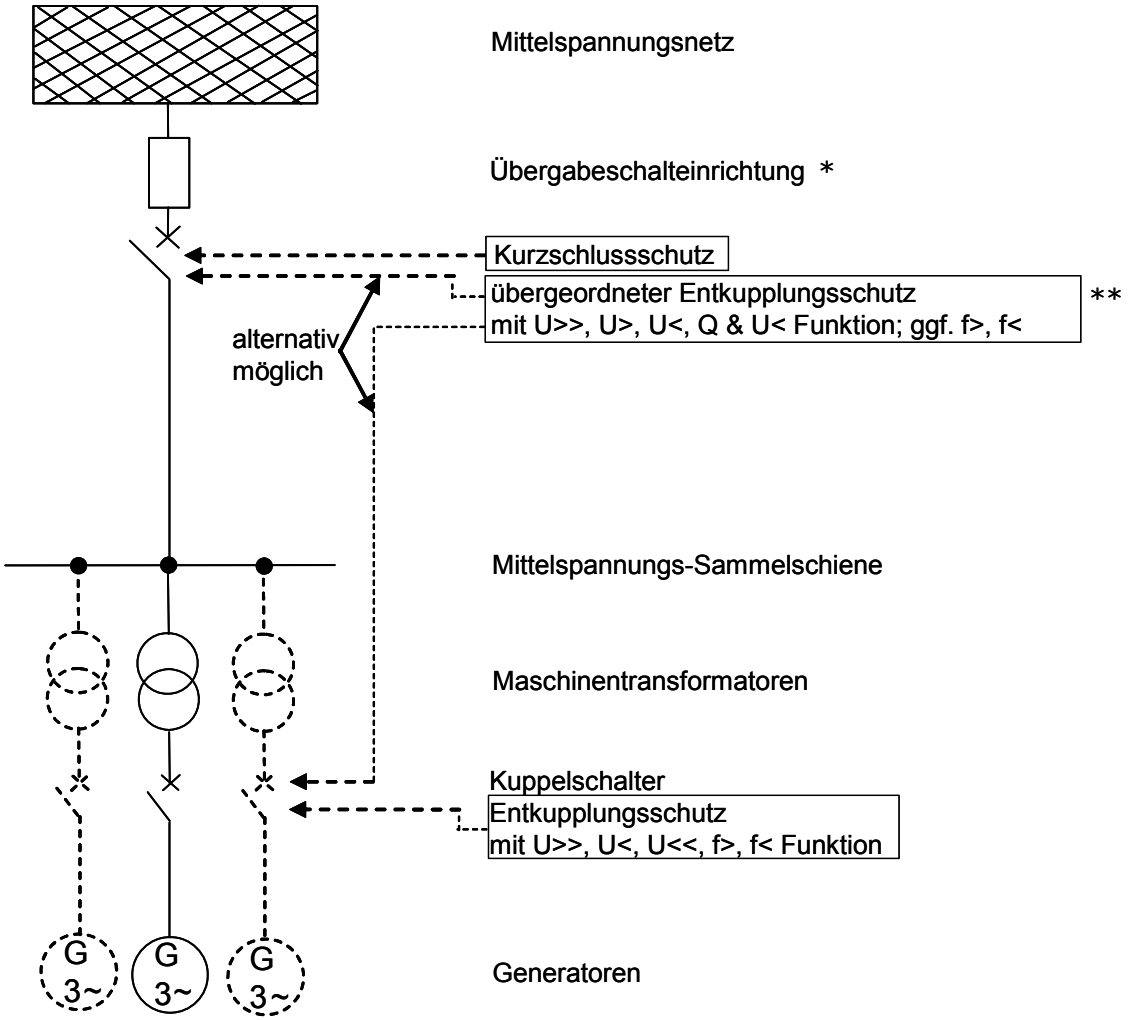

Figure C.9: **Generating plant connected to the medium-voltage network with circuit breaker and one or several generating units without possibility of isolated operation**

* In consultation with the network operator, the circuit breaker may also assume the function of transfer switching device.

Note: To this end, the circuit breaker must be designed as a plug-in unit or with a superordinate isolator/load disconnector.

** on request of the network operator

Note: Where necessary, a rise-in-frequency and an under-frequency protection relay need to be additionally installed for the superordinate protective disconnection device. The use of this function will then be determined by the network operator.

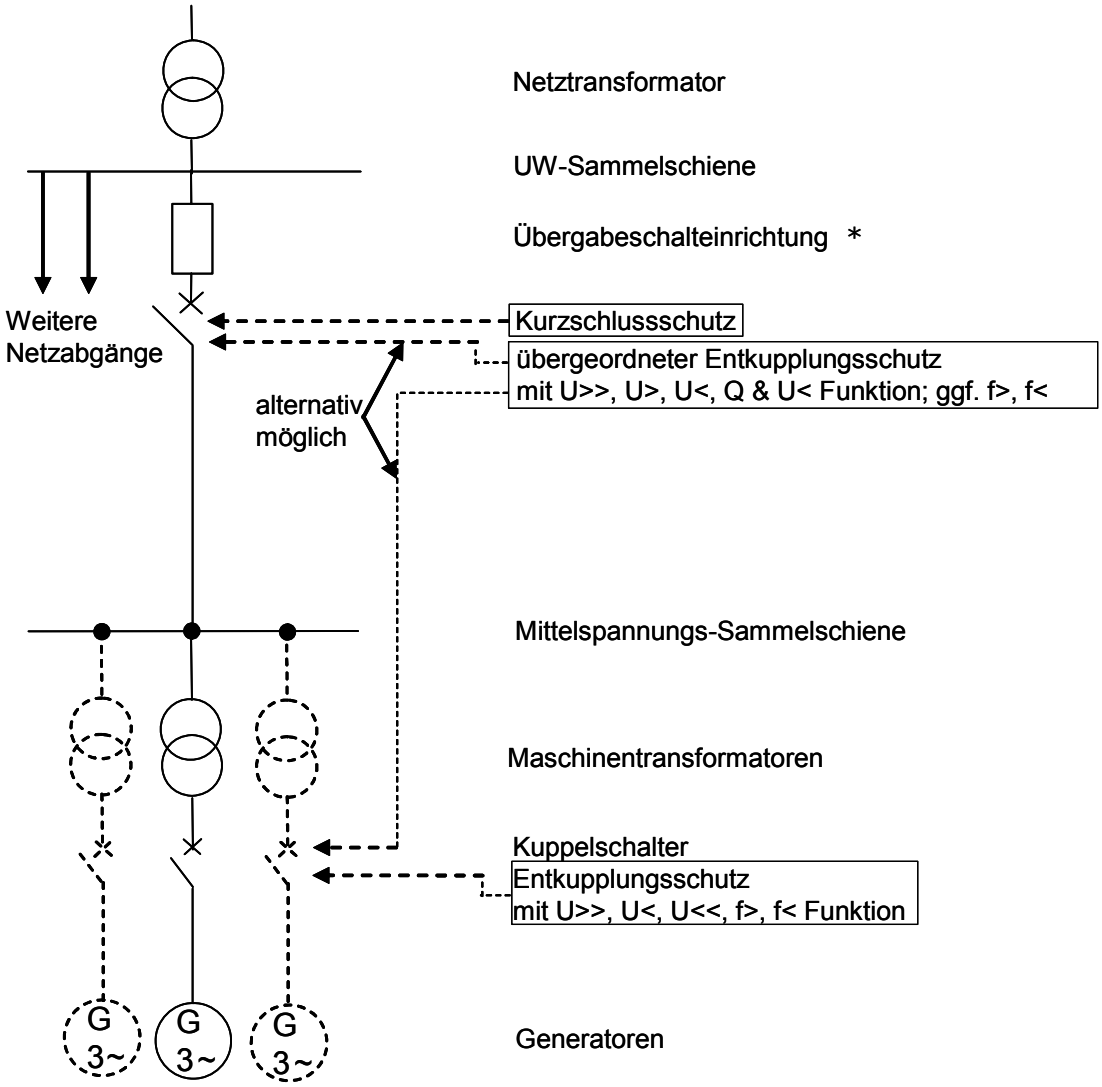

Figure C.10: **Generating plant connected to the medium-voltage bus-bar of a transforming station with one or several generating units without possibility of isolated operation**

* In consultation with the network operator, the circuit breaker may also assume the function of transfer switching device.

Note: To this end, the circuit breaker must be designed as a plug-in unit or with a superordinate isolator/load disconnector.

Note concerning the super-ordinate protective disconnection device: Where necessary, a rise-in-frequency and an under-frequency protection relay need to be additionally installed. The use of this function will then be determined by the network operator.

D Examples of the assessment of generating plants’ connection

D.1 Connection of an 800 kW photovoltaic power plant

Data of the generating plant

Active connection power requested:	800 kW
expected annual energy:	720 MWh
station service power requested:	10 kW

Generating units

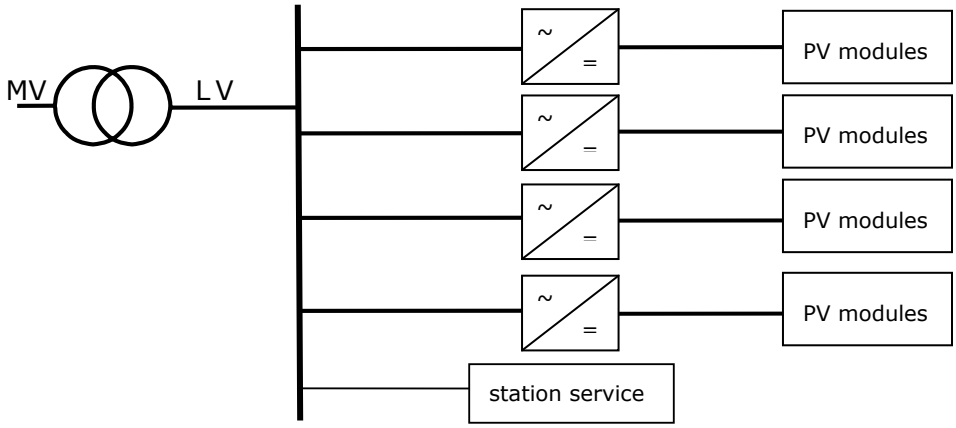

Manufacturer :	WR, Type PV 200
Rated apparent power:	S_{rE} = 220 kVA
Number of generating units:	4
Inverter:	self-controlled inverter 14 kHz rated voltage: 400 V active factor cos φ: adjustable between 0.92 under-excited and 0.92 overexcited
Concept (brief description, converter concept)	
- 4 central inverters connected via a 1000 kVA customer transformer	
- Protective disconnection devices individually realized in every centralized inverter	
- Connection to the medium-voltage network via a fuse load-break switch combination	
- Station service power 10 kW	

Short-circuit behaviour (in the event of a three-phase fault on the low-voltage side of the generator transformer)

Ratio of sub-transient short-circuit current / rated current $I''_{k3} / I_{rE} = 1$ p.u.

or ratio of starting current / rated current $I_{An} / I_{rE} = 1$ p.u.

Disconnection facilities

The disconnection facilities are integrated into the central inverter. As the protective disconnection devices are realized on the low-voltage side, the customer transformer's tapping is determined by the network operator. The transformation ratio must not be modified without the network operator's consent.

In the transfer station, a super-ordinate protective disconnection device (circuit breaker included) was taken into consideration for the conceptual development.

Generating plant (Data have been taken from the data sheet)

Customer transformer

HV side	rated voltage:	$U_{rT\text{-}OS}$ = 20 kV
	rated capacity:	$S_{rT\text{-}OS1}$ = 1000 kVA
	tapping switch max.	U_{max1} = 21 kV
	tapping switch min.	U_{min1} = 19 kV
	number of taps:	5
LV1 side	rated voltage:	$U_{rT\text{-}US1}$ = 0.4 kV
	connection symbol	Dyn5
	rel. short-circuit voltage with mid-position of the tapping switch:	HV-LV $u_{k\text{-}HV\text{-}LV}$ = 6 %

Medium-voltage-side network of the generating plant

total cable length: 2 km

type, cable cross-section: NA2XS2Y 3 x 1 x 150 mm^2

Low-voltage-side network of the generating plant

total cable length: 0.05 km

type, cable cross-section: NYY 4 x 300 mm^2 x 4

Network data

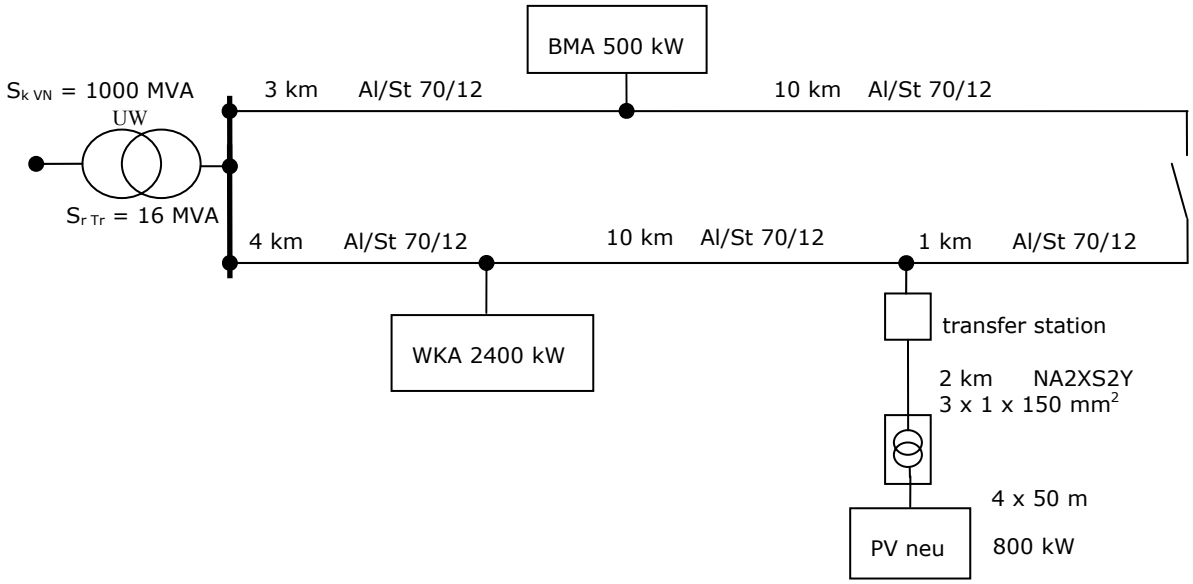

Short-circuit power of the higher-voltage network: $S_{k\,VN}$ = 1000 MVA

Network transformer: $S_{r\,Tr}$ = 16 MVA u_k = 12 % P_{Cu} = 92 kW

Overhead line Al/St 70/12: R´ = 0.413 Ω/km X` = 0.345 Ω/km

<u>Calculation of the network short-circuit power S_{kV} at the network connection point</u>

- Impedances of the 110 kV network, S_{kVN} = 1000 MVA

$$Z_N = \frac{U^2}{S_{kVN}} = \frac{20\,kV \cdot 20\,kV}{1000\,MVA} = 0{,}4\Omega$$

$$X_N \approx Z_N = 0{,}4\,\Omega$$

If the reactance to resistance ratio is not known, a value of 6 can be used as reference value.

$$X_N = 0{,}4\,\Omega \qquad R_N = 0{,}07\,\Omega$$

- Impedances of the network transformer, $S_{r\,Tr}$ = 16 MVA, u_k = 12 %

$$S_{kT} = \frac{S_r}{u_k} = 133{,}3\,MVA \qquad X_T \approx Z_T = \frac{U^2}{S_{kT}} = 3\,\Omega$$

The resistance of the network transformer can usually be neglected; but where necessary, it can also be calculated from the short-circuit losses of the network transformer.

- Short-circuit losses P_{Cu} = 92 kW

$$P_{Cu} = 3 \cdot I_r^{\,2} \cdot R_T = 3 \cdot \frac{S_r^{\,2}}{3 \cdot U^2} \cdot R_T$$

$$R_T = \frac{U^2}{S_r^{\,2}} \cdot P_{Cu} = 0{,}14\Omega$$

- Impedances of the overhead line, length 14 km

- Reactance per unit length of the overhead line: 0.345 Ω/km

- Resistance per unit lenght of the overhead line: 0.413 Ω/km

X_L = 4.83 Ω R_L =5.78 Ω

The impedances decisive for the plant’s connection, are obtained from the sum of the three individual values

X_{kV} = 8.23 Ω R_{kV} = 5.99 Ω Z_{kV} = 10.18 Ω

and the short-circuit power

$$S_{kV} = \frac{U^2}{Z_{kV}} = 39{,}3\,MVA$$

<u>Specifications of the network operator concerning the network connection</u>

The network in question is a rural network to which the connection of further generating units is expected. For the sake of an optimum utilization of the network, all new generating plants should contribute to steady-state voltage support. Dynamic network support is not scheduled for the time being.

Steady-state voltage support shall be implemented by means of a cosφ(P) characteristic which is determined by the network operator. For this purpose, it must be possible to operate the generating plant in such a way that the displacment factor can be adjusted at the network connection point between

$$0{,}95_{\text{untererregt}} \leq \cos\varphi \leq 1$$

A wind power plant (P_{AV} = 2.4 MW, cos φ = 1) has already been connected to the connecting overhead line. Moreover, a second generating plant (biomass, P_{AV} = 500 kW, cos φ = 1) is already connected at the other side of the ring.

Check-up of the admissible voltage change according to Section 2.3

As the voltage at the bus-bar of the transforming station is assumed to be constant, only the impedances in the medium-voltage network are taken into consideration for a “voltage change” criterion.

$X_{kV,\ MS}$ = 4.83 Ω $R_{kV,\ MS}$ = 5.78 Ω $Z_{kV,\ MS}$ = 7.53 Ω

With a active factor cosφ = 1, the voltage change obtained at the junction point of the photovoltaic plant is

$$\Delta u_a = \frac{S_{A\max} \cdot (R_{kV} \cdot \cos|\ \varphi\ | - X_{kV} \cdot \sin|\ \varphi\ |)}{U^2} = \frac{800\,kVA \cdot (5{,}78\Omega * 1)}{(20\,kV)^2} = 1{,}16\,\%$$

The maximum apparent power of the generating plant is obtained with a active factor of cosφ = $0.95_{\text{underexcited}}$.

According to formula B.1-1, the following voltage change at the junction point of the photovoltaic plant is determined for under-excited operation:

$$\Delta u_a = \frac{S_{A\max} \cdot (R_{kV} \cdot \cos|\ \varphi\ | - X_{kV} \cdot \sin|\ \varphi\ |)}{U^2} = \frac{842\,kVA \cdot (5{,}78\Omega * 0{,}95 - 4{,}83\Omega \cdot 0{,}31)}{(20\,kV)^2} = 0{,}84\,\%$$

Taking account of the existing wind power plant <u>and</u> of the planned photovoltaic plant, the voltage change represented in Table D.1-1 is obtained as a result of the superposition of voltage changes of the two plants.

	Voltage change in %	
	Junction point of wind power plant	Junction point of photovoltaic plant
Wind power plant (cos φ = 1)	0.99	0.99
Photovoltaic plant new (0.,95 $_{\text{under-excited}}$)	0.24	0.84
Total	1.23	1.83

Table D.1-1: Voltage change at the different junction points

The voltage rise obtained is 1.83 %; thus, the connection is admissible.

Note: With a active factor of cos φ = 1, a voltage rise of u_a = 1.16 % + 0.99 % = 2.15 % would be obtained at the photovoltaic plant’s junction point. Hence, the connection would not be admissible.

For the individual determination of the cosφ(P) characteristic, it is necessary to calculate at least one more point of the characteristic. The characteristic is determined in such a way

that the voltage rise is constant. That means that a maximally possible feed-in is obtained for every active factor, e.g.:

$$P_{A\max} = \frac{\cos\varphi \cdot \Delta u_a \cdot U^2}{(R_{kV} \cdot \cos|\ \varphi\ | - X_{kV} \cdot \sin|\ \varphi\ |)} = \frac{0{,}0084 \cdot (20\,kV)^2}{5{,}78\Omega} = 580\,kW$$

The following characteristic points are obtained:

cos φ (photovoltaic plant only)	Voltage change photovoltaic + wind power plant (photovoltaic only) in %		
	junction point wind power plant	junction point photo-voltaic plant	**P_{Amax}/kW**
0.95 under-excited	1.23 (0.24)	1.83 (0.84)	**800**
0.98 under-excited	1.23 (0.24)	1.83 (0.84)	**700**
1	1.23 (0.24)	1.83 (0.84)	**580**

Table D.1-2: Voltage change at the different junction points

The following characteristic is obtained from Table D.1-2:

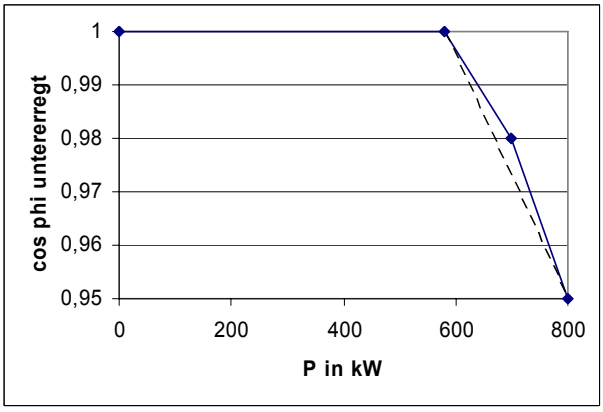

Figure D.1-1: cos φ (P) characteristic

The characteristic represented in Figure D.1-1 must be stored in the inverters. In a simplified manner, it is also possible to assume the broken line converters.

The generating plant shall only turn into under-excited operation if required for voltage control. The losses additionally arising from the under-excited operation mode, are minimized by means of the characteristic.

Check-up of the dimensioning of network equipment according to Section 2.2

Constant current load

The maximum apparent power is obtained from the maximum active power and the power factor pre-determined at the network connection point (in this case = cos φ):

$$S_{A\max} = \frac{P_{E\max}}{\cos\varphi} = \frac{800kW}{0{,}95} = 842\,kVA$$

The maximum feed-in current obtained with a rated network voltage of 20 kV is

$$I_{A\max} = \frac{S_{A\max}}{\left(\sqrt{3}\cdot 20kV\right)} = \frac{842kVA}{\left(\sqrt{3}\cdot 20kV\right)} = 24{,}3\,A$$

In the N-1 case , feed-in currents of existing plants (500 kW, cos φ = 1, $I_{Amax,\ BMP}$ = 14.4 A und 2,400 kW, cosφ = 1, $I_{Amax,\ WKA}$ = 69.3 A) and of the new plant may add up to the following value:

$I_{Amax,\ total}$ = 24.3 A + 14.4 A + 69.3 A = 108 A

Within this network, the bottleneck is formed by the Al/St 70/12 overhead line with an admissible constant current load of 290 A. Thus, the maximum feed-in currents are far below the equipment’s admissible constant current loading.

Short-circuit current

- The overhead line forms the bottleneck with a rated short-circuit current of 4.8 kA.
- The short-circuit current at the bus-bar of the transforming station is 3.4 kA.
- The wind power plant supplies a short-circuit current to the amount of the rated current of $I''_{K,\ WKA}$ = 0.07 kA.
- The new photovoltaic plant supplies a short-circuit current to the amount of the rated current of von $I''_{K,\ PV}$ = 0.024 kA.

Depending on the location of the short circuit, both components will decrease (impedances of the overhead line, of cables and of the customer transformer). If these impedances are neglected, a maximum short-circuit current of 3.5 kA (or 3.6 kA in the N–1 case) is obtained.

The short-circuit strength of the equipment is sufficient.

Note:

Depending on the X/R ratio, the maximum asymmetric short-circuit current can reach up to 2.83 times the short-circuit current. This can be more critical for the electric equipment (within or close to

the transforming station, in the proximity of the incoming supply) than the thermal short-circuit current.

Due to the low short-circuit current of less than 3.5 kA or 3.6 kA, respectively, a check-up of the dynamic short-circuit strength is not necessary in this case.

Check-up of the network repercussion „Sudden voltage change“

The given rated apparent power of the generating plant's inverters is 200 kVA. The value of k_{imax} is 1.2.

$$\Delta u_a = k_{i\max} \cdot \frac{S_{rE}}{S_{kV}} = 1{,}2 \cdot \frac{200\,kVA}{39{,}3\,MVA} = 0{,}61\%$$

The sudden voltage change amounts to 0.61 % and is thus admissible.

The connection of further inverters must take place in a delayed manner.

$\Delta t_{\min} = 23 \cdot (100 \cdot \Delta u)^3$ in [seconds] $\Delta t_{\min} = 23 \cdot (100 \cdot 0{,}0061)^3 = 5{,}2\,s$

The additional inverters may be connected at 6-second intervals.

If all generating plants are simultaneously disconnected, the voltage change at every point of the network is limited to $\Delta u_{max} \leq 5$ %.

In case of a sudden voltage change, the voltage control at the network transformer is not taken into account; therefore, apart from the impedances of the medium-voltage network, it is necessary to take also the impedances of the network transformer and of superimposed networks into consideration.

	Voltage change in %		
	Transforming station bus-bar	Junction point wind power plant	Junction point photovoltaic plant
Biomass plant (cos φ = 1)	-0.03	-0.03	-0.03
Wind power plant (cos φ = 1)	-0.13	-1.12	-1.12
Photovoltaic plant (cos φ = 0.95 $_{\text{under-excited}}$)	0.18	-0.06	-0.66
Total	+0.02	-1.21	-1.81

Table D.1-2: Voltage change after disconnection of all generating plants

The 5 % limit for the disconnection of all generating plants is not exceeded.

Check-up of the network repercussion „Long-term flicker“

- Long-term flicker (Section 2.4.2) are not relevant to photovoltaic plants.

Check-up of the network repercussion „Harmonics and inter-harmonics“

The Guideline determines the admissible harmonics fed in by the photovoltaic plant according to the equation 2.4.3-2.

$$I_{\nu\,zul} = i_{\nu\,zul} \cdot S_{kV} \cdot \frac{S_A}{S_{Gesamt}}$$

The values of the admissible related current $i_{\upsilon zul}$ are given in Table 2.4.3-1. The feed-in harmonic currents admissible for the wind farm are shown in the 3rd column of Table D.1-3.

The 4th column of Table D.1-3 shows the harmonic currents given in the units certificate, related to the rated current of a generating unit (1 inverter). As the generating unit is operated with pulse-modulated converters, a continuous harmonic spectrum is generated, where the amplitudes of the current applicable to the different ordinal numbers are low. Therefore, there are no values indicated in the inspection record if the harmonic current is below 005 %. The result is that there are no more measured values in existence above the 19th order for odd ordinal numbers and above the 6th order for even ordinal numbers.

The Guideline recommends in the Explanations arithmetically adding harmonic currents produced by several generating units only for the 2nd order in the case of integer-valued orders. For higher orders, a quadratic superposition takes place.

Ordinal number	$i_{\nu zul}$	$I_{\nu Azul}$	$(I_\nu / I_r)_{WR}$	$I_{\nu WR}$	$I_{\nu PV\text{-}Anlage}$
υ	A/MVA	A	%	A	A
odd					
5	0.029	0.062	0.4	0.026	0.052
7	0.041	0.088	0.65	0.042	0.084
11	0.026	0.056	0.3	0.019	0.038
13	0.019	0.041	0.3	0.019	0.038
17	0.011	0.024	0.15	0.01	0.02
19	0.009	0.019	0.1	0.006	0.012
23	0.006	0.013	-	-	-
even					
2	0.015	0.032	0.1	0.006	0.024
4	0.008	0.017	0.05	0.003	0.006
6	0.005	0.011	0.05	0.003	0.006

Table D.1-3: Comparison between feed-in harmonic currents admissible according the Guideline for photovoltaic plants with those resulting from the unit certificate

The Table shows that the injected harmonic currents are admissible for all orders. The values measured for the current’s inter-harmonics are usually not indicated in the extract from the unit certificate. However, the applicant has made available the entire report of the test laboratory. As the superposition of the four generating units is quadratic here, the measured currents are always below the admissible currents as long as the assessment is restricted to the range above the measurement limit of 0.05 % of the rated current.

As final assessment, it is decided that harmonics and inter-harmonics in the feed-in current be regarded as admissible.

Check-up of the impact on audio-frequency ripple control systems

Ripple control is not implemented in the network in question.

Decision about the connection

The connection of the 800 kW photovoltaic plant to the rural 20 kV network can be permitted if the generating plant feeds-in with a active factor that corresponds to the cosφ(P) characteristic.

A plant certificate is not required for this generating plant as the connection power S_A is ≤ 1 MVA and the connection cables of the photovoltaic plant do not exceed a length of 2 km.

Design of the transfer station

The transfer station is scheduled to be realized according to Figure C.6 with load break switch and short-circuit protection through high-voltage HRC fuse on the medium-voltage side of the customer transformer (network connection point).

It has to be made sure that a short circuit on the connecting line or in the customer transformer is cleared within less than 100 ms.

Notes:
The short-circuit on the low-voltage side of the network transformer (worst case) is to be reviewed. The overall impedance is thus obtained from the impedance at the network connection point, the impedance of the connection cable and of the network transformer.

<u>Network connection point</u>

X_{kV} = 8.23 Ω R_{kV} = 5.99 Ω

<u>Connection cable</u>

2 km NA2XS2Y 3 x 1x 150 mm^2: X' =0.122 Ω/km R' = 0.211 Ω/km

X_K = 0.24 Ω R_K = 0.42 Ω

Related to the low-voltage side:

$$X = 8{,}47\Omega \cdot \left(\frac{0{,}4}{20}\right)^2 = 3{,}4\,m\Omega \qquad R = 6{,}41\Omega \cdot \left(\frac{0{,}4}{20}\right)^2 = 2{,}6\,m\Omega$$

<u>Impedance of the customer transformer</u>

$$R_T = \frac{U^2 \cdot P_{Cu}}{S_r{}^2} = \frac{(400\,V)^2 \cdot 9{,}6\,kW}{(1\,MVA)^2} = 1{,}5\ m\Omega$$

$$X_T = \frac{U^2}{S_r \cdot 100} \cdot \sqrt{u_k{}^2 - \left(\frac{P_{Cu} \cdot 100}{S_r}\right)^2} = \frac{(400\,V)^2}{1\,MVA \cdot 100} \cdot \sqrt{(6\,\%)^2 - \left(\frac{9{,}6\,kW \cdot 100}{1\,MVA}\right)^2} = 9{,}5\,m\Omega$$

Thus, the short-circuit power obtained on the low-voltage side of the customer transformer (only network side) is

$$S_{k,TrNS}'' = \frac{U^2}{\sqrt{R^2 + X^2}} = \frac{400V^2}{\sqrt{(4{,}1m\Omega)^2 + (12{,}9m\Omega)^2}} = 11{,}8\,MVA$$

Hence, the high-voltage HRC fuse must trip within 100 ms at a current of 341 A. If appropriate, the use of a circuit breaker with definite time-delay over-current protection may be required.

D.2 Connection of a 20 MW wind farm

Generating plant

requested active connection power:	20 MW
expected annual energy:	40,000 MWh
requested station service power:	30 kW

energy used:

- [x] wind
- [ ] water
- [ ] biomass
- [ ] photovoltaic
- [ ] .....

requested point of connection to the network: bus-bar Müllerdorf transformer substation

Brief description of the generating plant:

10 wind energy plants of the company Windpower Type WEA 2000, 2 MW per unit

Wind energy plant network in two strands, transfer station in the transformer substation.

Annexes: site map, plant .....

sketch-map, plant .....

Generating units

manufacturer: “Windpower” type WEA 2000 ....

rated apparent power S_{rE} = 2.2 MVA

number of generating units 10

generator: asynchronous machine ▩

synchronous machine ☐

rated voltage 690 V

Concept:

- double-fed asynchronous generator with „fault-ride-through“ possibility
- active power reduction at rated wind possible within 20 s from rated power to 0
- active factor via 20 mA interface adjustable between 0.9 overexcited and 0.9 under-excited
- connection to the wind energy plant network through Dy5 generator transformers and substation with load-break switches
- ratio of starting current / rated current: I_{An} / I_{rE} = 1.5 p.u.

Short-circuit behaviour:

The information given hereinafter is related to

- a three-phase short circuit in the higher-voltage network, with a voltage of 0 % U_c on the high-voltage side of the generator transformer,
- a three-phase short circuit in the higher-voltage network, with a residual voltage of 30 % U_c on the high-voltage side of the generator transformer
- a three-phase short circuit in the higher-voltage network, with a residual voltage of 80 % U_c on the high-voltage side of the generator transformer.

Indicated are the values of the short-circuit current I''_{k3} according to VDE 0102 which are related to the rated current of the generating unit at the time of the occurrence of the short circuit, and 150 ms and 1000 ms after the occurrence of the short-circuit.:

I''_k / I_{rE1}	U = 0	U = 30 % U_c	U = 80 % U_c
t = 0s	3.0	2.0	1.0
t = 150ms	1.0	1.0	1.0
t = 1000ms	1.0	1.0	1.0

Disconnection facilities:

In measurement terms, the disconnection facilities are connected to

the medium-voltage network ☐

the generator ▩

manufacturer	SBC...Type...AFB 700...		
setting range	rise in frequency f>	50 – 52 Hz	0 – 10 s *)
	decline in frequency f<	47 - 50 Hz	0 – 10 s *)
	rise in voltage U>>	1.0 – 1.3 p.u.	0 - 5 s *)
	decline in voltage U<	0.1 – 1.0 p.u.	0 - 5 s *)
	decline in voltage U<<	0.1 – 1.0 p.u.	0 - 5 s *)

*) The sum of the inherent response time of the protective disconnection facility and the switching device is 100 ms.

Generator transformer:

HV side	rated voltage:	$U_{rT\text{-}OS}$ =	20 kV
	rated power:	$S_{rT\text{-}OS1}$ =	2.5 MVA
	tapping switch max.	U_{max1} =	21 kV
	tapping switch min.	U_{min1} =	19 kV
	number of taps:		3
LV side	rated voltage:	$U_{rT\text{-}US}$ =	0.69 kV
	rated power:	$S_{rT\text{-}US}$ =	2.5 MVA
connection symbol		Dy5	

short-circuit voltage at mid-position of the tapping switch: 6 %

Medium-voltage-side network of the generating plant:

- Wind farm network with two strands of 3 km each, every strand over a separate cable route 800 mm^2 , aluminium, length 8 km, to the transfer station

total cable length:	22 km
type, cable cross-section:	NA2XS(F)2Y, 800 mm^2
total cable length:	2x8 km

type, cable cross-section: NA2XS(F)2Y, 150-500 mm^2

2x3km

total length of overhead line: …. km

type, line cross-section: ….

Basic structure of the wind-farm network:

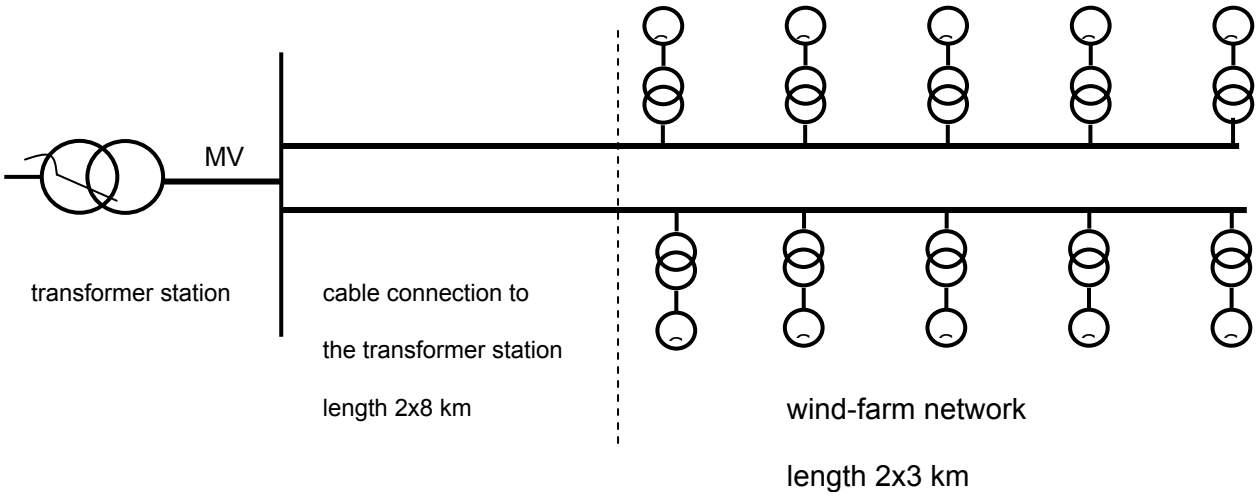

Specifications of the network operator concerning the network connection

The Müllerdorf transformer substation is supplied via two 31.5-MVA network transformers from the 110 kV network. The 20 kV installation has two bus-bars 1 and 2 which may be separately operated. The transformer substation simultaneously serves the energy supply to the town of Müllerdorf.

A wind farm with a rated output of 6 MW is already connected to the transformer station. At rated wind, the output of this wind farm cannot be reduced as it was approved and erected according to the previously applicable guidelines. Network substations with loads are also existent at the outgoing feeder of the transformer substation which this wind farm is connected to. The cable connected is executed in NA2XSY 240 mm^2 Al. The distance from the transformer station to the junction point of this wind farm is 6 km.

It is necessary to check the conditions on which the new wind farm with the MV bus-bar coordination

- bus-bar 1: outgoing feeders for the supply of the town of Müllerdorf
- bus-bar 2: outgoing feeder to the existing 6 MW wind farm WP1
  feed-in of the new 20 MW wind farm

can be connected.

According to the requirements of the network operator of the higher-voltage 110 kV network, the new wind farm is to serve voltage control in the 110 kV network both in normal operation and in the event of faults.

The agreed service voltage is 20 kV. Voltage control is adjusted to a voltage range between 20.0 kV and 20.5 kV.

Check-up of the rated power of equipment according to Section 2.2

The outgoing feeders of the medium-voltage plant in the transformer substation are dimensioned for a rated current of 630 A, whereas the bus-bar and the transformer incoming feeder cubicle are dimensioned for a rated current of 1250 A according to the transformer rating. The load to be expected from the generator output is as follows:

- existing wind farm WP1 with 6 MW, $\cos\varphi = 1$: 173 A
- newly proposed wind farm WP new, 20 MW, $\cos\varphi = 0.9$: 641 A

Two outgoing feeder panels are required for the newly proposed wind farm. The plant must be extended to these two panels.

The total length of cables of the new wind farm amounts to 22 km with a charging capacity of 1.3 MVA. The network is operated in a resonant-earthed mode, and the arc-suppression coil at the network transformer must be amplified.

Review of the admissible voltage range according to Section 2.3

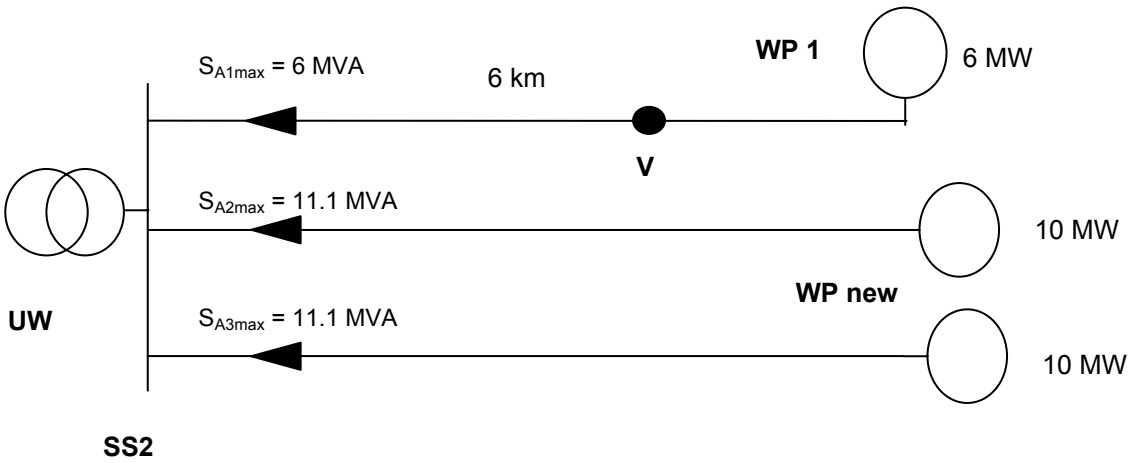

Figure D.2-1 Distribution of generating plants to the outgoing feeders of the transformer substation

The formulas B.1-3 and B.1-4 mentioned in the explications shall be applied, with the different line sections being treated separately.

$$\Delta u_a = \frac{S_{A\max} \cdot \cos(\psi_{kV} + |\varphi|)}{S_{kV}} = \frac{S_{A\max} \cdot (R_{kV} \cdot \cos|\varphi| - X_{kV} \cdot \sin|\varphi|)}{U^2}$$

As the new wind farm is to be used for voltage support, voltage changes have to be determined for the total range of the required active factor.

The network transformer of the transformer substation is equipped with a tapping switch control which is capable of modifying the high-side winding in constant steps of 1.5 kV to 110 kV ±15 kV.

The voltage change between bus-bar 2 of the transformer substation and the junction point V shown in Figure D.2-1 is calculated at first. Calculation programs are available for this purpose, but sufficiently accurate values can also be determined on the basis of the data usually known.

- Impedances of the 110 kV network, S_{kVN} = 2000 MVA

$$Z_N = \frac{U^2}{S_{kVN}} = \frac{20 \cdot 20}{2000} = 0.2\Omega$$

If the reactance/resistance ratio is not known, a value of 6 may be applied as reference value. The following two values are then obtained:

X_N = 0.20 Ω R_N = 0.03 Ω

- Impedances of the network transformer, S_r = 31.5 MVA, u_k = 15 %

$$S_{kT} = \frac{S_r}{u_k} = 210MVA$$

$$Z_T = \frac{U^2}{S_{kT}} = 1.90\Omega$$

The resistance of the network transformer can normally be neglected; but where necessary, it may also be calculated on the basis of the network transformer’s short-circuit losses.

Example: short-circuit losses P_{Cu} = 150 kW

$$P_{Cu} = 3 \cdot I_r^2 \cdot R_T = 3 \cdot \frac{S_r^2}{3 \cdot U^2} \cdot R_T$$

$$R_T = \frac{U^2}{S_r^2} \cdot P_{Cu} = 0{,}06\Omega$$

- Impedances of the cable to the junction point V, length 6 km

Reactance per unit length of the cable: 0.10 Ω/km

Resistance per unit length of the cable: 0.13 Ω/km

XL = 0.60 Ω RL = 0.78 Ω

The impedances relevant to bus-bar 2 of the transformer substation are obtained from the sum of the two individual values

X_{kSS} = 2.10Ω R_{kSS} = 0.09 Ω Z_{kSS} = 2.10 Ω ψ_{kSS} = 87.5°

and the short-circuit power at bus-bar 2 of the transformer substation.

$$S_{kSS} = \frac{U^2}{Z_{kSS}} = 190MVA$$

The feed-in of wind farm WP 1 with 6 MVA, cosφ = 1, increases the voltage at the junction point V as compared to that at bus-bar 2 of the transformer substation, irrespective of the feed-in of the planned new wind farm (WP neu), by 1.17 % according to equation B.1-4.

Furthermore, it is necessary to determine the voltage change at bus-bar 2 of the transformer substation, without the effect of the tapping switch control as the admissible control range is limited by the consumption or feed-in on the medium-voltage side. It is necessary to add the active and reactive power of the two wind farms, and determine the active factor thus obtained. The resulting conditions for full feed-in and low load are shown in Table D.2-1.

Displacement factor	Active power MW	Reactive power MVA	Apparent power MVA	cos φ	sin φ	Δu_{SS} %
$0.9_{underexcited}$	26.00	9.69	27.75	0.94	0.35	-4.50
$0.95_{underexcited}$	26.00	6.57	26.82	0.97	0.25	-2.87
1	26.00	0.00	26.00	1.00	0.00	0.59
$0.95_{overexcited}$	26.00	-6.57	26.82	0.97	-0.25	4.04
$0.9_{overexcited}$	26.00	-9.69	27.75	0.94	-0.35	5.67

Table D.2-1: Voltage changes at bus-bar 2 of the transformer substation without regard to the tapping switch control with full wind-energy plant feed-in and low load, here assumed to be zero.

For the active factor cos φ =1, a voltage change of 0.59 % is obtained at the bus-bar. If such a voltage change occurs, the control equipment will not in any case release, as the tapping is 1.5 % and the voltage on the medium-voltage side must not necessarily be in the upper half of the control range. As the voltage at the junction point V is 1.17 % above the voltage at the bus-bar, a voltage rise of 1.76 % is obtained there, which is admissible.

For active factors deviating from 1, the limit of 5 % given in Section 2.4.1 shall apply to the disconnection of the entire wind farm „WP neu" and to the disconnection of the two wind farms simultaneously. The results show that the wind farm meets this requirement for the whole range from $0.95_{underexcited}$ to $0.95_{overexcited}$ required in Section 2.5.4.

Note:

If the new wind farm is in an under-excited operation mode, a negative voltage change, hence a voltage decrease, will occur on the bus-bar of the transformer substation. This voltage decrease will be controlled by the tapping switch at the latest when if falls below the tapping of the regulating winding of –1.5 %. The transformer's transmission ratio is thus lowered, i.e. that the voltage of the 110 kV network is above the rated voltage of the high-side winding.

The admissible over-excitation has been determined by the standard VDE 0532 Part 1 of the Association for Electrical, Electronic and Information Technologies (Verband Elektrotechnik Elektronik Informationstechnik - VDE):

VDE 0532 Teil 1, Kapitel 4.4 „Zulässige Übererregung"

The transformer must be capable of supplying its rated current on the secondary winding also with an applied voltage amounting to 105 % of the rated voltage.

Note:

The slight rise in temperature resulting from the increase in no-load losses at 105 % of the rated voltage, can be neglected. The tap changer control can thus control a voltage decrease of 5 % without any power losses.

In case of overexcited operation, a rise in voltage occurs which is balanced by the tap changer control through selection of a higher transmission ratio. The rated voltage of the high-side winding is then above the network voltage and the current fed into the network is lowered.

In case of overexcited operation, voltage rises may occur on the junction point V which are above 2 % in spite of the tap changer control. This is attributable to the tapping of the regulating winding of 1.5 % which enables the voltage on the junction point V to vary by up to 1.5 % +1.17 % = 2.67 % with and without feed-in. It is to be examined whether the low-voltage tolerances at the junction point V are thereby exceeded, taking account of the feeders existing on the low-voltage side. If this is not the case, over-excited operation of the wind farm can also be admitted.

Check-up of the network repercussion „Sudden voltage change“

A value of 2.2 MVA is given in the data sheet for the rated apparent power of the plant's individual generators. The value of 1.5 for k_{imax} is taken from the data sheet.

Junction point is the bus-bar in the transformer substation with a short-circuit capacity of S_{kSS} = S_{kV} = 190 MVA. Thus, switching on of a single wind energy plant leads to a sudden voltage change of

$$\Delta u_a = k_{i\max} \cdot \frac{S_{rE}}{S_{kV}} = 1{,}5 \cdot \frac{2{,}2MVA}{190MVA} = 1{,}74\%$$

The examination of the unit certificate shows that for both factors k_f and k_u given for wind energy plants, the highest value for the network impedance with an angle of 87.5° occurs for switching-in at rated wind with k_u = 1.1. An equivalent voltage of

$$\Delta u_{ers} = k_u \cdot \frac{S_{rE}}{S_{kV}} = 1{,}1 \cdot \frac{2{,}2MVA}{190MVA} = 1{,}27\%$$

is thus obtained according to equation B.2-3. The value obtained is below the admissible value of 2 %. It means according to equation B.2-4 that the plants at rated wind may only be switched-on successively at intervals of more than 47 seconds.

The factor $k_{f(\psi)}$ for a network impedance with an angle of 87.5° is given in the unit certificate with a value of 0.93. According to equation B.2-6, a long-term flicker strength of

$$P_{lt} = \frac{8}{S_{kV}} \cdot \left(\sum_{i=1}^{N_E} N_{E\,120i} \cdot (k_f \cdot S_{rE})^{3,2} \right)^{0,31} = \frac{8}{190} \left(10 \cdot (0{,}93 \cdot 2{,}2)^{3,2} \right)^{0,31} = 0{,}17$$

is obtained, assuming that every generating unit is connected only once within 2 hours. The flicker strength obtained is below the admissible value of 0.46, and the connection of the wind farm within 2 hours is admissible.

Check-up of the „long-term flicker“ network impact

According to equation 2.4.2-2, the long-term flicker of an individual plant is determined as follows

$$P_{\mathrm{lt\,E}} = \mathrm{c} \cdot \frac{S_{\mathrm{rE}}}{S_{\mathrm{kV}}} = 0{,}041$$

For the angle of the network impedance of 87.5° at full load, a plant flicker coefficient of 3.5 is given in the unit certificate. The given long-term flicker strength for a generating unit is obtained with this value.

As 10 equal generating units are to be operated in the wind farm, the total long-term flicker strength is obtained according to the equation 2.4.2-4 as follows

$$P_{\mathrm{lt\ res}} = \sqrt{\mathrm{n}} \cdot P_{\mathrm{lt}\,E} = 0{,}13$$

The totally admissible value at a junction point is P_{ltzul} = 0.46. At bus-bar 2 of the transformer station, the wind farm is entitled to a share of

$$P_{ltzulWP} = P_{ltzul} \cdot \frac{S_{A\max}}{S_{Gesamt}} = 0.46 \cdot \frac{22MVA}{31.5MVA} = 0.32$$

This value is clearly above the flicker generated by the wind farm so that this criterion is complied with.

Check-up of the network impact „Harmonics and inter-harmonics“

The guideline defines the admissible harmonic currents fed-in by the wind farm according to the equation 2.4.3-2.

$$\mathrm{I}_{\nu\,\mathrm{Azul}} = \mathrm{I}_{\nu\,\mathrm{zul}} \cdot \frac{\mathrm{S_A}}{\mathrm{S_{Gesamt}}} = \mathrm{i}_{\nu\,\mathrm{zul}} \cdot \mathrm{S_{kV}} \cdot \frac{\mathrm{S_A}}{\mathrm{S_{Gesamt}}}$$

The values of the related current $i_{\upsilon zul}$ are given in Table 2.4.3-1. The feed-in harmonic currents admissible for the wind farm are indicated in the 3rd column of Table D.2-3.

The 4th column of Table D.2-3 shows the harmonic currents given in the unit certificate related to the rated current of a generating unit. As the generating unit is operated with pulse-modulated converters, a continuous spectrum of harmonics is generated, the current amplitudes applicable to the different ordinal numbers being low. Thus, the inspection record does not show any values if the harmonic current is below 0.1 %. As a result, there exist no measured values above the 14th order.

The guideline recommends in the explications to arithmetically add harmonic currents produced by several generating units only for the 2nd order. There is a quadratic superposition for higher orders.

Ordinal number	$i_{\upsilon zul}$	$I_{\upsilon Azul}$	$(I_{\upsilon,}/I_r)_{WEA}$	$I_{\upsilon WP}$
υ	A/MVA	A	%	A
odd				
3	0.029	3.85	0.1	0.20
5	0.029	3.85	0.3	0.60
7	0.041	5.44	0.5	1.00
9	0.026	3.45	0.1	0.20
11	0.026	3.45	0.3	0.60
13	0.019	2.52	0.1	0.20
15	0.011	1.46	-	-
17	0.011	1.46	-	-
19	0.009	1.19	-	-
21	0.006	0.80	-	-
23	0.006	0.80	-	-
even				
2	0.015	1.99	0.2	1.27
4	0.008	1.00	0.1	0.20
6	0.005	0.66	0.1	0.20
8	0.004	0.50	0.1	0.20
10	0.003	0.40	0.1	0.20
12	0.003	0.33	0.1	0.20
14	0.002	0.28	0.1	0.20

Table D.2-3: Comparison between feed-in harmonic currents admissible to the „Wind farm new“ according to the guideline and those resulting from the unit certificate.

Table D.2-3 shows that the injected harmonic currents are admissible for all orders. The values measured for the current’s inter-harmonics are normally not shown in the extract from the unit certificate. However, the applicant has made available the entire report of the test laboratory. As the superposition of the four generating units is quadratic here, the mea-

sured currents are always below the admissible currents as long as the assessment is restricted to the range above the measurement limit of 0.1 % of the generator’s rated current.

As final assessment, it is decided that harmonics and inter-harmonics in the feed-in current be regarded as admissible.

Check-up of repercussions through commutation notches

Commutation notches are only generated by line-commutated converters with an intermediate DC circuit. Pulse-modulated converters with an intermediate DC voltage circuit do not generate any commutation notches.

Check-up of repercussions on audio-frequency centralized ripple control

The consumption equipment on the existing outgoing feeder are switched through audio-frequency centralized ripple control signals - frequency 217 Hz. Due to the connection of 10 generating units in the proposed wind farm, the impact on the ripple control signal is to be assessed.

Depending on the result of the assessment, an audio-frequency suppressor might be required that would have to be installed either centrally for the two feed-in cables or for each individual plant on the low-voltage side of the wind-energy plant’s transformer.

Check-up of the short-circuit current according to Section 2.5.2

The medium-voltage switchgear of the transformer substation is designed for a rated short-time alternating current of 20 kA. The dynamic strength of the medium-voltage switchgear is tested for the resulting maximum asymmetric short-circuit current of 50 kA.

The network substations at the Müllerdorf transformer station are designed for a rated short-time alternating current of 16 kA. The dynamic strength of the network substations is tested for the resulting maximum asymmetric short-circuit current of 40 kA.

The network transformer provides a short-circuit current of 6.0 kA and, due to the high X/R ratio, a maximum asymmetric short-circuit current of 2.8 times this value, corresponding to 16.8 kA.

The existing wind farm supplies a short-circuit current of 0.64 kA which, in the event of faults with feed-in of inductive reactive power, is also inductive.

According to the unit certificate, the generating units scheduled for the planned wind farm will provide a short-circuit current rapidly decaying to the rated current, which equals 3 times the value of the generating unit's rated current. Taking account of the reactance of the generator transformers, a short-circuit current Ik'' of 1.7 is obtained for all 10 wind energy plants. According to the standards, the maximum asymmetric short-circuit current is determined at 2.5 times the value of this current, i.e. at 4.3 kA. This value is to be added to the surge current caused by the network transformer for the dynamic stress of the equipment.

The sum of shares leads to a maximum short-circuit current of 8.3 kA and a maximum asymmetric short-circuit current of 22.6 kA. These values are safe both with regard to the medium-voltage switchgear in the transformer substation and for the existing network substations.

Check-up of the dynamic network support according to Section 2.5.1

The wind energy plants are designed so as to remain connected to the network in the event of voltage drops in the higher-voltage network. If a level between 0 and 0.8 U_n is undershot, the disconnection of the plant may optionally be stopped within 0.3 s. All settings relate to the low-voltage side of the generator transformers.

If in the event of fault it is required that the plant remains connected to network, two order levels are available:

1. If a voltage adjustable between 0.1 U_n and 0.8 U_n is undershot, the control system will decide on a fault. There are two options:

- Irrespective of the instantaneous generation, the control system changes over to feed-in of an inductive reactive current to the amount of the rated current. The generating plant then contributes to voltage support in the network according to the Guideline.

- The wind energy plant continues to feed-in into the network the current corresponding to the instantaneous generation, with the given active factor.

2. If a level adjustable between 0.5 U_n and 0.9 U_n is exceeded, the system will identify again normal operation.

Change-over orders have a time delay of 20 ms after occurrence of the fault.

It was decided that the „wind farm new“ shall participate in dynamic network support.

When adjusting the levels, it has to be taken into consideration that feed-in of a reactive current to the amount of the rated current will cause a voltage rise of about 12 % at the network impedance of the bus-bar of the transformer substation. As the level adjustments

relate to the low-voltage side of the generator transformer, the voltage drops of the medium-voltage cable links (approximately 3 %) and of the generator transformer (6 %) need to be added so that the low voltage of the wind energy plant increases by about 21 % after switching-over to reactive power feed-in. This value may rise to 24 % if the „wind farm new„ was operated in an under-excited mode with the active factor 0.95 prior to the fault.

Thus, levels must be selected so as to ensure that the voltage after switch-over to operation under fault conditions does not immediately rise above the normal operation level on the low-voltage side. The following levels are selected:

- Switch-over to operation under fault conditions: voltage < 0.65 U_n
- Switch-over back to normal operation: voltage ≥ 0.9 U_n

The difference between switch-over levels of 25 % U_c thus available avoids switch-over of the wind energy plant control system during a fault due to the resulting voltage rise by 24 %.

Check-up of active power output and reactive power provision according to Sections 2.5.3 and 2.5.4

For both items, the requirements of the Guideline are satisfied and can be realized.

Specifications concerning the construction of the connection facility according to Section 3

The connection facility is to be designed in accordance with Figure C.10 of the Guideline.

For the setting of the rise-in-voltage protection, it is essential to take account of the fact that the voltage may rise as compared to the service voltage in particular during overexcited operation with full output.

The rise in voltage at the bus-bar of the transformer substation is insignificant as overexcited operation is only required if voltage support is necessary in normal operation.

The rise in voltage on the low-voltage side of the generator transformers is 5 % during overexcited operation with a active factor of 0.95 due to voltage drops on the medium-voltage cable links and generator transformers. In addition, the voltage on the bus-bar of the transformer substation may be at the upper control limit, i.e. 1.5 % above the agreed service voltage. Thus, in normal operation the voltage may be 6.5 % above the rated voltage of the low-voltage side.

In the event of faults within the wind farm or on the medium-voltage cable link from the wind farm to the transformer substation, the voltage on the low-voltage side of the generator transformers is below 20 %.

The following protection settings are pre-determined:

- superimposed disconnection protection (according to Table 3.2.3.3-1 of the Guideline)

- disconnection protection of the wind energy plant (according to Table 3.2.3.3-2 of the Guideline)

The plant design must comply with the guideline’s specifications. Data links between the transfer station and the different generating units must be installed for the required active and reactive power control.

The „wind farm new“ takes in active power of approximately 30 kW during the period without generation (some 2000 hours). During this period, the capacitive power of the cable of about 1.3 MVA is taken from the network. The active factor is thus 0.023 capacitive. The requirements concerning the active factor at the transfer station during active power input shall be agreed with the network operator.

After the provisional junction point „bus-bar 2 of the transformer substation“ has been determined for the new wind farm, the connection owner shall order the preparation of a plant certificate. On the basis of this document, the network operator shall carry out a final connection assessment and determine the junction point.

E Workflow of the connection processing

1.	Connection owner
Application with: - Data sheet F.1 - Unit certificate F.2	

↓

2.	Network operator
Determination of the appropriate point of connection to the network according to Sections 2.1 to 2.4 and 2.5.2 Designation of S_{kV} and Ψ_k of the network connection point	

↓

3.	Connection owner
Dimensioning of the connection owner’s network Preparation of the plant certificate according to F.3*	

↓

4.	Network operator
Point of connection to the network: Check and final determination	

** Except for generating plants with an apparent connection power S_A of ≤ 1 MVA and a connection line from the network connection point to the generating unit(s) covering a distance of ≤ 2 kilometres.*

F Forms

The network operator shall determine the contents of the forms on his own responsibility.

F.1 Data sheet of a generating plant – medium voltage

Data sheet of a generating plant – medium voltage 1 (4) (to be completed by the customer)				
Plant address	street number and name _____ postal code, place _____			
Connection owner	name, surname _____ street number and name _____ postal code, place _____ phone, e-mail _____			
Generating plant (multiple answers for energy mix)	geothermal energy ☐	hydro power station ☐	wind energy plant ☐	
	fuel cell ☐	CHP plant ☐	photovoltaic plant ☐	
	Place of installation photovoltaic plant:	roof area ☐	open area ☐	façade ☐
	other: _____			
	fuel used (e.g. natural gas, biogas, biomass): _____			
Kind of plant	☐ new installation	☐ extension	☐ revitalization	
Power data	already existing active connection power P_A	_____ kW		
	active connection power P_A to be newly installed	_____ kW		
	maximum apparent power S_{Amax} to be newly installed	_____ kVA		
Injection of the total energy into the system operator's network?		☐ yes	☐ no	
Isolated operation scheduled ?		☐ yes	☐ no	
Customer / feeder number already available ?	☐ no	☐ yes _____		
Brief description: _____				

Data sheet of a generating plant – medium voltage 2 (4)

(to be completed by the customer)

Electrical behaviour at the network connection point

Short-circuit behaviour

Short-circuit currents of the generating plant in the event of a three-phase short circuit at the network connection point according to DIN VDE 0102 (after the occurrence of the short circuit):

I''_{k3}: _____ I_p: _____

Reactive power range (at the network connection point)

Adjustable reactive power range (the load reference arrow system shall apply):

cos φ ind (underexcited) : _____ to cos φ cap (overexcited) : _____

Reactive power compensation	not existing ☐	existing _____ kVAr	controlled: ☐ yes ☐ no
	assigned to:	the generating plant ☐	the generating units ☐
	reactive power per tap _____ kVAr	number of taps _____	
	choking degree / resonant frequency _____		
Audio frequency suppressor	not existing ☐	with audio frequency suppressor for _____ Hz	
Protection devices at the network connection point	**Short-circuit protection**	distance protection relays with V-I starting ☐	
		circuit breaker with over-current time protection ☐	
		on-load fuse combination switch ☐	
		other: _____	
	Earth-fault indicators	kind: _____	
		type: _____	
Data of the connection owner's own medium-voltage network	rated voltage U_{rMS} _____ kV	line length _____ m	
	type of cable _____	cross-section _____	
	network configuration:	resonant-earthed ☐	insulated-neutral ☐ / low-resistance ☐
	MV/MV intermediate transformer (if existing)	connection symbol _____	u_k _____ %
		upper rated voltage U_{rOS} _____ kV	
		lower rated voltage U_{rUS} _____ kV	

Data sheet of generating units – medium voltage **3 (4)** (to be completed by the customer; please fill in a data sheet for every generating unit)	

Generator	asynchronous machine	☐
	double-fed asynchronous machine	☐
	synchronous machine directly coupled	☐
	synchronous machine with converter	☐
	PV generator with inverter	☐
	other _____	
Manufacturer:	_____	type: _____
Number of generating units identical in construction:	_____	

Power data	rated power of a generator unit P_{nG}	_____ kW
	maximum active power P_{Emax}	_____ kW
	rated apparent power S_{rE}	_____ kVA

rated generator voltage U_{nG} _____ V	rated generator current I_{nG} _____ A
maximum current spike factor according to Section 6.2.1	_____
initial symmetrical short-circuit current of the generator I_k“ (with U_{nG})	_____ A

Active factor range (the load reference arrow system shall apply):

cos φ ind (underexcited) : _____ to cos φ cap (overexcited) : _____

Static converters	manufacturer: _____	type: _____	
	rated power _____ kVA	pulse number / switching frequency _____	
	rectifier ☐	frequency converter ☐	AC power controller ☐
	control:	controlled ☐	uncontrolled ☐
	intermediate circuit ☐	inductive ☐	capacitive ☐

Generator transformer	rated power S_{rT} _____ kVA	impedance voltage u_k _____ %
	connection symbol _____	MV voltage steps _____
	rated voltage MV _____	rated voltage LV _____

Data sheet of generating units – medium voltage **4 (4)** (Check list for information to be made available by the customer to the network operator; to be completed by the customer)	
Is a site map attached showing the place and the street, the names of the cadastral district and unit, property name and boundaries and place of installation of the connection facility and generating units (preferably on the scale of 1:10.000, inside built-up area 1:1,000)?	☐
Are the basic circuit diagram of the entire electric facility including the data of the equipment used (a single-phase representation is sufficient), data about customer-owned transformers, medium-voltage connectors, cable lengths and switchgear, basic circuit diagram of the generating plant's protection with settings attached?	☐
Is the unit certificate attached ? (For all different units, one certificate per unit)	☐
Numbers of unit certificates:	_____
Is the plant certificate attached ?	☐
Number of the plant certificate:	_____ dated _____
Is the building permit attached ?	☐
Is the positive preliminary building notification attached ? (not required for photovoltaic plant on approved structures)	☐
Is the approval according to the Federal Air Quality Control Act attached ?	☐
Does a construction schedule exist (please add)	☐
Planned date of initial start up	_____
This data sheet is an integral part of the network impact study and, where applicable, of the network connection acceptance. Should any changes occur, the network operator shall be immediately informed in writing.	
_____ Place, Date	_____ Signature of customer taking connection (connection owner)

F.2 Unit Certificate

LOGO of Certification Office Accredited according to EN 45011 – ISO / IEC Guide 65	**LOGO**
Unit Certificate	**No: 2009-n** Signed Copy No. 1

Manufacturer		
Type of generating unit		
Technical Data	rated power:	
	rated voltage:	
	nominal frequency:	
Network connection rule	**BDEW Guideline „Generating plants connected to the medium-voltage network„** Guideline for generating plants' connection to and parallel operation with the medium-voltage network, June 2008 issue	
Other applicable standards / guidelines	DIN EN 61400-21; FGW-Richtlinie TR 3	

The above-mentioned generating unit complies with the requirements of the BDEW Guideline „Generating units connected to the medium-voltage network“, June 2008 issue.

The manufacturer has furnished evidence of the certification of its quality management system according to ISO 9001.

The certificate comprises the following information:

- technical data of the generating unit, the auxiliary equipment used and of the software version applied;
- schematic representation of the generating unit's structure;
- summed-up information about the generating unit's characteristics.

Place, Date (TT.MM.JJJJ)

Deutscher Akkreditierungs Rat

The use of parts of this certificate is not permitted.

LOGO of certification office, address, e-mail

F.3 Plant Certificate

LOGO of Certification Office Accredited according to EN 45011 – ISO / IEC Guide 65	**LOGO**
Plant Certificate	**No: 2009-n** Signed copy No. 1

Project name	_____	
Customer taking connection	_____	
Power data of the generating plant	Apparent connection power S_A	
	Maximum apparent power S_{Amax}	
	Agreed active connection power P_{AV}	
	Agreed apparent connection power S_{AV}	
	Active connection power P_A	
Agreed range of cos φ	$\cos \varphi = 0.xx_{underexcited}$ to $0.xx_{overexcited}$	
Network connection rule	**BDEW Guideline „Generating plants connected to the medium-voltage network“** Guideline for generating plants' connection to and parallel operation with the medium-voltage network, June 2008 issue	

The above-mentioned generating plant complies with the requirements of the BDEW Guideline „Generating units connected to the medium-voltage network“, June 2008 issue.

The certificate comprises the following information:

- The schematic representation of the generating plant's structure with indication of generating units;
- summed-up information about the generating plant's characteristics.

Place, Date (TT.MM.JJJJ)

Deutscher Akkreditierungs Rat

_____

The use of parts of this certificate is not permitted.

LOGO of certification office, address, e-mail

F.4 Initial start-up records for the connection facility

Initial start-up records for the connection facility – Medium voltage 1 (2) (to be completed by the customer)			
Plant address	station name/bay no _____		
Connection owner	first name, last name _____ phone, e-mail _____		
Plant operator	first name, last name _____ phone, e-mail _____		
Person responsible for operation	first name, last name _____ street no and name _____ postal code, place _____ phone, e-mail _____		
Plant installer (certified company)	company, place _____ phone, e-mail _____		
Type of connection	☐ to bus-bar of transformer substation	☐ spur connection	☐ looping-in
Network configuration	☐ resonant-earthed	☐ insulated-neutral	☐ low-resistance

Generating plant		
Plant Certificate: _____ No		
Technical equipment to reduce feed-in power is available	☐ yes	☐ no
Equipment to monitor the agreed feed-in power is available	☐ yes	☐ no

Documentation (Delivery to distribution network operator at least 1 week prior to initial start-up of the network connection)	Updated project documents of the transfer station available	☐
	Order of the transfer station’s initial start-up available	☐
	Earthing records of the transfer station available	☐
	Verification certificates of current and voltage transformers available	☐

System control agreement	required ☐ yes ☐ no	if so: available	☐
Protection inspection records	required ☐ yes ☐ no	if so: available	☐
Remote control	required ☐ yes ☐ no	if so: tested (incl. remote OFF)	☐
Transmission of metered values	required ☐ yes ☐ no	if so: tested	☐
Measurement for accounting purposes	pre-inspection + commissioning test implemented		☐

Initial start-up records for the connection facility – Medium voltage 2 (2)

(to be completed by the customer)

Network disconnection

Test report about standardized type test available	☐ yes	☐ no
Action of disconnection equipment on	☐ MV switch ☐ LV switch	

Check of settings/disconnection function (accessible at any time to the network operator)

Existing protection functions:	set point (target) (setting range)	set point (actual)		tripped according to value set	visual inspection only
☐ Rise-in-frequency protection f>	51.5 Hz ≤ 100 ms	Hz	ms	☐	☐
☐ Under-frequency protection f<	47.5 Hz ≤ 100 ms	Hz	ms	☐	☐
☐ Rise-in-voltage protection U>>	1.15 U_c ≤ 100 ms	V	ms	☐	☐
☐ Rise-in-voltage protection U>	1.08 U_c ≤ 1 min	V	ms	☐	☐
☐ Under-voltage protection U<	0.8 U_c ≤ 2,7 s	V	ms	☐	☐
☐ Reactive power-under-voltage protection	0.85 U_c ≤ 0.5 s	V	ms	☐	☐

Audio-frequency suppressors

required in the connection agreement	☐ no	☐ yes	☐ LV	☐ MV
built-in			☐ yes	☐ no
test records available			☐ yes	☐ no

Remarks: _____

Within the meaning of the currently applicable DIN VDE provisions and the accident-prevention rule BGV A3, the station is considered to be a closed electrical plant. Access may only be granted to qualified electrical personnel or persons trained in electrical terms. Laymen may enter into the plant only if they are accompanied by the aforementioned persons.

The station has been constructed in accordance with the requirements of the BDEW Guideline on „Generating plants connected to the medium-voltage network“ and the network operator's technical connection requirements. The plant installer has instructed the plant operator during delivery and declared the station to be operational according to BGV A3 Section 3 and Section 5.

_____	_____	_____
Place, Date	Plant operator	Plant installer

The connection facility was connected to the medium-voltage network on: _____

_____	_____	_____
Place, Date	Plant operator	Network operator

F.5 Initial start-up records for generating units

Initial start-up records for generating units – Medium voltage
(to be completed by the customer)

Plant address	station name/bay no	_____
Plant operator	first name, last name	_____
	phone, e-mail	_____
Plant installer (certified company)	company, place	_____
	phone, e-mail	_____

Generating unit (type designation)

feed-in power: kW kind:

Unit certificate No: _____

Protective Disconnection

Action of the protective disconnection device on: ☐ MV switch ☐ LV switch

Check of settings

Existing protection functions:	set point (target)		set point (actual)		tripped according to value set	visual inspection only
☐ Rise-in-frequency protection f>	Hz	ms	Hz	ms	☐	☐
☐ Under-frequency protection f<	Hz	ms	Hz	ms	☐	☐
☐ Rise-in-voltage protection U>>	V	ms	V	ms	☐	☐
☐ Under-voltage protection U<	V	ms	V	ms	☐	☐
☐ Under-voltage protection U<<	V	ms	V	ms	☐	☐

Audio-frequency suppressors

required in the connection agreement ☐ no ☐ yes ☐ LV ☐ MV

built-in ☐ yes ☐ no

test records available ☐ yes ☐ no

Within the meaning of the currently applicable DIN VDE provisions and the accident-prevention rule BGV A3, the generating unit is considered to be a closed electrical plant. Access may only be granted to qualified electrical personnel or persons trained in electrical terms. Laymen may enter into the plant only if they are accompanied by the aforementioned persons.
The generating unit has been constructed in accordance with the requirements of the BDEW Guideline on „Generating plants connected to the medium-voltage network“ and the network operator’s technical connection requirements. The plant installer has instructed the plant operator during delivery and declared the connection facility to be operational according to BGV A3 Section 3 and Section 5.

The generating unit was commissioned on: _____

_____	_____	_____
Place, Date	Plant operator	Plant installer