U.S. Department of Energy

Livermore Site Office, Livermore, California 94551

Lawrence Livermore National Laboratory

Lawrence Livermore National Security, LLC, Livermore, California 94551

UCRL-AR-234697

Interim Remedial Design Document for the Pit 7 Complex at Lawrence Livermore National Laboratory Site 300

Authors:

M. Taffet
V. Dibley
L. Ferry
B. Daily
Z. Demir

Contributors:

K. Heyward
G. Lorega
V. Madrid
D. Mason*
J. Radyk*
S. Rose**
J. Valett*

March 2008

* Weiss Associates, Emeryville, California
** Winzler and Kelly Consulting Engineers, San Francisco, California

Environmental Restoration Department

This work performed under the auspices of the U.S. Department of Energy by Lawrence Livermore National Laboratory under Contract DE-AC52-07NA27344.

UCRL-AR-234697

Interim Remedial Design for the Pit 7 Complex at Lawrence Livermore National Laboratory Site 300

Authors:

M. Taffet
V. Dibley
L. Ferry
B. Daily
Z. Demir

Contributors:
K. Heyward
G. Lorega
V. Madrid
D. Mason*
J. Radyk*
S. Rose**
J. Valett*

March 2008

* Weiss Associates, Emeryville, California
** Winzler and Kelly Consulting Engineers, San Francisco, California

Environmental Restoration Department

Certification

I certify that the work presented in this report was performed under my supervision. To the best of my knowledge, the data contained herein are true and accurate, and the work was performed in accordance with professional standards.

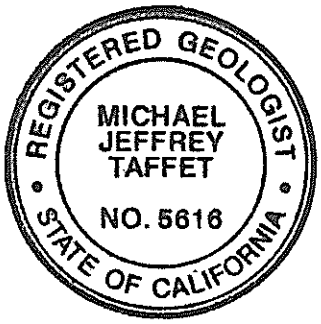

4.4.08

Michael J. Taffet, PhD. Date
California Professional Geologist
No. 5616
License expires: May 31, 2009
California Certified Hydrogeologist
No. 129
License expires: May 31, 2009

Table of Contents

Executive Summary **1**

1. Introduction **1**

1.1. Location and Physical Setting 2

1.2. Site History 2
1.2.1. Pit 3 Landfill 3
1.2.2. Pit 4 Landfill 3
1.2.3. Pit 5 Landfill 3
1.2.4. Pit 7 Landfill 3

1.3. Site Characterization 3

1.4. Previous Remediation 4

1.5. Regulatory History 5

2. Geology and Hydrogeology **5**

2.1. Geology 5

2.2. Hydrogeology 6
2.2.1. Surface Water 6
2.2.2. Ground Water 6

3. Contaminant Concentrations and Distribution **7**

3.1. Nature and Extent of Contamination in Soil and Rock 8

3.2. Nature and Extent of Contamination in Ground Water 8

3.3. Nature and Extent of Contamination in Surface Water 11

4. Summary of Human Health and Ecological Risks **11**

4.1. Human Health and Exposure Assessment 11

4.2. Ecological Assessment 11

5. Remedial Design **12**

5.1. Remedial Strategy 12

5.2. Risk and Hazard Management 13
5.2.1. Institutional/Land Use Controls 14
5.2.2. Ecological Hazard Controls 14

5.3. Monitored Natural Attenuation of Tritium in Ground Water 15

5.4. Ground Water Extraction and Treatment 17
5.4.1. Extraction Wellfield Design 17
5.4.2. Treatment System Design and Specifications 21
5.4.3. Discharge of Treated Ground Water 21

5.4.4. Performance Standards and Monitoring for the Ground Water Extraction and Treatment System 23
5.4.5. Controls and Safeguards 23

5.5. Source Control through Drainage Diversion 24
5.5.1. Engineered Drainage Diversion Design and Specifications 24
5.5.2. Performance Standards and Monitoring for the Drainage Diversion System 28
5.5.3. Construction and Operations and Maintenance Procedures 30

5.6. Contingency Planning 30

5.7. Construction, Startup, and Document Schedule 30

5.8. Cost Estimates 30

6. Remedial Action Work Plan 32

6.1. Quality Assurance/Quality Control and Health and Safety Plans 32

6.2. Monitoring and Reporting Programs 32
6.2.1. Monitored Natural Attenuation of Tritium in Ground Water 33
6.2.2. Ground Water Extraction and Treatment System Influent and Effluent 33
6.2.3. Ground Water Extraction and Monitor Wells 33
6.2.4. Drainage Diversion System 34

6.3. Hazardous Waste Handling 34

6.4. Performance Assessment 34
6.4.1. Tritium Monitored Natural Attenuation Performance Assessment 35
6.4.2. Ground Water Extraction and Treatment System Performance Assessment 35
6.4.3. Engineered Drainage Diversion Performance Assessment 35

6.5. Requirements for Closure 36
6.5.1. Ground Water Cleanup 36

7. References 37

8. Acronyms and Abbreviations[a] 39

List of Figures

Figure 1. Location of LLNL Site 300.

Figure 2. Location of the Pit 7 Complex and contaminant plumes in ground water.

Figure 3. Pit 7 Complex area map showing topography, roads, wells, lysimeters, springs, and landfills.

Figure 4. Conceptual hydrogeological model for the Pit 7 Complex (view is to the northeast).

Figure 5. Ground water elevations in the Qal/WBR HSU at the Pit 7 Complex (2006, or most recent data).

Figure 6. Ground water elevations in the $Tnbs_0$ HSU at the Pit 7 Complex (2006, or most recent data).

Figure 7. Extent of tritium in Qal/WBR HSU ground water at the Pit 7 Complex (2006, or most recent data).

Figure 8. Extent of tritium in $Tnbs_0$ HSU ground water at the Pit 7 Complex (2006, or most recent data).

Figure 9. Extent of uranium activities and $^{235}U/^{238}U$ isotope atom ratios in Qal/WBR HSU ground water at the Pit 7 Complex (2006, or most recent data).

Figure 10. Extent of uranium activities and $^{235}U/^{238}U$ atom ratios in $Tnbs_0$ HSU ground water at the Pit 7 Complex (2006, or most recent data).

Figure 11. Extent of perchlorate in Qal/WBR HSU ground water at the Pit 7 Complex (2006, or most recent data).

Figure 12. Extent of perchlorate in $Tnbs_0$ HSU ground water at the Pit 7 Complex (2006, or most recent data).

Figure 13. Extent of nitrate in Qal/WBR HSU ground water at the Pit 7 Complex (2006, or most recent data).

Figure 14. Extent of nitrate in $Tnbs_0$ HSU ground water at the pit 7 Complex (2006, or most recent data).

Figure 15. Extent of total VOCs in Qal/WBR HSU ground water at the Pit 7 Complex (2006, or most recent data).

Figure 16. Extent of total VOCs in $Tnbs_0$ HSU ground water at the Pit7 Complex (2006, or most recent data).

Figure 17. Pit 7 Complex institutional/land use controls.

Figure 18. Expected ground water capture zones for the Qal/WBR HSU at the Pit 7 Complex.

Figure 19. Expected ground water capture zones for the $Tnbs_0$ HSU at the Pit 7 Complex.

Figure 20. Location of the Pit 7 Complex ground water extraction and treatment system and effluent injection trench.

Figure 21A. Piping and instrumentation diagram for the Pit 7 Complex ground water extraction and treatment system (equipment and piping diagram).

Figure 21B. Piping and instrumentation diagram for the Pit 7 Complex ground water extraction and treatment system (electronic and electrical diagram).

Figure 22. Locations of drainage diversion system components at the Pit 7 Complex.

List of Tables

Table 1. Description of institutional/land use controls for the Pit 7 Complex.
Table 2. Summary of hydraulic test data for the Pit 7 Complex[a].
Table 3. Parameters used in the WinFlow and mixed tank model.
Table 4. Design specifications for the Pit 7 Complex ground water extraction wells.
Table 5. Design specifications for the Pit 7 Complex ground water extraction and treatment system.
Table 6. Comparison of rainfall intensity and total runoff calculations for the Pit 7 eastern hillslope.
Table 7. Pit 7 Complex remedial action and document schedule.
Table 8. Cost estimate for compliance monitoring and MNA at the Pit 7 Complex.
Table 9. Cost estimate for the Pit 7 Complex ground water extraction and treatment system.
Table 10. Cost estimate for the Pit 7 Complex engineered drainage diversion system.

List of Appendices

Appendix A. Ground Water Elevation and Analytical Chemistry Data Tables. (See attached CD)
Appendix B. Compliance Monitoring Plan and Substantive Requirements for the Pit 7 Complex Remedial Action.
Appendix C. Summary of Ion-Exchange Resin for Uranium Treatment
Appendix D. Construction Quality Assurance/Quality Control Plan.
Appendix E. Construction Health and Safety Plan.
Appendix F. Operations and Maintenance Quality Assurance/Quality Control Plan.
Appendix G. Operations and Maintenance Health and Safety Plan.
Appendix H. Title II Design Drawings for the Drainage Diversion System.

Executive Summary

The U.S. Department of Energy (DOE) and Lawrence Livermore National Laboratory (LLNL) have prepared this Remedial Design report for the Pit 7 Complex of the Building 850/Pit 7 Complex Operable Unit at Site 300. The Pit 7 Complex consists of the Pits 3, 4, 5, and 7 landfills. LLNL Site 300 is a DOE-owned experimental test facility operated by Lawrence Livermore National Security, LLC.

A remedial action for the Pit 7 Complex was selected in the Interim Site-Wide Record of Decision Amendment for LLNL Site 300 (DOE, 2007). This Remedial Design report summarizes the site history, geology, hydrogeology, nature and extent of contamination, human health and ecological risk assessment, previous remediation activities, and presents the planned remedial design. In addition, it presents a Remedial Action Work Plan for the selected remedy.

From 1958 until 1988, debris from explosive tests conducted at Site 300 firing tables was disposed in unlined landfills Pits 3, 4, 5, and 7 at the Pit 7 Complex. The waste placed in the pits included wood, plastic, material and debris from tent structures, pea gravel, and exploded test assemblies that frequently contained tritium and depleted uranium. During years of above-normal rainfall (i.e., 1997-1998 El Niño), ground water rose into the bottom of the landfills and the underlying bedrock. This resulted in the release of chemicals and radionuclides to the environment. Contaminants of concern (COCs) include:

- Subsurface soil/rock: tritium and uranium.
- Ground water: tritium, uranium, 1,1-dichloroethene, trichloroethene, nitrate, and perchlorate.

No COCs were identified in surface soil or surface water.

The selected interim remedy for cleanup at the Pit 7 Complex consists of:

- Monitoring to determine if the cleanup is adequately protecting human health and the environment and to measure cleanup progress.
- Risk and hazard management, including institutional/land use controls, to control exposure where an unacceptable risk to human health remains.
- Monitored natural attenuation to allow tritium activities in subsurface soil/rock and ground water to decline naturally.
- Installing an engineered drainage diversion system to hydraulically isolate the contaminant sources in the landfills and underlying bedrock from subsurface water, thereby preventing infiltration of rainwater runoff that can result in ground water rising into the landfills and releasing contaminants.
- Extracting and treating ground water to reduce uranium, perchlorate, nitrate, and volatile organic compound (VOC) concentrations in ground water to meet the cleanup standards that will be selected in the Final Site-Wide ROD in 2008.

1. Introduction

This report describes the remedial design for the Pit 7 Complex of the Operable Unit (OU) 5 at Lawrence Livermore National Laboratory (LLNL), Site 300. The Pit 7 Complex consists of the Pits 3, 4, 5, and 7 landfills. Site 300 is a U.S. Department of Energy (DOE) experimental test facility located in the southeastern Altamont Hills of the Diablo Range, about 17 miles east-southeast of Livermore and 8.5 miles southwest of downtown Tracy, California (Figure 1).

In February 2007, an Amendment to the Interim Site-Wide Record of Decision (ROD) for the Pit 7 Complex (DOE, 2007) (hereafter referred to as the Interim ROD Amendment) was signed by DOE, the U.S. Environmental Protection Agency (EPA), the California Department of Toxic Substances Control (DTSC), and the Regional Water Quality Control Board (RWQCB). In the Interim ROD Amendment, interim remedial actions were selected for the Pit 7 Complex. A Final Site-Wide ROD is scheduled for 2008 that will identify final ground water cleanup standards.

The major components of DOE's interim remedy for the Pit 7 Complex are:

- Monitoring to determine if the cleanup is adequately protecting human health and the environment and to measure cleanup progress.
- Risk and hazard management, including institutional/land use controls, to control exposure where an unacceptable risk to human health remains.
- Monitored natural attenuation to allow tritium activities in subsurface soil/rock and ground water to decline naturally.
- Installing an engineered drainage diversion system to hydraulically isolate the contaminant sources in the landfills and underlying bedrock from subsurface water, thereby preventing infiltration of rainwater runoff that can result in ground water rising into the landfills and releasing contaminants.
- Extracting and treating ground water to reduce uranium, perchlorate, nitrate, and volatile organic compound (VOC) concentrations in ground water to meet the cleanup standards that will be selected in the Final Site-Wide ROD.

DOE is the lead agency for cleanup at Site 300 with regulatory oversight by the U.S. EPA, the DTSC, and the RWQCB.

The scope and format of this Remedial Design (RD) report are consistent with EPA guidance documents (EPA, 1989; 1990). It contains engineering design specifications for the ground water extraction and treatment system and drainage diversion system, system descriptions, monitoring and construction schedules, and cost estimates for implementing the selected remedy. It also includes Quality Assurance/Quality Control (QA/QC) and Health and Safety Plans for construction and operation and maintenance (O&M), and the requirements for project closeout.

Section 1 of this RD report describes the location of the Pit 7 Complex, the operational history, previous investigations and remedial actions, and regulatory history. Section 2 presents a summary of the geology and hydrogeology. Section 3 is a summary of contaminant distribution. Section 4 is a summary of previous human health and ecological risk and hazard analyses. Section 5 presents the remedial design. Section 6 contains the Remedial Action Work Plan.

The following appendices are also included:

Appendix A: Ground Water Elevation and Analytical Chemistry Data Tables.

Appendix B: Compliance Monitoring and Substantive Requirements for the Pit 7 Complex Remedial Action.

Appendix C: Summary of Ion-Exchange Resin for Uranium Treatment.

Appendix D: Construction Quality Assurance/Quality Control Plan.

Appendix E: Construction Health and Safety Plan.

Appendix F: Operations and Maintenance Quality Assurance/Quality Control Plan.

Appendix G: Operations and Maintenance Health and Safety Plan.

Appendix H: Title II Design Drawings for the Drainage Diversion System.

1.1. Location and Physical Setting

The Pit 7 Complex is located in the northwest portion of Site 300 (Figure 2) and consists of the Pits 3, 4, 5, and 7 landfills. Topography, springs, monitor well locations, and cultural features in the Pit 7 Complex are shown on Figure 3. The Pit 7 Complex is located within a broad northwest-southeast trending valley. The longitudinal axes of Pits 3, 4, 5, and 7 are parallel to the valley axis. A shallow ephemeral drainage channel occupies the east side of this valley and extends from the Pit 7 Complex to the southeast to a point several hundred feet (ft) east of Building 850. Storm water generally runs off slopes and rapidly infiltrates alluvium and colluvium. Water flows in the channel on the west side of the Pit 7 Complex valley during and after high intensity storms. Otherwise, surface water is not present in the immediate area. Elevation ranges from about 1,700 ft above mean sea level (msl) at the ridge top to the west of the Pit 7 Complex to about 1,300 ft above msl in the valley bottom.

1.2. Site History

Site 300 is primarily a high-explosives test facility that supports the LLNL weapons program in research, development, and testing associated with weapons components. LLNL used the Pit 7 Complex landfills to dispose firing table debris and gravel. These pits were constructed by excavating topsoil and alluvial materials to an average depth of 15 to 20 ft (Taffet et al., 1989). The pits were filled incrementally from southeast to northwest with the exception of Pit 5, which was filled from northwest to southeast (Simmons, 1992). The majority of the waste material in the pits came from the firing tables at Buildings 850 and 851, where aboveground detonations were conducted. LLNL typically removed gravel and experimental debris from the firing tables and deposited them in the pits after the gravels became too compacted to deaden the shock produced during detonations. The shock generated by explosives shots pulverizes the gravel into smaller size fractions. The resulting fine-grained material is denser and more compact than the original gravel and poorly attenuates the vibration caused by the explosives test. The waste placed in the pits included wood, plastic, material and debris from tent structures, pea gravel, and exploded test assemblies, some of which contained tritium and depleted uranium.

Tritium was used primarily from 1963 to 1978, when approximately 21,000 curies (Ci) of tritium were shipped to Site 300. After 1978, tritium use was sharply curtailed, and the total usage from 1978 to 1988 was approximately 13 Ci, according to the Site 300 programs. About

99 percent of the tritium shipped to Site 300 was used at Building 850 (95%) and Building 851 (4%), so the debris disposed in the Pit 7 Complex contains the majority of the tritium residue disposed in Site 300 landfills (Buddemeier, 1985). Metals, including depleted uranium, were also used in explosive tests. Depleted uranium is natural uranium from which most of the uranium-235 (^{235}U) isotope has been removed leaving the less radioactive uranium-238 (^{238}U) as the dominant remaining isotope.

The history of each landfill pit is summarized below:

1.2.1. Pit 3 Landfill

The Pit 3 landfill was opened in 1958 and closed in 1967. The area and volume of Pit 3 are 6,180 square yards (yd^2) and 26,221 cubic yards (yd^3), respectively (Lindeken and Hieb, 1989).

1.2.2. Pit 4 Landfill

The Pit 4 landfill was opened in 1968 and closed in 1974. The area and volume of Pit 4 are 855 yd^2 and 2,796 yd^3, respectively.

1.2.3. Pit 5 Landfill

The Pit 5 landfill was opened in 1968 and closed in 1979. The area and volume of Pit 5 are 9,100 yd^2 and 29,907 yd^3, respectively. The "panhandle" of the southern part of Pit 5 was originally planned as part of the pit, but interviews with Site 300 employees suggest that this section was never actually excavated.

1.2.4. Pit 7 Landfill

The Pit 7 landfill was opened in 1978 and closed in 1988. The area and volume of Pit 7 are approximately 6,250 yd^2 and 31,111 yd^3, respectively. Although most of the waste material in Pit 7 was generated at Buildings 850 and 851, some gravel from firing tables at Buildings 801, 802, 812, and 845 were deposited in Pit 7 in 1988.

1.3. Site Characterization

Hydrogeologic investigation within the Pit 7 Complex area began in 1981with the Hazardous Waste Assessment Project study of the hydrogeology, geology, and ground water chemistry associated with the Site 300 landfills (Raber et al., 1982; Raber and Carpenter, 1983). From 1981 to 2000, environmental investigation activities included records searches and interviews; installation of ground water monitor wells; sampling and chemical analysis of soil, bedrock, ground water, surface water, and vadose zone moisture; soil vapor surveys; neutron probe studies; surface and subsurface geophysical surveys; hydraulic testing; evaluating observed water level responses to rainfall events; geologic mapping; ground water transport modeling; geologic and hydrogeologic characterization; and risk assessment. Summaries of environmental investigations conducted prior to 2000 are presented in the Site Wide Remediation Investigation (SWRI) report (Webster-Scholten, 1994), the Building 850/Pits 3 and 5 SWRI Addendum (Taffet et al., 1996), the Draft Engineering Evaluation/Cost Analysis for the Building 850/Pits 3 and 5 Operable Unit (Taffet et al., 1997), and the Site-Wide Feasibility Study (SWFS) for LLNL Site 300 (Ferry et al., 1999).

In February 2000, DOE and the regulatory agencies agreed that additional site characterization and evaluation of cleanup options were necessary prior to selecting a remedy for the Pit 7 Complex. From 2000 through 2003, additional site characterization and feasibility study activities included:

- Installing nine additional ground water monitor wells to delineate the extent of tritium originating at the Pit 7 Complex.
- Monitoring ground water from existing and new monitor wells.
- Performing a surface geophysical survey to corroborate results of other methods (i.e. borehole logs/cone penetrometer data) and independently define pit bottoms and geometry of alluvium/weathered bedrock.
- Conducting a helium-3 (^{3}He) soil vapor survey to corroborate results of other methods (soil moisture and soil vapor tritium data) and independently estimate the total number of curies of tritium remaining in the pits and the vadose zone.
- Installing horizontal wells, a shallow drain system, and surface water flow measurement devices to assess whether hydraulic control methods could be used to dewater and prevent recharge from causing water table rises into the Pit 7 Complex landfills.
- Installing and monitoring piezometer nests to determine which shallow water-bearing zones may convey water into the valley bottom where the Pit 7 Complex is located.
- Conducting a water budget study to refine the hydrogeological conceptual model for the Pit 7 Complex area, and to support evaluation of remedial alternatives designed to divert water away from the pits.
- Evaluating the Elk Ravine Fault system regarding its potential effects on ground water transport and future plume movement downgradient of the Pit 7 Complex.
- Investigating and evaluating existing and innovative remedial technologies.

The results of this work are presented in the Remedial Investigation/Feasibility Study (RI/FS) for the Pit 7 Complex (Taffet et al., 2005).

1.4. Previous Remediation

In 1992, an engineered cap was constructed over Pits 4 and 7 (referred to as the Pit 7 Cap) in compliance with Resource Conservation and Recovery Act (RCRA) requirements. The design included interceptor trenches and surface water drainage channels, a top vegetative layer to prevent erosion, a biotic barrier layer to minimize animal burrowing, and a clay layer of very low permeability to prevent infiltration of precipitation and shallow subsurface interflow that could result in leaching of contaminants. The Pit 7 cap also covers approximately 25–30% of Pit 3. More complete information on the cap design is presented in Volume II, Closure and Post-Closure Plans, Landfill Pits 1 and 7 (Rogers/Pacific Corporation, 1990). The original compacted native soil cover on most of Pit 3 and all of Pit 5 remains intact.

In 2003, a permeable reactive barrier was installed downgradient of the Pit 7 Complex as part of an *in situ* treatability study to test the effectiveness of this technology in removing uranium from ground water. The treatability study results indicated that the *in situ* permeable reactive barrier would not be the most effective treatment technology for removing uranium from ground

water. The use of this technology would result in longer cleanup times because it is limited by *in situ* ground water flow rates to carry the uranium to the reactive barrier for treatment.

1.5. Regulatory History

Prior to 1990, characterization and remediation activities at the Pit 7 Complex were conducted under the joint oversight of the RWQCB and DTSC under an interim agreement. In 1990, Site 300 was placed on the EPA's National Priorities List. In June 1992, DOE, EPA, DTSC, and the RWQCB signed a Federal Facility Agreement to facilitate compliance with the Comprehensive Environmental Response, Compensation, and Liability Act of 1980 (CERCLA), as amended by the Superfund Amendments and Reauthorization Act of 1986 (SARA). As part of the CERCLA process, DOE/LLNL prepared a series of reports for the Building 850/ Pit 7 Complex:

- The Site-Wide Remedial Investigation report (Webster-Scholten, 1994), Chapter 11 provided information on site operations, hydrogeology, contaminant distribution and fate and transport, and risk and hazard calculations.
- The Addendum to the Site-Wide Remedial Investigation report (Taffet et al., 1996), Site 300 Building 850/Pit 7 Complex Operable Unit provided additional information on the site hydrogeology, contaminant distribution and fate and transport, and potential risks and hazard indices.
- The Building 850/Pits 3 and 5 OU Engineering Evaluation/Cost Assessment (Taffet et al, 1997) provided a preliminary scoping and costing of potential removal actions for the subarea.
- The Ground Water Tritium Plume Characterization Summary Report for the Building 850/Pits 3 and 5 Operable Unit (Ziagos and Reber-Cox, 1998) further characterized the site hydrogeology, contaminant distribution in ground water, and fate and transport.
- The Remedial Investigation/Feasibility Study for the Pit 7 Complex (Taffet et al., 2005) screened and evaluated remedial alternatives.
- The Interim Site-Wide Record of Decision (ROD) Amendment for the Pit 7 Complex (U.S. DOE, 2007).

2. Geology and Hydrogeology

This section discusses the geology (Section 2.1) and hydrogeology (Section 2.2) of the Pit 7 Complex area.

2.1. Geology

The Pit 7 Complex area is underlain by weathered and fractured sedimentary rocks. A veneer of soil and colluvium covers the western slope, while the eastern slope is steeper and consists of resistant sandstone outcrops. The valley bottom contains an ephemeral drainage channel and associated Quaternary alluvium and weathered bedrock (Qal/WBR) consisting of fine-grained soil, decomposed bedrock, and colluvium eroded from the hillslopes. The channel

extends southeastward to the Building 850 area, where it merges with the northeast-trending drainage channel in Doall Ravine.

The bedrock in the Pit 7 Complex area consists primarily of interbedded siltstone, sandstone, conglomerate, and minor claystone of the lower Neroly Formation ($Tnbs_1$). At the base of the $Tnbs_1$ is a 10-foot thick silty sandstone ($Tnbs_0$). The $Tnbs_0$ is overlain by a several foot thick claystone confining layer and underlain by 50 to 100 ft of interbedded siltstone, claystone, and minor sandstone ($Tnsc_0$). The $Tnsc_0$ overlies sandstone of the Cierbo Formation (Tmss).

2.2. Hydrogeology

This section describes the general framework of the hydrogeology of the Pit 7 Complex area, including the occurrence of surface water and ground water. Figure 4 shows the conceptual hydrogeologic model for the Pit 7 Complex.

2.2.1. Surface Water

Due to the semi-arid climate, natural surface water in the Pit 7 Complex area is relatively rare and has been observed as surface runoff only during heavy rainfall events. When surface runoff is generated during heavy El Niño-type events, surface water generally flows southeastward toward Doall Ravine.

The closest surface water body to the Pit 7 Complex in the direction of bedrock ground water flow is Spring 24. This spring is located in the next valley northeast of the Pit 7 Complex, approximately 2,500 ft from the landfills (Figure 3). Surface water at Spring 24 is addressed as part of the remedy for the Building 850 area because Building 850 is the closest upgradient contaminant source and the source of contamination detected in Spring 24. For this reason, surface water in Spring 24 was not evaluated specifically for the Pit 7 Complex area.

2.2.2. Ground Water

In the Pit 7 Complex, a shallow, ephemeral water-bearing zone within Qal/WBR channel fill deposits is in contact with an underlying bedrock water-bearing zone within the $Tnbs_0$ sandstone. The spatial and temporal distribution of ground water in the Pit 7 Complex area is influenced by several factors, including: episodic El Niño-type rainfall events, hill slope steepness and ground cover, geologic structures (including bedding orientation, fractures, and faults), and the inclined axes of alluvial drainage channels.

Saturated stratigraphic intervals in the Pit 7 Complex area have been grouped into hydrostratigraphic units (HSUs). An HSU is a mappable water-bearing zone that exhibits similar hydraulic and geochemical properties. Three HSUs have been identified in the Pit 7 Complex: (1) Qal/WBR, (2) $Tnbs_0$, and (3) Tmss HSUs, as described below.

2.2.2.1. Quaternary alluvium/weathered bedrock (Qal/WBR) HSU

The Qal/WBR HSU is an ephemeral, unconfined, transmissive water-bearing zone. When saturated, ground water in the Qal/WBR HSU flows to the southeast down the inclined valley axis. Ground water potentiometric surface contours for the Qal/WBR HSU in 2006 are shown in Figure 5. Water level data indicate that during extended periods of drought (e.g., 1989 to 1994), most of the wells completed in the Qal/WBR HSU were either dry or contained very little water. During the dry season in typical rainfall years, any water present in this HSU occurs mostly in

weathered bedrock at the base of the HSU. The saturated thickness of the Qal/WBR HSU ranges from 0 to 45 ft, with the depth to ground water ranging from 5 to 50 ft below ground surface. Recharge of this HSU occurs at the base of the hillsides and within the valley bottom. Hydraulic conductivity, as calculated from hydraulic tests in wells screened in the Qal/WBR HSU in the Pit 7 Complex area, ranges from 10^{-3} to 10^{-4} centimeters per second (cm/sec). Assuming a porosity of 0.3, the average ground water velocity ranges from 60 to 100 ft per year in the Qal/WBR HSU. These ground water velocities are only relevant when there is continuous saturation within the HSU, i.e., during wet seasons. Therefore, over the course of a year or years, cumulative ground water movement is slower than this velocity range would suggest.

Contamination from the Pit 7 Complex is present in the Qal/WBR HSU ground water. However, the geometry of the Qal/WBR HSU and lack of recharge causes large portions of this HSU to become unsaturated, significantly slowing the migration of contaminants.

2.2.2.2. Lower Neroly Formation ($Tnbs_0$) HSU

Ground water in the $Tnbs_0$ HSU flows to the east-northeast (Figure 6). In addition to flow in porous media, there are also preferential flow paths in localized fractures. Ground water in the $Tnbs_0$ HSU is unconfined in the vicinity of the Pit 7 Complex landfills and confined to the east in the vicinity of Elk Ravine. The confining layer is a 2- to 3-foot thick claystone.

The saturated thickness of the $Tnbs_0$ HSU ranges from 5 to 15 ft, with the depth to ground water ranging from 30 to 250 ft below ground surface. Hydraulic conductivity, as calculated from hydraulic tests in wells screened in the $Tnbs_0$ HSU in the Pit 7 Complex area, ranges from 10^{-4} to 10^{-5} cm/sec. Assuming a porosity of 0.3, the average ground water velocity ranges from 6 to 12 ft per year in the $Tnbs_0$ HSU. The extent of $Tnbs_0$ strata and the extent of saturation within this HSU do not extend beyond the Site 300 boundary in the direction of ground water flow, and therefore are limited in the northeast direction. $Tnbs_1$ and $Tnbs_0$ strata comprise one continuous HSU on the northeast side of the Elk Ravine Fault Zone. Several faults and other geologic structures also impede ground water flow in the northeast direction. The $Tnbs_0$ HSU is the bedrock water-bearing zone that transmits contaminated ground water in the Pit 7 Complex.

2.2.2.3. Cierbo Formation Aquifer

The Cierbo Formation sandstone (Tmss) HSU underlies the Neroly Formation in the Pit 7 Complex area. The Tmss HSU is unconfined beneath the Pit 7 Complex landfills and is under confined to flowing artesian conditions in the adjacent Building 850 area. The upper part of the Tmss HSU is unsaturated beneath the Pit 7 Complex. The depth to ground water in the Tmss aquifer beneath the Pit 7 Complex is estimated to be about 100 ft. The Tmss aquifer is hydraulically separated from the $Tnbs_0$ HSU by a 30- to 50-foot thick, fine-grained stratigraphic unit ($Tnsc_0$). Contaminants have not been detected in the Tmss HSU. This lack of contamination is likely due to the integrity of the overlying $Tnsc_0$ confining layer and the upward hydraulic gradient that exists between the confined portions of this aquifer and overlying water-bearing zones.

3. Contaminant Concentrations and Distribution

This section describes the nature and extent of contamination in soil/rock (Section 3.1) and ground water (Section 3.2) in the Pit 7 Complex area.

3.1. Nature and Extent of Contamination in Soil and Rock

Surface (0- to 0.5-ft depth) and subsurface (below 0.5-ft depth) soil and bedrock samples were collected in the Pit 7 Complex area and analyzed for a variety of chemicals and radionuclides, including tritium, uranium, metals, and VOCs. Although some of these substances detected in soil and rock are attributed to the Pit 7 Complex landfills, some occur naturally. Background concentrations for naturally occurring substances were established in Section 4.2.2 of the SWRI and Appendix A of the SWFS.

Tritium and uranium are COCs in subsurface soil and bedrock in the Pit 7 Complex. No COCs were identified in surface soil in this area.

Geospatial analysis of soil analytic data from within and adjacent to Pits 3 and 5 indicate that a total of 12 Ci of tritium and 1.5 Ci of depleted uranium still exist in this source area. Of the 12 Ci of tritium, an estimated 2.4 Ci (20%) remain in Pit 3, 0.5 Ci (4%) remain in Pit 5, and 9.1 Ci (76%) are located in the unsaturated bedrock underlying the pits. Of the 1.5 Ci of depleted uranium remaining, an estimated 0.5 Ci (33%) remain in the pits and 1.0 Ci (67%) are located in the underlying bedrock. Uranium and tritium sources appear to be co-located in both pits (e.g., the highest tritium activity was detected where the highest depleted uranium activity was detected). The most significant tritium source appears to be located near the bottom of Pit 3 and in the underlying unsaturated bedrock. Otherwise, the distribution of tritium within the landfills is relatively homogeneous. The magnitude of the residual uranium sources appears to be comparable in both pits, with about 67% of the total uranium in the immediate area of the pits occurring in the underlying bedrock. Based on releases of depleted uranium to ground water downgradient of Pit 7, depleted uranium is assumed to be in the buried waste in this landfill.

The presence of significant amounts of contamination in unsaturated bedrock beneath the pits is a significant factor in the design of the drainage diversion system.

3.2. Nature and Extent of Contamination in Ground Water

Ground water samples have been collected in the Pit 7 Complex area and analyzed for a broad range of parameters, including radionuclides, metals, perchlorate, nitrate, HE compounds, polychlorinated biphenyls, and VOCs. Tritium, uranium, perchlorate, nitrate, and VOCs have been identified as COCs in ground water in this area. Figures 7 through 16 show the 2006 distribution of tritium, uranium, perchlorate, nitrate, and VOCs in ground water in both the Qal/WBR and $Tnbs_0$ HSUs. Ground water concentration data for samples collected during the first semester of 2007 from the three new extraction wells (W-PIT7-2305, W-PIT7-2306, and W-PIT7-2307) are included on these figures, where available.

Tritium activities in Qal/WBR HSU ground water (Figure 7) are dependent on the temporally and spatially varying extent of saturation exhibited by this water-bearing zone. During drought years, this HSU becomes largely unsaturated as shallow ground water levels drop. However, during seasons with heavy rainfall events, the extent of saturation in the Qal/WBR HSU increases laterally and vertically, and it is the first to be impacted by releases from the pits. The distribution of tritium in the $Tnbs_0$ HSU exhibits a pattern that is consistent with two coalescing plumes, one emanating from sources in and beneath Pit 3 and a lower activity plume emanating from sources within and beneath Pit 5 (Figure 8). Tritium sources still exist in the pits and unsaturated bedrock. These residual sources release tritium to shallow

ground water during heavy, El Niño-type rainfall events. However, their impact is fairly limited in both space and time. The historical maximum tritium activity of 2,660,000 picocuries per liter (pCi/L) was detected in a Qal/WBR HSU ground water sample following the 1998 El Niño event. However, tritium activities have decreased significantly following this event, with a maximum activity of 328,000 pCi/L detected in $Tnbs_0$ HSU ground water in December 2006.

Since the 1998 El Niño, and specifically for the period between 2000 and 2006, the length of the tritium plume exceeding the 20,000 pCi/L Maximum Contaminant Level (MCL) in both the Qal/WBR and $Tnbs_0$ HSUs has declined to 800 and 1,250 ft, respectively (Figures 7 and 8). In 2006, tritium above background activities (>100 pCi/L) extended 2,200 and 3,000 ft from the landfills in the two HSUs, respectively. The Pit 7 tritium plumes in the Qal/WBR and $Tnbs_0$ HSUs have commingled with the tritium plumes emanating from the Building 850 area. However, ground water data collected in the area where these plumes merge indicate that the tritium plumes from the Pit 7 Complex are not contributing significant mass to the Building 850 tritium plumes.

Modeling of tritium migration along conservative shortest distance paths to the Site 300 boundaries in both HSUs indicates that, even without source isolation, tritium activities offsite should never exceed background activities (100 pCi/L).

Analytical data from ground water samples collected in the Pit 7 Complex area since the mid-1990s indicate that both depleted and natural uranium are present. The nature and extent of both depleted and natural uranium in ground water in the Pit 7 Complex area were evaluated using uranium-235/uranium-238 ($^{235}U/^{238}U$) atom ratio data. Depleted and natural uranium in ground water are differentiated using mass spectrometry to determine the mass ratio of $^{235}U/^{238}U$ isotopes. A $^{235}U/^{238}U$ atom ratio less than 0.007 indicates the presence of depleted uranium and a $^{235}U/^{238}U$ atom ratio approximately equal to 0.007 indicates that only natural uranium is present. Similar to tritium, releases of depleted uranium and rises in total uranium activity correlate with abnormally high rainfall and resulting water table rises into the pits and underlying bedrock. During and following years of normal rainfall and lower water levels, the total uranium activity and depleted uranium percentage in ground water generally decrease. The extent of total uranium activities in the Qal/WBR and $Tnbs_0$ HSUs exceeding the 20 pCi/L Maximum Contaminant Level (MCL) is contoured in orange on Figures 9 and 10. Atom ratio data for wells that yielded ground water samples containing some depleted uranium, i.e., were less than 0.007, are shown in bold text. Atom ratio data for wells where ground water samples contained only natural uranium are shown in plain text on these figures. The total uranium activity posted for these wells is due solely to natural uranium. Ground water samples from wells screened in the $Tnbs_0$ HSU (Figure 10) have generally not shown depleted uranium atom ratios, indicating that depleted uranium has not migrated downward into the $Tnbs_0$ HSU. In 2006, the extent of total uranium in ground water that exceeded the 20 pCi/L MCL was limited to about 700 and 300 ft from the landfills in the Qal/WBR and $Tnbs_0$ HSUs, respectively. The maximum total uranium activity detected in Pit 7 ground water in 2006 was 150 pCi/L in a sample from a well screened in the Qal/WBR HSU. Fate and transport modeling of uranium migration along conservative shortest distance paths to the Site 300 boundaries indicates that, even without remediation, uranium activities in the Qal/WBR and $Tnbs_0$ HSUs should fall below the 20 pCi/L MCL well within the Site 300 boundaries, at distances of 400 ft and 1,000 ft, respectively.

Figures 11 and 12 show the distribution of perchlorate in Qal/WBR and $Tnbs_0$ HSU ground water, respectively. Perchlorate has been detected above the 6 micrograms per liter (μg/L) State

MCL in samples collected from wells completed in the Qal/WBR and $Tnbs_0$ HSUs. In 2006, the lateral extent of perchlorate at concentrations exceeding the MCL extended about 800 and 400 ft from the landfills in the Qal/WBR and $Tnbs_0$ HSUs, respectively. Additionally, ground water samples in one $Tnbs_0$ well located about 1,900 ft from the landfills also contain perchlorate at concentrations slightly exceeding the MCL (Figure 12). The maximum historic perchlorate concentration detected in ground water in the Pit 7 Complex area was 23 μg/L. The maximum perchlorate concentration detected in Pit 7 ground water in 2006 was 14 μg/L (Figure 10). A maximum perchlorate concentration of 16 mg/L was detected in a first semester 2007 ground water sample from one of the recently installed Qal/WBR HSU extraction wells (Figure 11). Based on the spatial distribution of the perchlorate in ground water, it is likely that both Pits 3 and 5 contain low-level perchlorate sources.

Although elevated nitrate has been detected in ground water from the Pit 7 Complex area, the spatial distribution of nitrate indicates that the landfill pits are not the only source (Figures 13 and 14). In fact, ground water samples from some wells located west and upgradient of the landfills contain appreciable concentrations of nitrate (10 to 30 milligrams per liter [mg/L]). Elevated nitrate concentrations in Qal/WBR HSU ground water (Figure 13) in the immediate vicinity of the pits indicate that residual nitrate sources may still exist within the pit waste. The nitrate released to ground water from the landfills appears to be restricted to the Qal/WBR HSU. Some nitrate detected in Qal/WBR ground water may also result from dissolution of naturally-occurring nitrate from the alluvium and weathered bedrock derived from the Neroly Formation. Therefore, within the Qal/WBR HSU, historic concentrations of nitrate in excess of the 45 mg/L MCL may be attributable to a combination of anthropogenic and natural sources. Only one well proximal to the Pit 7 Complex landfills, and which is screened in both the Qal/WBR and $Tnbs_0$ HSUs, yielded a ground water sample during 2006 that contained nitrate at or above the 45 mg/L MCL (Figures 13 and 14). The presence of higher concentrations of nitrate in far downgradient $Tnbs_0$ HSU ground water (Figure 14) can be explained by the interaction of ground water with a nitrate-bearing rock matrix and increasing residence time along the flow path. The maximum nitrate concentration detected at Pit 7 in 2006 was 71 mg/L in a sample from a well located 1,500 ft northeast of the landfills.

Monitoring for VOCs in ground water began at the Pit 7 Complex in the mid-1980s. The most commonly detected VOC is trichloroethylene (TCE). Other VOCs include 1,1-dichloroethylene (DCE), toluene, total xylene isomers, and perchloroethylene (PCE). The maximum historical TCE concentration (15 μg/L) was detected in a ground water sample collected in 1995. Currently, TCE is not detected in ground water samples from wells in the Pit 7 Complex area at concentrations above its 5 μg/L MCL. Based on historical data, it appears that Pit 5 is the likely source of TCE. However, given the decreasing TCE trend to concentrations below the MCL, and the absence of any significant increase in TCE following the 1998 El Niño, it is likely that any remaining VOC sources, if present, are depleted. In 2006, the only VOCs detected in Pit 7 Complex ground water were TCE and 1,1-DCE at maximum concentrations of 3 and 1 μg/L, respectively. The samples containing these VOCs were collected from a well located 50 ft from Pit 5. Maximum first semester 2007 concentrations of TCE and 1,1-DCE were 5 and 3.2 μg/L, respectively, and were collected from new extraction well W-PIT7-2305. The distribution of total VOCs in Pit 7 Complex ground water is shown on Figures 15 and 16. The current distribution of VOCs is limited to five monitoring wells in the immediate vicinity of the landfills (K7-01, K7-03, NC7-37, NC7-22 and W-Pit7-12) and

two new extraction wells (W-PIT7-2305 and W-PIT7-2306), and VOC concentrations are at or below their drinking water MCLs and continuing to decrease.

3.3. Nature and Extent of Contamination in Surface Water

As discussed in Section 2.2.1, the closest surface water body to the Pit 7 Complex in the direction of bedrock ground water flow is Spring 24, located in the next valley approximately 2,500 ft from the Pit 7 Complex (Figure 3). Because surface water at Spring 24 is addressed as part of the remedy for the Building 850 area, a discussion of surface water in Spring 24 is not included in this RD.

4. Summary of Human Health and Ecological Risks

4.1. Human Health and Exposure Assessment

Baseline human health risks and hazards for the Pit 7 Complex were estimated in the RI/FS for the Pit 7 Complex using industrial adult onsite exposure and offsite residential exposure scenarios. The adult onsite exposure scenario estimates health risk where an adult is assumed to work in the immediate vicinity of worst-case contamination 8 hours a day, 5 days per week, for 25 years. This exposure scenario further assumes that workers will not dig into the pits; digging will be prevented through institutional/land use controls. Risks due to potential ingestion of contaminated ground water were not evaluated because ground water is not currently used as drinking water and institutional controls will prohibit such use during cleanup. DOE and the regulators have agreed that ground water cleanup will be driven by applicable or relevant and appropriate requirements (ARARs), not risk.

The results of the baseline risk assessment conducted in 1992 indicated that the only unacceptable risk to human health posed by contaminants in the Pit 7 Complex area was inhalation of tritiated water vapor evaporating from subsurface soil by onsite workers in the vicinity of the Pit 3 Landfill. This risk was estimated to be 4×10^{-6} (four in one million) and was calculated based on the assumption that a worker spends 8 hours a day, 5 days a week for 25 years at Pit 3. However, only periodic monitoring activities are conducted at the landfills and no workers actually spend this amount of time in the area. There was no unacceptable risk identified for offsite residents.

However, radioactive decay continues to reduce the mass of tritium in subsurface soil at the Pit 3 Landfill, thereby reducing the flux of tritium vapors to air. Therefore, the risk to onsite workers for potential inhalation of tritium vapors from the Pit 3 Landfill, accounting for tritium decay that occurred between 1992 and 2007, was evaluated for the remedial design. A risk of 7.8×10^{-7} (less than 8 in ten million) was estimated for a worker spending 8 hours a day, 5 days a week for 25 years at the Pit 3 Landfill. Therefore, there is no longer an unacceptable risk to human health posed by contaminants in the Pit 7 Complex area under an industrial land use scenario with prohibitions on digging into the pits.

4.2. Ecological Assessment

The results of the baseline ecological assessment discussed in the RI/FS for the Pit 7 Complex indicate there were no unacceptable hazards identified for plants and animals residing

in this area. This determination was based on estimates of hazard from potential exposure to contaminants that were calculated for mammals, amphibians, and birds that could potentially inhabit this area, including threatened and endangered species.

5. Remedial Design

This section presents the remedial strategy and design for the Pit 7 Complex. Section 5.1 discusses the overall remedial strategy for the Pit 7 Complex. The remedial design includes the following major components:

- Risk and hazard management, including institutional/land use controls (Section 5.2).
- Monitored natural attenuation of tritium in subsurface soil/rock and ground water (Section 5.3).
- Source control using hydraulic drainage diversion (Section 5.4).
- Extraction and treatment of uranium, perchlorate, nitrate, and VOCs in ground water (Section 5.5).

Performance and compliance monitoring of the remedy components are discussed in Section 5.2 through 5.5 and in the Remedial Action Work Plan Section 6.2. This section also includes a discussion of contingency planning (Section 5.6), the construction, startup, and document schedule (Section 5.7), and the cost estimates for the remedial design components (Section 5.8).

5.1. Remedial Strategy

The remedial strategy for the Pit 7 Complex is consistent with the objectives for source control and ground water cleanup presented in the Interim ROD Amendment.

The overall objective is to achieve closure under CERCLA of the Pit 7 Complex Remedial Action. The remedial strategy for cleanup is to:

- Prevent exposure to contaminants.
- Prevent further impacts of contaminants in the pits and underlying bedrock to ground water through source control measures.
- Reduce uranium, perchlorate, nitrate, and VOC concentrations in ground water to drinking water MCLs, at a minimum.
- Prevent plume migration to the extent technically and economically practicable.

This remedial strategy, which is based on hydrogeologic and engineering analysis, relies primarily on monitored natural attenuation and ground water extraction and treatment to remove dissolved contaminants from the ground water and an engineered drainage diversion system to isolate the contaminant sources in the landfills and underlying bedrock from subsurface water, thereby preventing infiltration of rainwater runoff that can result in ground water rising into Pits 3, 4, 5, and 7 and releasing contaminants. The planned treatment technologies are well-proven technologies for ground water cleanup, such as conventional aqueous-phase granular activated carbon (GAC) to remove VOCs and ion-exchange resins to remove uranium, nitrate, and perchlorate.

Excavation of the pit waste was not included as part of the cleanup plan because it would not be as effective in preventing further releases of contaminants as the drainage diversion system. Excavation of the pit waste would not prevent further contamination of ground water because a significant portion of the contaminants are already present in the bedrock underlying the pits and would still remain as a contaminant source after the waste was removed. Based on sampling and analysis of the pit waste, the distribution of tritium and uranium is fairly homogenous and there are no discernible contaminant "hot spots" that could be selectively removed. The U.S. EPA and State regulatory agencies agreed that a drainage diversion system would be more effective in preventing releases from the landfills and underlying bedrock.

This remedial strategy includes monitoring of ground water chemistry and water elevations to verify that:

- The drainage diversion system is effective in preventing further releases of COCs from the pits and underlying bedrock to ground water.
- Ground water extraction and treatment reduces uranium, nitrate, perchlorate, and VOCs concentrations in ground water to meet the cleanup standards that will be selected in the Site-Wide ROD.
- Natural attenuation reduces tritium activities in ground water to meet cleanup standards that will be selected in the Site-Wide ROD.

A Risk and Hazard Management Program, discussed in Section 5.2, that includes institutional/land use controls, is in place and will continue to prevent exposure to contaminants of concern (COCs) during and after ground water remediation. Institutional/land use controls will remain in place to prevent digging in the pit waste.

5.2. Risk and Hazard Management

As part of the selected remedy, risk and hazard management is prescribed for areas where risk at any exposure point exceeds 1×10^{-6} or the hazard index is greater than 1, exclusive of ingestion of contaminated ground water. Risk due to the potential ingestion of contaminated ground water was not calculated because: (1) ground water is not used as drinking water in the Pit 7 Complex area, and (2) DOE and the regulatory agencies have agreed that ground water cleanup will by driven by ARARs. The goals of the Risk and Hazard Management Program for the Pit 7 Complex are to control exposure to contaminants and to ensure the selected interim remedies for the Pit 7 Complex protect human health and the environment until cleanup is complete.

The 1992 baseline risk assessment indicated there was an unacceptable risk (4×10^{-6}) to onsite workers from potential inhalation of tritium evaporating from subsurface soil in the vicinity of the Pit 3 Landfill. An updated risk analysis conducted for the remedial design estimated a risk of 7.8×10^{-7} (less than 8 in ten million) that is in the range considered acceptable by the U.S. EPA. Therefore, risk management measures are not necessary to mitigate exposure to inhalation of tritium in air at the Pit 3 Landfill.

There is a potential for onsite workers to be exposed to contamination in the pit waste in the case of unintentional excavation into the pits. There is no risk to humans from exposure to contaminants in ground water because there are no onsite water-supply wells in the Pit 7 Complex area and ground water contaminants will not migrate and impact onsite or offsite

water-supply wells. However, concentrations of some contaminants in onsite ground water in this area exceed drinking water MCLs. There were no risks identified for offsite residential receptors. The institutional/land use controls that will be used to manage risk and prevent exposure as part of the risk and hazard management program are discussed in Section 5.2.1.

There were no unacceptable hazards to ecological receptors. However, ongoing measures that are taken to protect plant and animals at LLNL Site 300 are discussed in Section 5.2.2.

5.2.1. Institutional/Land Use Controls

Institutional/land use controls are non-engineered actions or measures used to prevent or limit the potential for human exposure to contamination at Site 300 and to protect the integrity of the remedy. The general types of institutional/land use controls that will be used to prevent human exposure to contamination at the Pit 7 Complex include:

- Access controls – Measures such as fences, signs, and security forces that are used to prevent exposure by controlling and/or restricting access to areas of contamination.
- Administrative controls – Measures such as pre-construction review and controls for limiting or restricting access to contaminated areas.

The specific institutional/land use controls for the Pit 7 Complex are described in Table 1 and shown on Figure 17.

Monitoring and/or inspection of the Pit 7 Complex remedy components will be performed throughout the remediation period to determine whether the institutional/land use controls remain protective and consistent with all remedial action objectives. In addition, DOE will review facility and land use to evaluate changes in exposure pathway conditions that could affect the risk assessment assumptions and calculations.

If DOE later transfers these procedural responsibilities to another party by contract, property transfer agreement, or through another means, DOE will retain ultimate responsibility for the integrity of the remedy. In the event that the property is transferred in the future, DOE will execute a land use covenant at the time of transfer in compliance with Title 22 California Code of Regulations (CCR), Division 4.5, Chapter 39, Section 67391.1. If the Site 300 property were to be transferred to an entity outside the U.S. Department of Energy, the necessary institutional/land use controls would be determined prior to the property transfer based on: (1) the intended land use subsequent to the property transfer (e.g., industrial versus residential), and (2) contamination and associated risk, if any, remaining at the Pit 7 Complex.

5.2.2. Ecological Hazard Controls

There was no unacceptable risk of exposure to contaminants in any media identified for ecological receptors in the vicinity of the Pit 7 Complex. In addition, there are currently no threatened, endangered, or species of special concern that may be potentially exposed to unacceptable levels of contaminants at the Pit 7 Complex. As a result, specific exposure control measures for ecological receptors are not needed. However, the current LLNL program of conducting ecological resource surveys prior to the initiation of any ground-disturbing activities, including actions that will occur as a result of the final remedial actions implemented at the Pit 7 Complex, will continue to ensure that sensitive species are not negatively impacted by any planned ground-disturbing activities.

As currently implemented, any area proposed for an activity that may cause significant surface disturbance (e.g., well installation or facility construction) must be surveyed by a wildlife biologist for the presence of sensitive species. If sensitive species are found, then mitigation measures as defined in the Environmental Impact Statement/Environmental Impact Report for continued operation of LLNL (DOE, 2005) would be implemented.

In addition, biologists will continue to monitor the Pit 7 Complex area for the presence of sensitive species not previously identified there. The life history of these species will be reviewed to determine the potential for unacceptable exposure to contaminants at the site. Should it be determined that these species do have a potential risk of significant exposure, their presence in areas where hazard indices exceed 1 will be determined. Finally, environmental contamination data will continue to be evaluated to ensure that site conditions do not change to such an extent as to threaten any wildlife populations or plant communities.

5.3. Monitored Natural Attenuation of Tritium in Ground Water

Monitored natural attenuation is the remedy component selected for tritium in ground water at the Pit 7 Complex in the Interim Site-Wide ROD Amendment. The tritium plume at the Pit 7 Complex meets EPA's monitored natural attenuation criteria because:

1. No unacceptable risk to human health or the environment was identified for this plume.
2. Fate and transport modeling indicates that, even without source control measures, tritium in ground water will naturally attenuate to drinking water standards or lower within a reasonable timeframe without migrating offsite above background activities. Modeling results indicate that tritium activities in the Qal/WBR and $Tnbs_0$ HSUs should attenuate to below the 20,000 pCi/L MCL in 30 to 40 and 35 years, respectively (Taffet et al., 2005).
3. Source control measures will be implemented, as described in Section 5.6.
4. The lateral extent of the tritium plume with activities above drinking water MCLs is static or retreating and once source control measures are implemented, natural attenuation should reduce the extent of the tritium plume contours above background activities.

As part of the remedy, performance monitoring will be conducted to evaluate the effectiveness of natural attenuation in reducing tritium to meet cleanup standards and to ensure protection of human health and the environment. This compliance monitoring will be conducted within and downgradient of the tritium plume.

In accordance with EPA guidance (EPA, 1999), performance monitoring of the natural attenuation of the tritium plume will be conducted in order to:

- Demonstrate that natural attenuation is occurring at a rate meeting expectations.
- Determine if the tritium plume is expanding either laterally, vertically, or downgradient.
- Ensure no impact to downgradient receptors.
- Detect new tritium releases to the environment that could alter the effectiveness of the monitored natural attenuation remedy.
- Detect changes in hydrogeologic conditions that could reduce the effectiveness of the natural attenuation process.
- Verify attainment of cleanup standards.

Ground water samples for tritium analysis will be collected regularly from monitor wells in the Pit 7 Complex. The analytical results will be used to: (1) verify that the drainage diversion system is effective in controlling the tritium source, (2) detect new releases of tritium to ground water that could alter the effectiveness of the monitored natural attenuation remedy, (3) verify that natural attenuation continues to decrease tritium activities in ground water to meet cleanup standards, and (4) detect any changes in the lateral and vertical extent of the tritium plume. Because tritium decays to non-toxic, non-radioactive helium-3, monitoring for toxic decay products is not necessary.

Ground water analytical data and ground water level measurements from all the Pit 7 Complex wells will be used to detect changes in hydrogeologic conditions that could affect any of the monitored natural attenuation criteria and to verify attainment of cleanup standards. Additional monitor wells may be installed if needed to adequately monitor the tritium plume and the effectiveness of the monitored natural attenuation remedy.

Monitoring will be conducted in accordance with the sampling plan contained in Table B-3 (Appendix B) until the revised Site-Wide Compliance Monitoring Plan is completed in 2009. At that time, the sampling requirements in the revised Site-Wide Compliance Monitoring Plan will supercede the sampling plan contained in Appendix B.

The Site 300 Contingency Plan will be modified to include actions that may be implemented in the event that monitored natural attenuation of tritium in ground water does not achieve remedial action objectives or comply with ARARs. If such a situation arose, DOE/LLNL would discuss possible remedy changes with the regulatory agencies. Any significant or major remedy changes would be documented in an Explanation of Significant Differences or a ROD amendment.

Monitoring will continue until tritium activities reach the cleanup standards and for 2 years after cleanup standards are attained to verify that a rebound of tritium does not occur. The requirements for completion of ground water cleanup are discussed in Section 6.5. Cleanup standards will be included in the Final ROD for LLNL Site 300, scheduled for completion in 2008.

The performance standards that shall be met to confirm the effectiveness of the monitored natural attenuation remedy for tritium in ground water at the Pit 7 Complex are that: (1) source control measures have been implemented and the data indicate that the landfill sources are no longer releasing tritium to ground water, and (2) tritium concentrations in ground water have decreased to below the 20,000 pCi/L drinking water MCL cleanup standard. Monitoring data will be collected and the performance of the monitored natural attenuation remedy will be reviewed and reported in the semiannual Site-Wide Compliance Monitoring Reports.

It is important to note that:

- There is no effective treatment technology to remove tritium from ground water.
- The natural attenuation of tritium in ground water will reduce tritium activities to background levels. The plume will not migrate offsite during this time period.
- Hydraulic re-circulation of tritium in ground water was evaluated by DOE, EPA, and the state regulatory agencies as a potential means of preventing further tritium plume migration. The evaluation results indicated that hydraulic recirculation was not

technically feasible as it would cause landfill inundation, increase contaminant releases from the landfills, and cause plume migration into clean ground water.

5.4. Ground Water Extraction and Treatment

Ground water in the vicinity of the Pit 7 Complex will be extracted and treated to remove uranium, perchlorate, nitrate, and VOCs. The design of the extraction wellfield, *ex situ* ground water treatment system, and the facility effluent discharge method are discussed in Section 5.4.1, 5.4.2, and 5.4.3, respectively. The expected performance of the ground water extraction and treatment system is discussed in Section 5.4.4. Controls and safeguards for the extraction and treatment system are discussed in Section 5.4.5.

5.4.1. Extraction Wellfield Design

This section describes the design of the ground water extraction wellfield that will be used to pump uranium-, perchlorate-, nitrate-, and VOC-contaminated ground water in the Pit 7 Complex area from the subsurface. The analysis conducted to design the extraction wellfield was based on hydraulic testing summarized in Section 5.4.1.1 and the capture zone modeling summarized in Section 5.4.1.2. Section 5.4.1.3 describes the extraction well configuration that will be used for ground water cleanup. The estimate of the time to achieve ground water cleanup using this extraction wellfield design is presented in Section 5.4.1.4.

5.4.1.1. Hydraulic Testing

Short-duration pumping tests were conducted on the seven extraction wells: NC7-25, NC7-63, NC7-64, W-PIT7-1918, W-PIT7-2305, W-PIT7-2306, and W-PIT7-2307. These tests generally indicated low sustainable pumping rates of less than 0.1 gallons per minute (gpm). A maximum sustainable pumping rate of 0.75 gpm was observed in well W-PIT7-2307. Because these tests were conducted recently, during a period of low-to-average saturated thickness of the Qal/WBR HSU, sustainable yield for wells completed in the Qal/WBR HSU may be higher following periods of winter rainfall when the saturated thickness and extent of saturation may expand. Hydraulic test results are tabulated in Table 2.

5.4.1.2. Ground water Capture Zone Analysis

WinFlow (Rumbaugh, 1996), an interactive, analytical model that simulates two-dimensional steady-state and transient ground water flow, was used to evaluate the capture zones of the extraction wells. WinFlow simulates ground water flow in a horizontal plane using analytical functions and uses the principle of superposition to evaluate the effects from multiple extraction wells in a uniform regional flow field. The model depicts the flow field using streamlines, particle traces, and contours of hydraulic head. The particle-tracking techniques are implemented numerically to compute travel times and flow directions.

WinFlow requires regional gradient and direction of flow, hydraulic conductivity, aquifer top and bottom elevation, and a reference head as basic input. Regional gradient and direction of flow are used to superimpose a uniform ground water flow field on the analytical model. Hydraulic conductivity is assumed to be homogeneous throughout the infinite aquifer. The aquifer top and bottom elevations are constant throughout the model, however, the transmissivity is computed based on saturated thickness for each analytical element.

A two-step modeling approach was used to evaluate the capture zones of the extraction wellfield for the Qal/WBR and $Tnbs_0$ HSUs in the Pit 7 Complex area. The first step was to develop a model that simulates current conditions in each HSU and calibrate the model to measured ground water elevations and observed drawdown in existing wells. In the second step, the proposed extraction wellfield was modeled with initial estimates of flow rate for each well.

Using the above approach, two separate models were developed for capture zone analysis for each of the Qal/WBR HSU and the $Tnbs_0$ HSU. The WinFlow model input parameters are listed in Table 3 and the extraction flow rate estimates for the proposed extraction wellfield are listed in Table 4. The gradient and ground water flow direction were calculated for each model using the measured ground water elevations from monitoring wells in each model domain. The aquifer thickness was obtained by averaging the thickness of the HSU observed in each well. The hydraulic conductivity values were calibrated for each model and they are within the observed values reported based on hydraulic testing data analysis (Table 2).

The expected capture zones for the Qal/WBR and $Tnbs_0$ HSU extraction wells are shown in Figures 18 and 19, respectively. The capture zones shown in the figures are conservative (i.e., minimum capture) because: (1) the basic parameters used for each model were selected to be conservative (i.e., minimum aquifer thickness and hydraulic conductivity, or maximum gradient values), and (2) the capture zone analysis conservatively assumes a constant long-term supply of recharge water. However, the drainage diversion system is designed to limit recharge to the Qal/WBR and $Tnbs_0$ HSUs. Due to this conservative approach, the actual capture zone from each extraction well is expected to be larger than the capture zones depicted in Figures 18 and 19 for the Qal/WBR and $Tnbs_0$ HSUs, respectively.

Once the extraction wellfield and drainage diversion system are fully operational, ground water elevation measurements, concentration trends in ground water samples from performance monitoring wells, and changes in plume distribution will be used to evaluate their effectiveness in meeting remedial design objectives. Details of performance monitoring are discussed in Section 5.4.4 of this report. If data indicate that uranium, perchlorate, nitrate, and VOC plumes are not being successfully contained, actions that may be taken, including adjusting extraction wellfield flow rates and/or expanding the extraction wellfield. Contingency actions will be discussed in the revised Compliance Monitoring Plan/Contingency Plan.

5.4.1.3. Extraction Wellfield Configuration

The extraction wellfield design includes five Qal/WBR HSU extraction wells (NC7-63, NC7-64, W-PIT7-1918, W-PIT7-2306, and W-PIT7-2307), one $Tnbs_0$ extraction well (NC7-25), and one extraction well completed in both HSUs (W-PIT7-2305). Extraction well locations are shown on Figures 18 and 19 and well-specific information, such as HSU completion, yield, and the most recent contaminant concentrations in ground water are summarized in Table 4. Of these seven extraction wells, three wells (W-PIT7-2305, -2306, and -2307) were recently installed. These new extraction wells are located near ground water monitor wells with long-standing monitoring histories that record significant responses to rainfall events and past releases of contaminants from the landfills. In addition, four existing monitor wells, W-PIT7-1918, NC7-25, NC7-63, and NC7-64 are being converted to extraction wells. This wellfield is designed to capture and reduce the highest concentrations of uranium, perchlorate, nitrate, and VOCs immediately downgradient of the Pit 7 Complex source areas. Figures 9 through 16 show that the wells within the extraction wellfield are generally located within the regions of the

highest concentrations of uranium, nitrate, perchlorate, and VOCs in ground water near the Pit 7 Complex landfill source areas. Figures 18 and 19 illustrate how the wellfield configuration was designed to target the highest depleted uranium concentrations in the Qal/WBR HSU and capture uranium, perchlorate, and VOCs in excess of drinking water standards in both the Qal/WBR and Neroly bedrock HSUs. Currently, nitrate concentrations proximal to the landfills are below MCLs. However, nitrate will be removed from extracted ground water as part of the treatment process.

$Tnbs_0$ HSU well NC7-25 would only be pumped when ground water elevations in overlying Qal/WBR HSU are sufficiently low to avoid pulling depleted uranium and other contaminants in the Qal/WBR HSU into the $Tnbs_0$ HSU.

The sustainable flow rate from each of the proposed extraction wells, based on current conditions, is generally less than 0.1 gpm. However, the ground water treatment system and infiltration trench for the discharge of treated ground water were designed for higher flow rates, in the event that flow rates are higher following periods of ground water recharge and greater saturated thicknesses of the HSUs. The drainage diversion system, designed to reduce ground water recharge in the Pit 7 Complex area, may reduce the yield from these extraction wells following periods of heavy rainfall. Therefore, after the drainage diversion system and extraction and treatment system have been operating for a period of time, it may be necessary to modify the extraction well configuration, pumping strategy, and/or install additional extraction wells to optimize contaminant removal. Any necessary changes will be conducted in consultation with the regulatory agencies. The operational effectiveness of the extraction wellfield will be monitored over time to assess the potential impacts of the drainage diversion system and to optimize operations of the ground water extraction and treatment system. This monitoring will include collecting and analyzing water level data and uranium, perchlorate, nitrate, and VOC concentrations and distribution in ground water. Ongoing evaluation, optimization, and management of the extraction wellfield will be conducted to ensure the success of the ground water remediation effort. Specifically, COC trends and distribution in ground water will be compared with ground water capture zones and current sustainable extraction well yields on an annual basis to optimize contaminant capture and mass removal. Ground water extraction and the extraction wellfield configuration will be managed such that, where possible, the well capture zones include the areas with the highest COC concentrations to maximize the volume of COC mass that can be removed. This evaluation and optimization process will include analysis of saturated thickness, water elevation and precipitation hydrographs, COC distribution and capture zones, and potentiometric surface maps. The results of these evaluations will be included in the Pit 7 section of the semi-annual Compliance Monitoring Reports. Any major proposed changes to the extraction wellfield configuration will be presented to the regulatory agencies at RPM meetings for discussion and concurrence.

Ground water extraction and treatment will be conducted using a phased approach because the drainage diversion system will affect the local hydrologic conditions by reducing ground water recharge in the vicinity of the Pit 7 Complex. As a result, the extent of saturation and volume of ground water available for pumping will likely be reduced in the area of ground water extraction. However, it will be very difficult to predict in advance the magnitude and location of impact that the drainage diversion system will have on water levels in the vicinity of the pits. Once the effects of the drainage diversion system on hydrologic conditions have been determined through performance monitoring and are found to be stable, the capture zones for the

extraction wells will be evaluated. Any necessary changes to the extraction well configuration and pumping strategy, and/or the installation of additional extraction wells to optimize contaminant removal will be evaluated and discussed with the regulatory agencies.

5.4.1.4. Ground Water Cleanup Time Estimate

The time to clean up uranium in Qal/WBR and $Tnbs_0$ HSU ground water at the Pit 7 Complex was estimated using a mixed-tank model that was developed in conjunction with the capture zones resulting from the WinFlow model discussed in Section 5.4.1.2. Uranium was used to estimate cleanup time for the Pit 7 Complex ground water because of its recalcitrant nature (high retardation and long half-life) that will drive the length of time to achieve cleanup standards.

In a mixed-tank model, the subsurface is assumed to be homogenous and each HSU is treated as a "mixed tank." For example, any COC input to the HSU is assumed to be instantaneously mixed throughout the entire volume of ground water in that HSU, and ground water extraction is assumed to impact all parts of the contaminant plume equally. The COC concentration in the mixed-tank represents the average contaminant concentration within the capture zone of all extraction wells.

In the idealized mixed-tank approach, the plume is assumed to contain two reservoirs of contaminant mass: (1) the contaminants dissolved in ground water, and (2) contaminants adsorbed to saturated soil. Additional sources of contaminants from the vadose zone are assumed to be negligible, and as ground water is extracted from the plume, clean ground water is assumed to flow inward from the plume margins. This clean ground water comes in contact with soil containing sorbed contaminants and a new concentration equilibrium is established. The equilibrium between ground water and COCs sorbed to saturated soil is accounted for using a retardation coefficient.

Parameters used in the mixed-tank model are listed in Table 3. To estimate clean up durations, mixed tank models were developed for the same areas as the WinFlow models. The volume of contaminated ground water was estimated using isoconcentration maps and the geologic structure of each HSU. The extraction flow rates were obtained from the results of the WinFlow capture zone analysis, and the average initial uranium activity was obtained by averaging the current activities in the extraction wells (Table 4).

The time to achieve the 20 pCi/L MCL activity for uranium in the Qal/WBR HSU ranges from 30 to 90 years. The time to achieve the 20 pCi/L MCL activity for uranium in the $Tnbs_0$ HSU ranges from 20 years and 30 years. The reason that cleanup times are given as a range is because of the uncertainty associated with the effects of the drainage diversion system on the extraction well yields. For example, the 30-year cleanup time for the Qal/WBR HSU assumes higher extraction well yields and larger capture zones. The 90-year cleanup time for the Qal/WBR HSU assumes very low well yield and small capture zones. In addition, mixed-tank models have a high degree of uncertainty because of the idealization of the conceptual model and the difficulty in calculating accurate average values for the idealized parameters. However, as discussed in Section 5.4.1.3, the extraction well yields and capture zones be evaluated once the effects of the drainage diversion system on hydrologic conditions have been determined through performance monitoring and are found to be stable. Any necessary changes to the extraction well configuration and pumping strategy, and/or the installation of additional extraction wells to optimize contaminant removal will be evaluated and discussed with the regulatory agencies.

5.4.2. Treatment System Design and Specifications

The ground water treatment system was designed to remove uranium, VOCs, nitrate, and perchlorate from extracted ground water to meet effluent discharge limits consistent with Substantive Requirements for water discharge issued by the RWQCB presented in Appendix B. The location of the treatment system is shown in Figure 20. Relevant engineering data for the treatment system, including flow rates and influent concentrations, are summarized in Table 5. Piping and instrumentation diagrams for the ground water extraction and treatment system are presented in Figures 21A and 21B.

Extracted ground water will be filtered using a five-micron filtration system to remove suspended particles prior to entering the treatment media. The influent water will then be piped to three aqueous-phase 200-pound (lb) GAC canisters to remove VOCs. The second and third GAC canisters are safeguards against breakthrough of VOCs. When VOCs are detected between the second and third GAC canister at concentrations above the effluent discharge limits, the GAC in the first canister is replaced with new, clean GAC and the first GAC canister is placed in the third position. The remaining partially saturated GAC canisters move up in position to optimize GAC usage (e.g., the third GAC canister moves to the second position and the second GAC canister moves to the first position).

The water between the first and second, and second and third GAC canisters will be monitored for VOC breakthrough. Following treatment for VOC removal, ground water will flow to three ion-exchange resin canisters. Each ion-exchange canister will be filled with approximately 2.5 cubic feet of US Filter/Siemens type USF A-284 strong base anion (SBA) ion-exchange resin, an ion-exchange resin that is effective in removing uranium. The water between these ion-exchange canisters will be monitored for uranium breakthrough. Because this is the first Remedial Design to include uranium treatment, additional information about the SBA ion-exchange resin is provided in Appendix C. Ground water that has been treated to remove VOCs and uranium will then flow to three ion-exchange resin canisters connected in series to remove perchlorate and nitrate prior to discharge. Each ion-exchange canister will be filled with approximately 2.5 cubic feet of Sybron SR-7™, a nitrate-selective ion-exchange resin that is also effective in removing perchlorate. Perchlorate loading on the resin is expected to be low because of the low influent concentrations (<20 μg/L). As with the GAC and uranium ion-exchange resins, the water between the nitrate and perchlorate, the ion-exchange canisters will be monitored for perchlorate and nitrate breakthrough.

Following treatment to remove VOC, uranium, nitrate and perchlorate, the treatment facility effluent will be monitored for compliance with effluent discharge limits (Appendix B). Treated water that meets the effluent discharge limits for VOCs, uranium, nitrate, and perchlorate will be discharged to the infiltration trench described in Section 5.5.3.

If the spent GAC and ion-exchange resins are characterized as mixed waste, it will be removed for offsite disposal at an appropriate permitted facility. If the spent treatment media is characterized as low-level radiological waste, they will be removed for offsite disposal at the Nevada Test Site.

5.4.3. Discharge of Treated Ground Water

The results of hydraulic testing of proposed reinjection wells W-PIT7-2308 and W-PIT7-2309 conducted in early 2007 indicated that reinjection of treated ground water into

wells was not a viable effluent discharge option due to the low hydraulic conductivity and storativity of the rocks in the Pit 7 Complex area. Therefore, treated water from the Pit 7 ground water treatment system will be discharged into an engineered infiltration trench that introduces the treated ground water into the unsaturated part of the shallow Qal/WBR HSU without causing accumulation of water near the ground surface. The trench will be constructed in the alluvial sediments southeast of the landfills (Figure 20). The trench will be designed for an anticipated maximum flow rate of 3.1 gpm. An aboveground pipeline will connect the treatment facility to the infiltration trench. The trench will be 80 ft long, 3 ft wide, and 10 ft deep, depending on the thickness of the Qal/WBR encountered during trench excavation. The base of the trench will likely be inclined to the northwest because the Qal/WBR thickens in that direction in the area. A horizontal pipe with 0.5-in diameter holes every 2 inches that extends the entire length of the trench will convey water into the trench. The trench will be backfilled with a 7 ft thickness of drain rock. A layer of high-density polyethylene (HDPE) will be placed above the drain rock to prevent overlying native fill soil from entering the drain rock. Although calculated risk from evaporation of infiltrating water containing tritium activities up to 100,000 pCi/L is less than 1 in a billion (1×10^9), the HDPE layer will also reduce the potential for tritium-bearing water vapor to evaporate to ambient air at ground surface. In addition, the HDPE layer will prevent surface runoff from entering the infiltration trench. Two piezometers (W-PIT7-2419 and W-PIT7-2420) will be installed, one at the lowest elevation of the base of the trench and one midway along the length of and at the bottom of the trench. These piezometers will be used to monitor water levels within the trench to assure that overfilling of the trench does not occur that could create an upward water pressure resulting in a potential breach in the integrity of the HDPE membrane. Dedicated pressure transducers will be placed within the two piezometers to record water elevation measurements at 15 minute to 6 hour intervals, depending on the rate of water level change. The upper 3 feet of the trench above the HDPE layer will be backfilled with compacted native soil to grade. The infiltration trench will require minimal maintenance. If infiltration rates are found to decrease, compacted soil, HDPE, and the filter fabric would be removed. The drain rock would be cleaned of silt and any mineralization and the trench materials would be reinstalled.

Because there are no viable treatment technologies to remove tritium from ground water, the treatment system effluent that is discharged to the infiltration trench will contain tritium at estimated maximum activities of about 80,000 to 90,000 pCi/L. As mentioned previously, there is no unacceptable risk to onsite workers posed by the evaporation of tritium-bearing water vapor from the trench to ambient air. Additionally, the infiltration trench design includes a layer of impermeable HDPE to further reduce potential exposure of workers to tritium vapors.

Current tritium activities in the Qal/WBR and $Tnbs_0$ HSU ground water adjacent to the infiltration trench are on the order of 50,000 to 90,000 pCi/L. Therefore, tritium activities in the water discharged to the infiltration trench are similar to tritium activities in the underlying ground water. In addition, the discharge rate to the infiltration trench will be relatively low, ranging from less than 2 gpm in the dry season to 3 gpm in the wet season. Once the drainage diversion system is in place and operational, it is anticipated that that tritium activities in water discharged to the trench will be lower during the wet season. As a result, it is not expected that the effluent discharge to the trench will have a negative impact on the distribution of tritium in the Qal/WBR HSU downgradient of the infiltration trench. As a precaution, monthly effluent samples will be analyzed for tritium, and water elevation and tritium activity trends in ground

water samples from monitoring wells NC7-16 and NC7-22, located immediately downgradient of the infiltration trench, will be evaluated to ensure that the discharge of tritiated water does not adversely impact hydrologic conditions and contaminant distribution in ground water. In addition, ground water extraction from the wellfield will be managed to prevent impacts from reinjection of tritiated water.

5.4.4. Performance Standards and Monitoring for the Ground Water Extraction and Treatment System

Effluent discharge limits for treated ground water discharged from treatment facilities at Site 300 are currently being discussed by DOE, EPA, DTSC, and RWQCB and will be selected in the final Site-Wide ROD scheduled for completion in 2008. Until these effluent discharge limits are selected, ground water will be treated to meet the effluent discharge limits for VOCs, uranium, nitrate, and perchlorate contained in the Substantive Requirements for wastewater discharge at the Pit 7 Complex issued by the RWQCB and summarized in Table B-1 in Appendix B. These current effluent discharge limits are sufficiently low to protect human health and the environment in the interim. Once the effluent discharge limits are selected in the final Site-Wide ROD, those discharge limits will supercede the interim discharge limits contained in Table B-1 in Appendix B of this remedial design document. The treatment facility would be retrofitted as necessary to comply with the agreed-upon effluent discharge limits. These discharge limits will be included in the revised Site-Wide Compliance Monitoring Plan scheduled for 2009.

Monitoring of influent and effluent concentrations will be conducted as presented in Table B-2 of Appendix B to ensure compliance with the effluent discharge limits contained in Table B-1. Facility influent and effluent sample port locations for the Pit 7 Complex ground water treatment system are identified in the piping and instrumentation diagrams (P&IDs) (Figure 21A). System performance will also be monitored and optimized, as needed, to maximize mass removal and/or prevent migration of uranium, perchlorate, nitrate, and VOCs. Samples from monitor wells within and downgradient of contaminant plumes in the Pit 7 Complex area will also be collected and analyzed to assess the effectiveness of the extraction and treatment system in reducing uranium, perchlorate, nitrate, and VOC concentrations and overall extent in ground water, as described in Table B-3 in Appendix B.

If monitoring and evaluation of the ground water extraction and treatment system indicate that the current design is not effective in reducing uranium, perchlorate, nitrate, and VOC concentrations to meet ground water cleanup standards for these COCs, DOE/LLNL will discuss corrective measures with the regulatory agencies. The Site 300 Contingency Plan will be modified to include actions that may be implemented in the event that the ground water extraction and treatment system does not reduce COC concentrations in ground water. If such a situation arose, DOE/LLNL would discuss possible remedy changes with the regulatory agencies. Any significant or major remedy changes would be documented in an Explanation of Significant Differences or a ROD amendment.

5.4.5. Controls and Safeguards

The Pit 7 ground water extraction and treatment facility is designed to be fail-safe. The failure of key components will cause the system to shut down safely. Following a shutdown, the

treatment facility operator will identify and correct the problem that caused the shutdown before restarting the facility.

System shutdown, which involves the de-energizing of extraction and transfer pumps, may be initiated by high water level fail-safe mechanisms in the transfer tank. Two redundant fail safe mechanisms in the transfer tank include a float valve that shuts off influent flow into the facility, and a high-high switch that would cut power to the air compressor and therefore stop well water pumping. Passive fail-safe design features include an overflow tank connected to the transfer tank that can hold up to 300 gallons of additional water. The groundwater extraction and treatment system are passively protected from freeze damage by sloping the groundwater conveyance pipelines towards the transfer tank, thus keeping them empty and reducing the risk of freeze damage. The treatment system is also protected by the use of an equipment enclosure that converts natural radiant energy into heat.

In addition to the interlock fail-safe system, all facility pipelines will be visually monitored weekly for leaks. A preventative maintenance schedule for the treatment system is presented in Appendix F.

Safety procedures as defined by the Construction and O&M Health and Safety Plans (Appendices E and G), Standard Operating Procedures (SOPs), and Integration Work Sheets will be followed during treatment facility construction and O&M. The QA/QC Plans that were developed in support of the construction and O&M of the Pit 7 Complex ground water extraction and treatment system are presented in Appendices D and F, respectively.

5.5. Source Control through Drainage Diversion

An engineered drainage diversion system will be installed to reduce recharge to ground water, and prevent subsequent inundation of the Pits 3, 4, 5, and 7 landfills and the underlying contaminated bedrock. This approach will isolate the contaminant sources, effectively preventing further releases from the landfill waste and vadose zone bedrock. The design of the drainage diversion system is discussed in Section 5.5.1. Performance standards and monitoring of the drainage diversions system are discussed in Section 5.5.2. Construction QA/QC and safety procedures and guidance and post-construction operations and maintenance procedures are discussed in Section 5.5.3.

5.5.1. Engineered Drainage Diversion Design and Specifications

Contaminant releases from the Pit 7 Complex landfills and underlying contaminated bedrock are directly related to rainfall intensity and subsequent ground water elevation rises. A water balance study conducted as part of the Pit 7 RI/FS indicated that in an average rainfall year and normal recharge conditions, the contaminant sources are isolated from shallow ground water and potential releases are not likely. When the rainfall increases to above normal levels, such as during El Niño years, the pit waste and underlying bedrock are inundated and residual contamination comes into contact with shallow subsurface ground water.

The drainage diversion system design is not intended to capture 100% of the precipitation that falls on the Pit 7 Complex. Rather, it is designed to divert excess surface water runoff and shallow subsurface water from the hillslopes to the west and east of the Pit 7 Complex landfills during these heavy rainfall events to minimize water table rises. This will prevent shallow

ground water from coming in contact with pit waste and underlying bedrock and releasing contaminants to ground water.

To achieve this objective, this system has been designed to divert a significant volume of water during intense, El Niño-type rainfall events. The water from the western hillslope would be diverted and discharged to the watershed north of the Pit 7 watershed and will not recharge the HSUs in the Pit 7 watershed, which is hydraulically isolated from the watershed to the north. The water diverted from the eastern hillslope would stay in the watershed but will be discharged south of the landfills at a distance of about 270 ft south of Pit 5 and about 450 ft southeast of Pit 7. Because the alluvial channel fill and weathered bedrock HSU (Qal/WBR) is highly permeable compared to the underlying bedrock, this infiltrating water will quickly recharge the Qal/WBR HSU and flow downgradient (south). Any short-term water table rises would occur further downgradient at distances that will not affect the landfills or underlying contaminated bedrock. Because all this water will be diverted prior to entering the pits, it will be devoid of contaminants and therefore would not adversely impact the water quality for downstream users, springs, or wetlands. The diversion system has also been designed to minimize the creation of wetlands, by discharging to areas where infiltration is fairly rapid, and will not significantly alter the regional recharge conditions in the Pit 7 Complex or the overall ground water basins. There are four components that comprise the drainage diversion system (Figure 22):

1. A subsurface drainage network on the western hillslope.
2. Upgraded riprap at the end of the existing north-flowing concrete channel for the Pit 7 landfill cap.
3. A vegetated surface water diversion swale along the base of the eastern hillslope along the paved road (Route 4), including several culverts under Route 4 and dirt fire trails.
4. An upgraded surface water settling basin at the south end of the existing south-flowing concrete channel for the Pit 7 landfill cap.

Erosion control measures will be implemented in areas of soil disturbance during and after construction to prevent soil particles from detaching and being transported in storm water runoff. These measures may include the application of erosion control blankets, check dams, seeding, and/or lining swales in areas of concentrated flow paths. At the completion of construction, hydroseed will be applied to disturbed soil areas. Excess soil generated by the construction project will be re-graded to blend into the existing landscape and hydroseeded on erosion control blankets at the completion of the project.

The new drainage diversion systems to be installed on the western and eastern hillslopes are described in Sections 5.5.1.1 and 5.5.1.2, respectively. The existing drainage channel at the Pit 7 Complex is discussed in Section 5.5.1.4.

5.5.1.1. Drainage Diversion System on the Western Hillslope

Most rain water infiltration occurs on the hillslope west of the landfills due to the presence of colluvium and weathered bedrock. Therefore, a subsurface drainage network, consisting of several trenches, will be constructed in this area to collect and divert shallow ground water and surface water. As shown in Figure 22, the drainage diversion trench system includes an upper and lower trench network, each consisting of one long trench and one short trench that will be installed roughly parallel to the slope contours to capture surface water and shallow subsurface water on the western hillslope. In addition, three short trenches containing solid pipe will be

installed perpendicular to the slope contours to convey the captured water to the existing concrete drainage ditch at the western perimeter of the Pit 7 Landfill cap. The trench design is described below. Appendix H contains the detailed 100% Title II Design drawings for the drainage diversion system including trench locations and detailed cross-sections of drainage diversion features.

The upper and lower trench networks are spaced approximately 80 to 150 ft apart along the hillslope. The long trench portion of the upper trench network runs roughly along the 1,550 ft above msl elevation contour and is located below and immediately east of the bedrock-colluvium contact. Because this upper trench is located directly downhill of bedrock, it was designed to capture the surface water flow that predominates at this location on the hillslope. The upper trench network will be installed to a depth of 3 ft with the sides and bottom lined with an impermeable geofabric. Because the lower trench network is located where colluvium is present on the hillslope, it was designed to capture both surface water flow and shallow subsurface water flow in the colluvium. The lower trench network will be installed to a depth of 8 feet. A portion of the uphill side of these trenches will be lined with a permeable geofabric to capture subsurface colluvial flow. The bottom and downhill side will be lined with an impermeable geofabric. A perforated HDPE pipe will be installed approximately 1-inch above the base of all the trenches and surrounded by drain rock to the top of each trench. Bedding will be placed below the pipe to ensure the pipe is not damaged during settling. The trenches will be filled to the top with drain rock. The upslope side of each trench has a 3 ft wide, 6- to 12-inch thick apron of drain rock underlain by impermeable fabric to convey surface water into the trench. There is a 1.5-ft high mound on the downslope side of each trench to impede any surface flow that is not caught by the trench.

All these trenches are sloped to passively drain water to three subsurface trenches that are filled with non-perforated pipe surrounded by native soil fill. These latter three trenches run roughly perpendicular to the slope and drain to an existing concrete-lined surface drainage channel along the west side of the Pit 7 Landfill cap. The capacity of the existing drainage channel is discussed in Section 5.5.1.3. This existing drainage channel collects and directs surface water runoff to the north where it discharged to riprap where water energy/velocity is dissipated to prevent erosion. LLNL has observed the operation of this structure over many storm events and determined that the existing outlet structure and the associated riprap required considerable maintenance due to sedimentation issues. As a result, the riprap at the end of the existing north-flowing concrete-lined drainage channel will be upgraded to provide additional protection against erosion and to facilitate maintenance. Water will infiltrate the sediments in the extensive flat area beyond the riprap. The water that will be diverted during intense storms out of the ground water basin/watershed that includes the Pit 7 Complex is not significant in comparison to the overall volume of precipitation that fall on this basin/watershed and ultimately recharges the extensive aquifer that exists within $Tnbs_1/Tnbs_0$ strata within the East Firing Area, east and south of the Pit 7 Complex.

5.5.1.2. Drainage Diversion System on the Eastern Hillslope

A surface water diversion swale (Figure 22) will be installed along the paved road that runs at the base of the eastern hillslope to collect and convey surface water runoff from the slope before it can enter valley fill alluvium and underlying weathered bedrock. Because the hillslope east of the Pit 7 Complex mainly consists of unweathered bedrock with minimal infiltration

capacity, rainwater tends to move downslope as surface runoff/sheet flow. Therefore, the surface water diversion swale is capable of capturing this water as opposed to the subsurface structures that are necessary on the western hillslope to address shallow, subsurface flow in the colluvium. The base of the diversion swale is lined with impermeable geofabric and filled with a perforated pipe surrounded by drain rock. The fabric will be lapped and buried to reduce deterioration by the elements and to convey upslope surface water. Compacted native soil will be installed within the swale and is covered with a grass-blend hydroseed and an erosion control blankets. The swale is trapezoidal in cross-section in some reaches and a V-ditch in cross-section in other reaches of the channel. Two corrugated metal pipe culverts will convey the water in the swale beneath dirt fire trails. The water will be routed through a corrugated metal pipe culvert under Route 4 to a new settling basin, located at the southern end of the existing south-flowing concrete-lined drainage channel. The new settling basin will dissipate the energy of the water prior to it entering the existing riprap which will be rebuilt. Existing erosion damage will be repaired. The improved design will prevent erosion damage, reduce sedimentation, and enable rapid infiltration to prevent wetland formation.

5.5.1.3. Methodology for Hydrology and Hydraulics Calculations in the Design of the Drainage Diversion System

The U.S. EPA and DTSC requested that a discussion of the methodology used in the hydrology and hydraulics calculations for the drainage diversion system design capacity be included in the Remedial Design report. In particular, they requested information to support that the system was designed to accommodate runoff from a 25-year, 24-hour event to meet LLNL general construction requirements, a DTSC-specified 50-year, 24-hour storm, and a 100-year, 24-hour storm as specified in 27 CCR 20365 that is discussed in this section. The detailed hydrology and hydraulics calculations are included in Appendix H.

The guidance provided in the San Joaquin County Improvement Standards and the San Joaquin Hydrology Manual (SJCHM) was used to determine the rainfall intensity and resulting runoff for the design of the new drainage diversion system. The manual recommends the use of 10-year tables (Table B-10 in Appendix H) in combination with site-specific time-of-concentration values.

For example, to determine the total runoff from the eastern hillslope, rainfall intensity values of 1.6 to 2.2 inches per hour of precipitation for a 10-year, 8 to 12 minute time-of-concentration were used in the design calculations. These are significantly higher (more conservative) than the 25-year, 24-hour rainfall intensity value of 0.11 inches per hour (SJCHM Table B-11), the 50-year, 24-hour value of 0.11 inches per hour (SCJHM Table B-12), and the 100-year, 24-hour value of 0.13 inches per hour (Table B-13) required in 27 CCR 20365. SJCHM Tables B-10, B-11, B-12, and B-13 are contained in Appendix H.

Using the rainfall intensity values of 1.6 to 2.2 inches per hour precipitation for a 10-year, 8 to 12 minute time-of-concentration and the methodology defined in the San Joaquin County Hydrology Manual, the total runoff of the eastern hillslope drainage system was 60.1 cubic-feet per second (cfs). Using the Rational method, the total runoff calculated for the eastern hillslope drainage system is about 2.2 cfs using the 25-year storm event, 2.2 cfs using the 50-year storm event, and 2.6 cfs using the 100-year storm event. Table 6 presents a comparison of rainfall intensity and total runoff calculations for the eastern hillslope using the San Joaquin County Hydrology Manual method and the Rational method.

Calculation of the design parameters of the western hillslope drainage system were also performed using similar conservative rainfall intensity and total runoff values that exceed the requirements of 27 CCR 20365. These calculations yield an estimated 8.9 cfs of total runoff from the western hillslope using the methodology defined in the San Joaquin County Hydrology Manual. This is a significantly higher (more conservative) value of runoff than the total runoff calculated using the Rational method of 0.4 cfs for a 25-year storm event, 0.4 cfs for a 50-year storm event, and 0.5 cfs for a 100-year storm event.

In addition, data collected at the Site 300 meteorology station indicate an annual rainfall at Site 300 of 10.47 inches per year (38-year average). However, an annual rainfall of 12 inches per year (Mean Annual Precipitation "MAP" in San Joaquin County Hydrology Manual Tables) based on San Joaquin County's rainfall contour maps was conservatively used in all runoff calculations.

Therefore, the design parameters for the new drainage diversion system using the San Joaquin County Intensity-Duration-Frequency Tables B-10 through B-13 and a mean annual rainfall of 12 inches (conservative for Site 300) are conservative and exceed the requirement for design to a 100-year, 24-hour storm event required in 27 CCR 20365. The 10-year time-of-concentration value approach is also more conservative than the values for a 25-year, 24 hour event required by LLNL and a 50-year, 24 hour event suggested by DTSC.

5.5.1.4. Existing Drainage Diversion Channel

The existing, concrete-lined drainage channel was installed in 1992 as part of the Pit 7 Landfill cap surface water drainage system. The runoff from the new drainage diversion system will not exceed the capacity of the existing drainage channel since this water was already accounted in the design of the existing drainage channel. For example, the design flow rate of 3.2 cfs for the existing concrete-lined channel was based on runoff calculated using the Rational method. As discussed in Section 5.5.1.3, the runoff calculated using the Rational method were 2.6 cfs and 0.5 cfs (100-year storm-event) for the eastern and western hillslope drainage systems, respectively.

As a result, the design of the existing drainage channel: (1) is sufficient to accommodate flow from the new drainage diversion system, and (2) exceeds the requirement for design to a 100-year, 24-hour storm event as required in 27 CCR 20365.

5.5.2. Performance Standards and Monitoring for the Drainage Diversion System

The objective of the drainage diversion system is to control/isolate contaminant sources in the Pit 7 Complex by preventing lateral and upward flow of ground water into the pit waste and underlying contaminated bedrock that could result in contaminant releases to ground water.

The performance of the drainage diversion system in achieving this objective will be evaluated in two ways: (1) by monitoring tritium, uranium, VOC, nitrate, and perchlorate activities/concentrations in ground water samples from select wells immediately downgradient of the landfills, and (2) by monitoring water levels in specific wells located in the vicinity of the pits and on the hillslope west of the pits. Many of these wells have long histories of water level monitoring that can be used to compare to future rainfall events to demonstrate the impact of the drainage diversion system.

Continuous water level monitoring will be conducted in twenty-two wells/piezometers within the Pit 7 Complex, including thirteen monitoring wells (K7-01, K7-06, NC7-16, NC7-17, NC7-21, NC7-22, NC7-24, NC7-34, NC7-48, NC7-51, NC7-53, W-PIT7-1718, and W-PIT7-1724), two piezometers within the infiltration trench (W-PIT7-2419 and W-PIT7-2420), and the seven extraction wells. These wells will be monitored with dedicated pressure transducers at frequencies of 15 minutes to 6 hours, depending on rate of water level change, to ensure that water elevation hydrographs include all responses of the piezometric surface to rainfall recharge and effluent discharge. The monitoring wells selected for continuous monitoring provide thorough geographic coverage and several are located within the portions of the HSUs that historically show the largest increases in piezometric surface elevation over the shortest times. This continuous water level monitoring will be conducted for at least the next two rainy seasons. Water level measurement frequencies for extraction wells, monitor wells, and piezometers in the Pit 7 Complex are presented in Table B-3.

This detection monitoring will be conducted in accordance with the sampling plan contained in Table B-3 of Appendix B until the Site-Wide Compliance Monitoring Plan is revised in 2009. At that time, the sampling requirements in the revised Site-Wide Compliance Monitoring Plan will supercede the sampling plan contained in Appendix B. The current Detection Monitoring Program conducted under the Resource Conservation and Recovery Act (RCRA) will be re-evaluated as part of this process and will be folded into the overall compliance monitoring for the Pit 7 Complex. DOE/LLNL will work with the regulatory agencies to develop statistical criteria and trend analysis that are more appropriate for defining chemical releases from the landfills, in this area of active extraction and treatment of ground water, than is the current statistical limits system. The results of this monitoring will be presented in the semi-annual Compliance Monitoring Reports.

In addition to the monitoring and assessment of ground water data, the water budget for the Pit 7 Complex catchment area will be evaluated on an ongoing basis. This information will be used to calculate the net volume of water available for recharge of ground water in the Qal/WBR and $Tnbs_0$ HSUs in the Pit 7 Complex area to compare to previous rainfall seasons where ground water elevations exhibited significant increases.

Indications that the drainage diversion system is not operating as intended include all of the following criteria:

- Ground water elevation responses to rainfall events observed in key monitoring wells are similar to those observed before the installation of the drainage diversion system.
- Maximum ground water rises into the pit waste and underlying contaminated bedrock as indicated by ground water elevation data.
- Increasing trends in tritium, uranium, VOC, or perchlorate activities/concentrations are observed over a period of at least four quarters in ground water samples from wells downgradient of the landfills that are identified in Appendix B, Table B-3.

If monitoring and evaluation of the drainage diversion system indicate that the current design is not effective in controlling/isolating the contaminant source and preventing releases, DOE/LLNL will discuss corrective measures with the regulatory agencies. For example, the current system design is comprised of several components that can be expanded or modified as the system's performance is monitored. The Site 300 Contingency Plan will be modified to include actions that may be implemented in the event that the drainage diversion system does not

control/isolate the contaminant source in the Pit 7 Complex landfills and underlying contaminated bedrock. If such a situation arose, DOE/LLNL would discuss possible remedy changes with the regulatory agencies. Any significant or major remedy changes would be documented in an Explanation of Significant Differences or a ROD amendment.

5.5.3. Construction and Operations and Maintenance Procedures

The QA/QC plans that were developed in support of the construction of the Pit 7 Complex drainage diversion system construction are summarized in Appendix D. Safety procedures as defined by the Construction Health and Safety Plan (Appendix E), SOPs, and Integration Work Sheets will be followed during drainage diversion system construction. Appendix F contains operations and maintenance procedures and QA/QC plans.

5.6. Contingency Planning

The revised Site-Wide Compliance Monitoring Plan, scheduled for 2009, will describe how DOE and the regulatory agencies plan to address foreseeable problems that may arise during the remediation and monitoring of contaminants conducted in the Pit 7 Complex. It will also describe the approaches for modifying the Pit 7 monitored natural attenuation of tritium, the extraction and treatment system, and the drainage diversion system as remediation progresses and as additional information is collected.

5.7. Construction, Startup, and Document Schedule

DOE/LLNL has completed the design of the Pit 7 Complex ground water extraction and treatment system and drainage diversion. The construction and startup schedule for these systems are shown in Table 7. The submittal dates for the Pit 7 Complex Five-Year Review documents are also included in Table 7.

5.8. Cost Estimates

Cost estimates for ground water monitoring, including: (1) the monitored natural attenuation remedy component for tritium, (2) the design, construction, startup, and annual O&M of the Pit 7 Complex ground water extraction and treatment system, and (3) design, construction, and annual operations and maintenance of the drainage diversion system are summarized in Tables 8, 9, and 10, respectively.

The cost estimate for the ground water extraction and treatment system, the drainage diversion system, and the monitored natural attenuation remedy component for tritium includes long-term monitoring (e.g., sample collection and analysis), and data management, evaluation, and reporting. The cost estimates for the ground water extraction and treatment system and the drainage diversion system also include capital cost to fabricate, construct, and install the systems, as well as long-term operation and maintenance costs.

Long-term O&M costs were calculated using present-value analysis and the U.S. Office of Management and Budget's 2006 published values for inflation and discount rates. A present-value cost is the amount needed to be set aside or invested at the start of a remediation project to assure that funds will be available in the future as they are needed. This process assumes that the funding invested at the beginning of the project would accrue interest at a rate of 3 to 5%. To

account for this, a discount rate is applied to the project costs to derive a present-worth cost. However, the U.S. government funding process does not allow for funding for the entire project to be set aside or invested at the start of the process. Funding for government-funded remediation projects is allocated at the start of each fiscal year during which the work will occur. Therefore, the actual long-term costs to operate and maintain the ground water extraction and treatment system, and to conduct compliance monitoring will be higher than the present-worth costs presented in this RD.

The following assumptions apply to the cost estimates for the construction and long-term O&M of the ground water extraction and treatment system:

- Three additional ground water extraction wells will be installed in the future as hydrologic conditions change due to the installation of the drainage diversion system. The costs for these wells are included in Table 9.
- All pipelines are constructed above ground and do not require secondary containment except where crossing roads.

The following assumptions apply to the cost estimates for the construction and long-term O&M:

- Spent treatment media will be disposed as mixed waste. If the spent media is not characterized as mixed waste, disposal costs will be lower.
- The injection trench can accommodate effluent discharge volume from the facility, as designed. Additional infiltration trenches are not needed to accommodate flow from future extraction wells.
- Treatment facility effluent limitations that will be selected in the Final Site-Wide ROD are not significantly different than the current RWQCB Substantive Requirements, such that treatment facility modifications or a significant increase in facility maintenance and/or monitoring are required.
- No major schedule delays are encountered due to inclement weather, conflicts with programmatic activities, or regulatory delays.
- The hydrogeologic conceptual model and subsurface conditions do not change significantly.

The following assumptions apply to the cost estimates for the construction and long-term O&M of the drainage diversion system:

- No major schedule delays are encountered due to inclement weather, conflicts with programmatic activities, or regulatory delays.
- Major modifications to the system are not required.
- The hydrogeologic conceptual model and subsurface conditions do not change significantly.
- The drainage diversion system will be effective in maintaining ground water levels below contaminant sources without modifications.

The following assumptions apply to the cost estimates for the compliance monitoring for the monitored natural attenuation, ground water extraction and treatment, and the drainage diversion system:

- Regulatory compliance monitoring requirements do not change significantly throughout the life of the project.
- The number of monitor wells to be sampled and/or frequency does not change significantly throughout the life of the project.
- The existing monitor well network is adequate to monitor the remedy effectiveness.
- No new contaminants are identified that significantly increase the amount of required sampling and analysis.

6. Remedial Action Work Plan

The Remedial Action Work Plan for the Pit 7 Complex includes the design and implementation of a ground water extraction and treatment system and drainage diversion as described in Section 5, and QA/QC Plans and Health and Safety Plans for construction and O&M that are attached in Appendices D, E, F, and G. Monitoring and reporting requirements for the ground water treatment system and monitor wells are included in Section 6.2 and Appendix B, and will be included in the Site-Wide Compliance Monitoring Plan scheduled for 2009. In addition, requirements for onsite storage and offsite shipment of hazardous waste, preliminary remediation completion criteria, and procedures for facility and well closure are discussed in this section.

6.1. Quality Assurance/Quality Control and Health and Safety Plans

The QA/QC and the Health and Safety Plans for construction are presented as Appendices D and E of this document. The QA/QC Plan for construction defines the quality objectives and areas of responsibility for the construction of the ground water extraction and treatment facility and the drainage diversion system. The Health and Safety Plan for treatment system construction defines areas of responsibility for health and safety during construction activities and references existing LLNL Health and Safety documents that address construction health and safety issues. Because the design and construction of the drainage diversion system was contracted, the Health and Safety Plan for the construction work was written by the construction contractor to protect its employees and the interests and health and safety of other people and the environment. Guidance in writing this plan was provided by LLNL health and safety professionals. The contractor health and safety plan is referenced in Appendix D.

The QA/QC Plan for O&M of the ground water extraction and treatment facility and drainage diversion system is presented in Appendix F. This plan describes the organizational structure, responsibilities, and authority for O&M QA/QC and the objectives, quality goals, and QA elements for O&M. Appendix G contains the Health and Safety Plan for O&M of the ground water extraction and treatment facility and drainage diversion system. This plan presents: (1) organizational structure and responsibilities, (2) hazard analyses and control measures, (3) training requirements for performing O&M, and (4) emergency safety procedures.

6.2. Monitoring and Reporting Programs

Monitoring requirements for the monitored natural attenuation of tritium, the ground water treatment system, and the drainage diversion system are presented in Appendix B. These

requirements will be incorporated into the revised Site-Wide Compliance Monitoring Plan in 2009. Monitoring results and performance information for the monitored natural attenuation of tritium, the ground water extraction and treatment system, and the drainage diversion system will be reported in the Semi-annual Site-Wide Compliance Monitoring Reports, starting with the 2008 annual report. The monitoring programs for the monitored natural attenuation of tritium, the ground water treatment system, and the drainage diversion system are summarized in Sections 6.2.1, 6.2.2, and 6.2.3, respectively.

6.2.1. Monitored Natural Attenuation of Tritium in Ground Water

The sampling and analysis plan to monitor the natural attenuation of tritium in ground water, including wells to be sampled and sampling frequency, is presented in Table B-3 of Appendix B. Tritium activities in ground water will be determined by analyzing samples collected for monitor wells to track changes in plume activities and extent that result from natural processes such as radioactive decay, dispersion, adsorption, and advection. Tritium analysis will be performed according to EPA Method E906. Results will be evaluated according to QA/QC procedures contained in the Quality Assurance Project Plan (Dibley, 1999). Measured tritium activities will be used to prepare isoconcentration contour maps to assess the progress of the natural attenuation of tritium in ground water at the Pit 7 Complex.

6.2.2. Ground Water Extraction and Treatment System Influent and Effluent

The monitoring requirements for the Pit 7 Complex ground water extraction and treatment system are specified in the RWQCB Substantive Requirements for the Pit 7 Complex Ground Water Extraction and Treatment System (Appendix B). Chemical analyses will be performed according to EPA Methods when available. Results will be evaluated according to QA/QC procedures contained in the Quality Assurance Project Plan (QAPP) (Dibley, 1999). Quarterly treatment facility influent and monthly effluent monitoring will be conducted and the results used to evaluate facility performance and to verify that discharge requirements are met. The treatment facility influent and effluent samples will be analyzed for tritium, uranium, nitrate, perchlorate, and VOCs.

As discussed in Section 5.4.4, effluent discharge limits for treated ground water discharged from treatment facilities at Site 300 are currently being discussed by DOE, EPA, DTSC, and RWQCB and will be selected in the Final Site-Wide ROD in 2008. Until these effluent discharge limits are selected, ground water will be treated to meet the effluent discharge limits for VOCs, uranium, nitrate, and perchlorate contained in the Substantive Requirements issued by the RWQCB and summarized in Table B-1 in Appendix B. These current effluent discharge limits are sufficiently low to protect human health and the environment in the interim. Once the effluent discharge limits are selected in the final Site-Wide ROD, those discharge limits will supercede the interim discharge limits contained in Table B-1 in Appendix B. The treatment facility would be retrofitted as necessary to comply with the agreed-upon effluent discharge limits. These discharge limits and other monitoring and reporting requirements will be included in the revised Site-Wide Compliance Monitoring Plan scheduled for 2009.

6.2.3. Ground Water Extraction and Monitor Wells

Contaminant concentrations in ground water will be determined by analyzing samples collected from extraction and monitor wells to track changes in plume concentration and extent

that result from remediation and natural processes such as dispersion, adsorption, advection, and biodegradation. Chemical analyses will be performed according to EPA Methods when available. Results will be evaluated according to QA/QC procedures contained in the Quality Assurance Project Plan (QAPP) (Dibley, 1999). Measured contaminant concentrations in ground water will be used to prepare isoconcentration contour maps to assess cleanup progress. Semi-annual monitoring for primary COCs (tritium and uranium) and annual monitoring for secondary COCs (VOCs, nitrate, and perchlorate) will be conducted in Pit 7 Complex ground water extraction and monitor wells.

6.2.4. Drainage Diversion System

The sampling and analysis plan to monitor the effectiveness of the drainage diversion system in preventing further releases from the Pit 7 Complex Landfills and underlying contaminated bedrock is presented in Table B-3 of Appendix B. Chemical analyses will be performed according to EPA Methods when available. Results will be evaluated according to QA/QC procedures contained in the Quality Assurance Project Plan (QAPP) (Dibley, 1999).

Tritium, uranium, VOC, nitrate, and perchlorate activities/concentrations in ground water samples will be determined by analyzing samples collected from select wells immediately downgradient of the landfills. The analytical data will be evaluated for indications of new releases of contaminants from the Pit 7 Complex landfills and underlying bedrock.

As discussed in Section 5.5.2, DOE/LLNL will work with the regulatory agencies to develop statistical criteria and trend analysis that are more appropriate for defining releases from the landfills, in this area of active extraction and treatment of ground water, than is the statistical limits system currently used for the RCRA Detection Monitoring Program.

6.3. Hazardous Waste Handling

Aqueous-phase GAC and the ion-exchange resin in the Pit 7 Complex ground water extraction and treatment system will be replaced as needed to remain in compliance with the RWQCB Substantive Requirements discharge limits. The spent GAC and ion-exchange resin will be characterized and then shipped offsite for disposal. If the spent GAC and ion-exchange resins are characterized as mixed waste, it will be removed for offsite disposal at an appropriate permitted facility. If the spent treatment media is characterized as low-level radiological waste, it will be removed for offsite disposal at the Nevada Test Site.

Shipment and disposal are in accordance with Department of Transportation (DOT) 49 CFR and EPA 40 CFR. Additionally, waste shipments are made according to CCR, Title 22 Section 66260.1 requirements. The spent GAC and resin from the treatment system will be packaged and labeled for shipment by the LLNL Radioactive and Hazardous Waste Management Division (RHWMD).

6.4. Performance Assessment

The performance of the remedy for the Pit 7 Complex will be assessed and the results of will be reported in the semiannual Site-Wide Compliance Monitoring Reports, starting with the 2008 annual report. The performance assessment of the monitored natural attenuation of tritium, ground water extraction and treatment, and the drainage diversion system remedy components are discussed in Sections 6.4.1, 6.4.2, and 6.4.3, respectively.

6.4.1. Tritium Monitored Natural Attenuation Performance Assessment

The performance of the monitored natural attenuation remedy for the Pit 7 Complex tritium plume in ground water will be assessed by: (1) monitoring the tritium activity trends in ground water monitor wells, (2) constructing contaminant plume maps showing the extent of tritium in ground water, (3) estimating the total activity in ground water and comparing to previous years, and (4) comparing the measured tritium activities from wells to predicted results.

Fate and transport modeling was conducted in the RI/FS for the Pit 7 Complex (Taffet et al., 2005) that predicted reductions in tritium activities in ground water over time due to natural attenuation. The models estimated that tritium activities in the Qal/WBR and $Tnbs_o$ HSUs would attenuate to below the 20,000 pCi/L MCL in 30 to 40 and 35 years, respectively. The modeled activity reductions over time can be compared to the actual tritium activity trends and the extent of tritium in ground water as represented by isoconcentration contours to evaluate the effectiveness of natural radioactive decay in reducing tritium activities in ground water to meet cleanup standards.

6.4.2. Ground Water Extraction and Treatment System Performance Assessment

As described in Section 5.4.4 and Appendix B, DOE/LLNL will monitor water levels and uranium, nitrate, perchlorate, and VOC concentrations in ground water extraction and monitor wells. This information will be used to monitor for changes in the magnitude and direction of ground water flow and as input to ground water models to determine plume capture efficiency. Upon periodic review of the capture zone analysis, it may be determined that the plumes are not being captured as intended due to an invalid design assumption or a change in hydrogeologic conditions. In this event, measures such as adjusting extraction well flow rates and/or configuration will be taken to optimize contaminant mass removal. If necessary, the need to install additional extraction wells would be discussed with the regulatory agencies.

The volume of contaminant mass removed by the ground water extraction system will be calculated and reported. Each extraction well will be assessed for its mass removal and plume capture ability. Trends in extraction well and influent concentrations and mass removal rates will be analyzed to optimize system operations to achieve cleanup standards.

6.4.3. Engineered Drainage Diversion Performance Assessment

As described in Section 5.4.4 and Appendix B, DOE/LLNL will monitor water levels and uranium, nitrate, perchlorate, and VOC concentrations in select ground water monitor wells in the vicinity of the Pit 7 Complex landfills. This information will be used to assess the effectiveness of the drainage diversion system in controlling/isolating contaminant sources in the Pit 7 Complex landfills and underlying bedrock.

Criteria that the drainage diversion system is effective include: (1) ground water elevation data indicate that water levels remain below the pit waste and underlying contaminated vadose zone, and (2) trends of tritium, uranium, VOC, and perchlorate activity/concentration in specific wells do not increase significantly over a period of at least four quarters.

If monitoring and assessment of the drainage diversion system indicate that the current design is not effective in controlling/isolating the contaminant source and preventing releases, DOE/LLNL will discuss corrective measures with the regulatory agencies.

6.5. Requirements for Closure

This section specifies requirements for determining when ground water cleanup has been completed and site closure activities, including post-closure monitoring, can begin.

6.5.1. Ground Water Cleanup

Ground water extraction and treatment for uranium, perchlorate, nitrate, and VOCs and the monitored natural attenuation of tritium in ground water will be deemed complete when the analysis of ground water samples from all monitor wells demonstrate that the concentrations of contaminants meet cleanup standards, which will be selected and codified in the Final Site-Wide ROD.

When contaminant concentrations in ground water have been reduced to the agreed upon cleanup standards, the ground water extraction and treatment system will be shut off and placed on standby with agreement from the regulatory agencies. Contaminant concentrations may rise in ground water after extraction ceases due to slow desorption from fine-grained sediments. Therefore, ground water post-closure monitoring will be performed for two years after pumping ceases. Should contaminant concentrations in ground water rebound above cleanup standards, re-initiation of remediation efforts will be discussed with the regulatory agencies.

Concentrations of nitrate and natural uranium in ground water may also increase after extraction ceases due to continued contributions of these constituents from natural sources in the alluvium and bedrock. In this event, DOE/LLNL, in consultation with the regulatory agencies, will evaluate whether increases in nitrate and natural uranium concentrations result from continued contributions from anthropogenic sources in the landfills, or are derived from natural sources.

When tritium activity in ground water have attenuated to the agreed upon cleanup standard, ground water monitoring of tritium will also be performed for an additional two years to determine if tritium activities rebound above cleanup standards. Should tritium concentrations in ground water rebound above cleanup standards, monitoring will continue.

Cleanup will be considered complete when contaminant concentrations in ground water remain below the cleanup standards for two years. After concurrence with the regulatory agencies that cleanup is complete, the Pit 7 Complex extraction wells and monitor wells will be decommissioned. Wells will be closed by *in situ* casing perforation and pressure grouting, or by well removal as appropriate, consistent with the approved LLNL Livermore Site and Site 300 Environmental Restoration Project SOPs (Goodrich and Wimborough, 2006). Wellhead abandonment will include removal of any protective covers, instruments, and concrete pads. The upper 2 to 3 ft will be filled with low-permeability soil to restore grade.

After remediation is complete, the Pit 7 Complex ground water extraction and treatment system influent and discharge piping will be decontaminated, dismantled, salvaged, or used at other locations. The drainage diversion system will continue to be maintained as long as contaminants in the pit waste have the potential to impact water quality above cleanup standards.

7. References

Buddemeier, R.W., M.R. Ruggieri, D.W. Carpenter, and D.T. Young (1985), *Tritium in Groundwater at Site 300*, Lawrence Livermore National Laboratory, Livermore, Calif. (UCID-20600).

Dibley, V. (1999), *Quality Assurance Project Plan LLNL Ground Water Project*, Lawrence Livermore National Laboratory, Livermore, Calif. (UCRL-AR-103160 Rev. 2). Ferry, L., R. Ferry, W. Isherwood, R. Woodward, T. Carlsen, Z. Demir, R. Qadir, and M. Dresen (1999), *Final Site-Wide Feasibility Study for Lawrence Livermore National Laboratory Site 300*, Lawrence Livermore National Laboratory, Livermore, Calif. (UCRL-AR-132609).

Goodrich, R., and J. Wimborough (2006), *LLNL Livermore Site and Site 300 Environmental Operating Procedures (SOPs)*, Lawrence Livermore National Laboratory, Livermore, Calif. (UCRL-MA-109115 Rev. 12).

Lindeken, C.L. and D.A. Hieb (1989), *Past and Present Uses, Storage and Disposal of Hazardous Materials at the Lawrence Livermore National Laboratory's Site 300*, Lawrence Livermore National Laboratory, Livermore, Calif.

Raber, E., D. Helm, D. Carpenter, D. Pfeifer, and J. Sweeney (1982), *Site 300 Hazardous Waste Assessment Project, Interim Report: November 1981, Preliminary Site Reconnaissance and Project Work Plan*, Lawrence Livermore National Laboratory, Livermore, Calif. (UCID-19315).

Raber, E. and D.W. Carpenter (1983) An Evaluation of the Hydrogeology and Ground Water Geochemistry Associated with Landfills at LLNL's Site 300, Lawrence Livermore National Laboratory, Livermore, Calif. (UCRL-53416).

Rogers/Pacific Corporation (1990), *Closure and Post-Closure Plans Volume II, Landfill Pits 1 and 7*, prepared for Lawrence Livermore National Laboratory, Livermore, Calif. (EPA ID No. 2890090002).

Rumbaugh, J., and D. Rumbaugh (1996), *WinFlow - Two-Dimensional Groundwater Flow Model*, Environmental Simulations Inc., Herndon, Virginia.

Simmons, L. (1992) personal communications with Michael Wade, Laurene Green, Jack Gardner, and Gwen Caviness, Weiss Associates, and Dave Carpenter, Michael Taffet, and Neil Crow, LLNL.

Taffet, M.J. and A.L. Lamarre (1989), *Remedial Investigation of Landfill Pit 9 Lawrence Livermore National Laboratory Site 300*, Lawrence Livermore National Laboratory, Livermore, Calif. (UCID-21764).

Taffet, M.J., L.C. Hall, T.M. Carlsen, and J.A. Oberdorfer (1996), *Addendum to the Site-Wide Wide Remedial Investigation Report*, *Lawrence Livermore National Laboratory Site 300: Building 850/Pit 7 Complex Operable Unit*, Lawrence Livermore National Laboratory, Livermore, Calif. (UCRL-AR-108131, Addendum 1).

Taffet, M.J., L.C. Hall, T.M. Carlsen, R.J. Woodward, and J.A. Oberdorfer (1997), *Draft Engineering Evaluation/Cost Analysis for the Building 850/Pits 3 and 5 Operable Unit, Livermore National Laboratory Site 300, Lawrence Livermore National* Laboratory, Livermore, Calif. (UCRL-AR-126368DR).

Taffet, M.J., L., Ferry, V. Madrid, T. Carlsen, Z. Demir, J. Valett, M. Dresen, W. Daily, S. Coleman, and V. Dibley (2005), *Final Remedial Investigation/Feasibility Study for the Pit 7 Complex at Lawrence Livermore National Laboratory Site 300*, Lawrence Livermore National Laboratory, Livermore, Calif. (UCRL-AR-202492).

U.S. DOE (2005), *Final Site-Wide Environmental Impact Statement for Continued Operation of Lawrence Livermore National Laboratory and Supplemental Stockpile Stewardship and Management Programmatic Environmental Impact Statement*, *Livermore, California*, U.S. Department of Energy, Washington, D.C.

U.S. DOE (2007), *Amendment to the Interim Site-Wide Record of Decision for the Pit 7 Complex at Lawrence Livermore National Laboratory Site 300,* Lawrence Livermore National Laboratory, Livermore, Calif. (UCRL-AR-222569).

U.S. EPA (1989), *Interim Final Guidance on Preparing Superfund Decision Documents: The Proposed Plan, The Record of Decision, Explanation of Significant Difference, and The Record of Decision Amendment*, Office of Solid Waste and Emergency Response (OSWER), Directive 9335.3-02.

U.S. EPA (1990), *Guidance on EPA Oversight of Remedial Designs and Remedial Actions Performed by Potentially Responsible Parties,* Interim Final, U.S. Environmental Protection Agency, Washington, D.C. (EPA/540/G-90/001).

U.S. EPA (1999), *Use of Monitored Natural Attenuation at Superfund, RCRA Corrective Action, and Underground Storage Tank Sites*, OSWER Directive 9200.4-17P, U.S. EPA Office of Solid Waste and Emergency Response.

Webster-Scholten, C. P., Ed. (1994), *Final Site-Wide Remedial Investigation Report*, *Lawrence Livermore National Laboratory Site 300*, Lawrence Livermore National Laboratory, Livermore, Calif. (UCRL-AR-108131).

Ziagos, J., and E. Reber-Cox (1998), *Building 850/Pits 3 and 5 Tritium Plume Characterization Summary Lawrence Livermore National Laboratory Site 300*, Lawrence Livermore National Laboratory, Livermore Calif.

8. Acronyms and Abbreviations[a]

^{3}He	Helium-3
ARARs	Applicable or relevant and appropriate requirements
CCR	California Code of Regulations
CERCLA	Comprehensive Environmental Response, Compensation, and Liability Act
cfs	cubic feet per second
Ci	Curies
cm/sec	centimeters per second
COC	Contaminants of Concern
DCE	Dichloroethylene
DOE	Department of Energy
DOT	Department of Transportation
DTSC	(California) Department of Toxic Substances Control
EPA	Environmental Protection Agency
EPD	Environmental Protection Department
ERD	Environmental Restoration Division
ES&H	Environmental Safety and Health
ft	feet
GAC	Granular activated carbon
g/ft^3	grams per cubic ft
GFCI	Ground fault circuit interrupter
gpm	gallons per minute
GTU	Granular activated carbon treatment unit
HAC	Hazards Assessment and Controls
HDPE	High density polyethylene
HSU	Hydrostratigraphic unit
IWS	Integrated Work Sheet
Lb	pound
LLNL	Lawrence Livermore National Laboratory
LSI	Light Science and Industry
MCL	Maximum Contaminant Level
mg/L	milligrams per liter
MSDS	Material Safety Data Sheet
MSL	Mean sea level

MTU	Minature treatment unit
NFPA	National Fire Protection Association
O&M	Operation and maintenance
OSHA	Occupations Safety and Health Act
OU	Operable Unit
pCi/L	Picocuries per liter
PECM	Plant engineering construction manager
PEMM	Plant engineering maintenance manager
PEL	Permissible exposure limit
PEPM	Plant engineering project manager
P&ID	Piping and instrumentation diagram
QA	Quality assurance
Qal/WBR	Quaternary alluvium/weathered bedrock
QAMP	Quality Assurance Management Plan
QAPP	Quality Assurance Project Plan
QC	Quality control
RCRA	Resource Conservation and Recovery Act
RD	Remedial Design
ROD	Record of Decision
RPM	Remedial Project Manager
RHWM	Radioactive and hazardous waste management
RWQCB	(California) Regional Water Quality Control Board
SARA	Superfund Amendments and Reauthorization Act
SBA	Strong base anion
SJCHM	San Joaquin County Hydrology Manual
SEP	Safety and Environmental Protection
SJCHM	San Joaquin County Hydrology Manual
SOPs	Standard Operating Procedures
STU	Solar treatment unit
SWFS	Site-Wide Feasibility Study
SWRI	Site-Wide Remedial Investigation
TCE	Trichloroethylene
TLV	Threshold limit value
Tmss	Tertiary Cierbo Formation
$Tnbs_0$	Tertiary Neroly basal sandstone
$Tnbs_1$	Tertiary Neroly lower blue sandstone

$Tnsc_0$	Tertiary Neroly basal siltstone/claystone
^{235}U	Uranium-235 isotope
^{238}U	Uranium-238 isotope
UCRL	University of California Radiation Laboratory
VOCs	Volatile organic compounds
yd^3	cubic yards
yd^2	square yards
$\mu g/L$	Micrograms per liter

Notes:

[a] List includes acronyms and abbreviations used in both the Remedial Design text and the appendices.

Figures

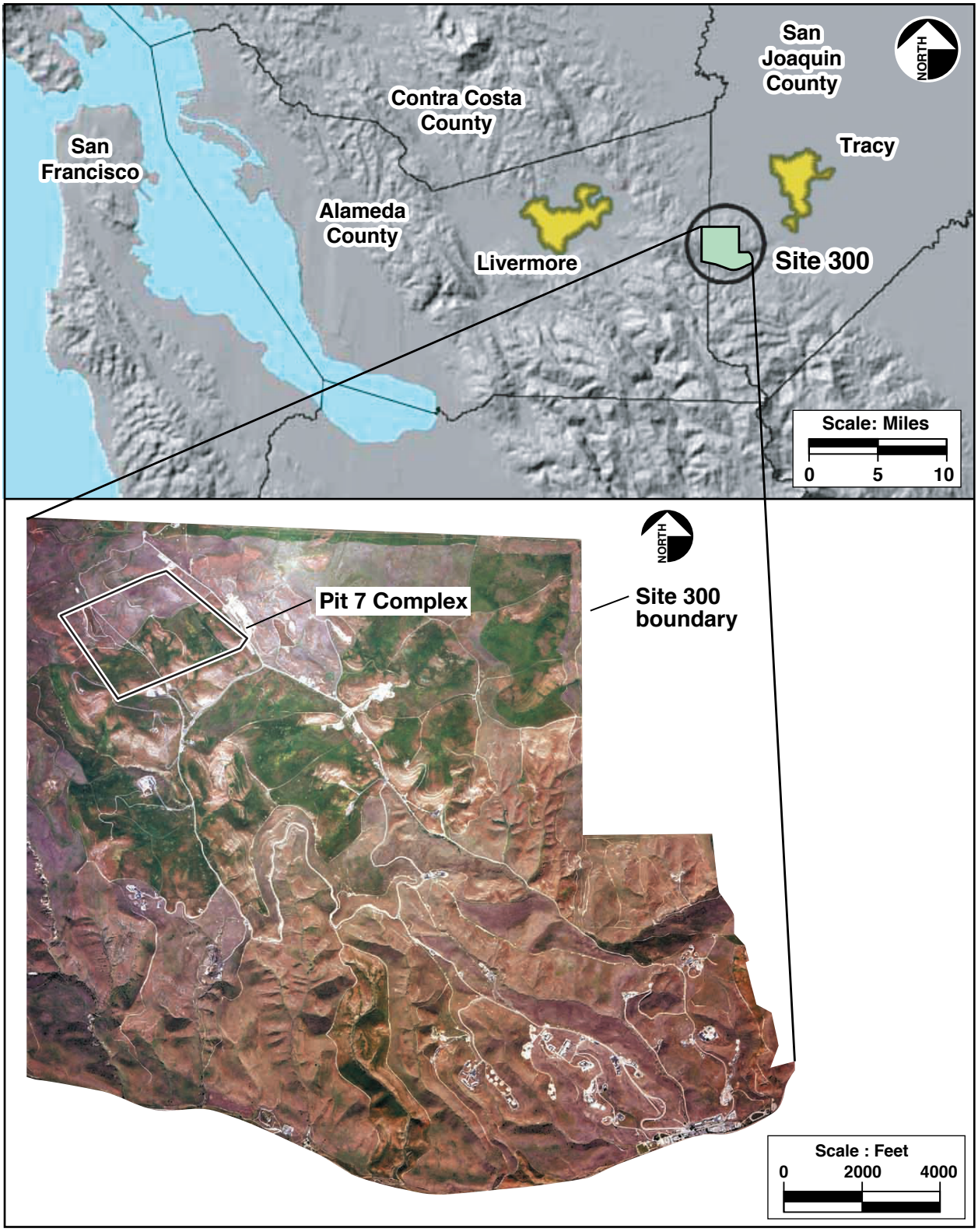

ERD-S3R-07-0096

Figure 1. Location of LLNL Site 300.

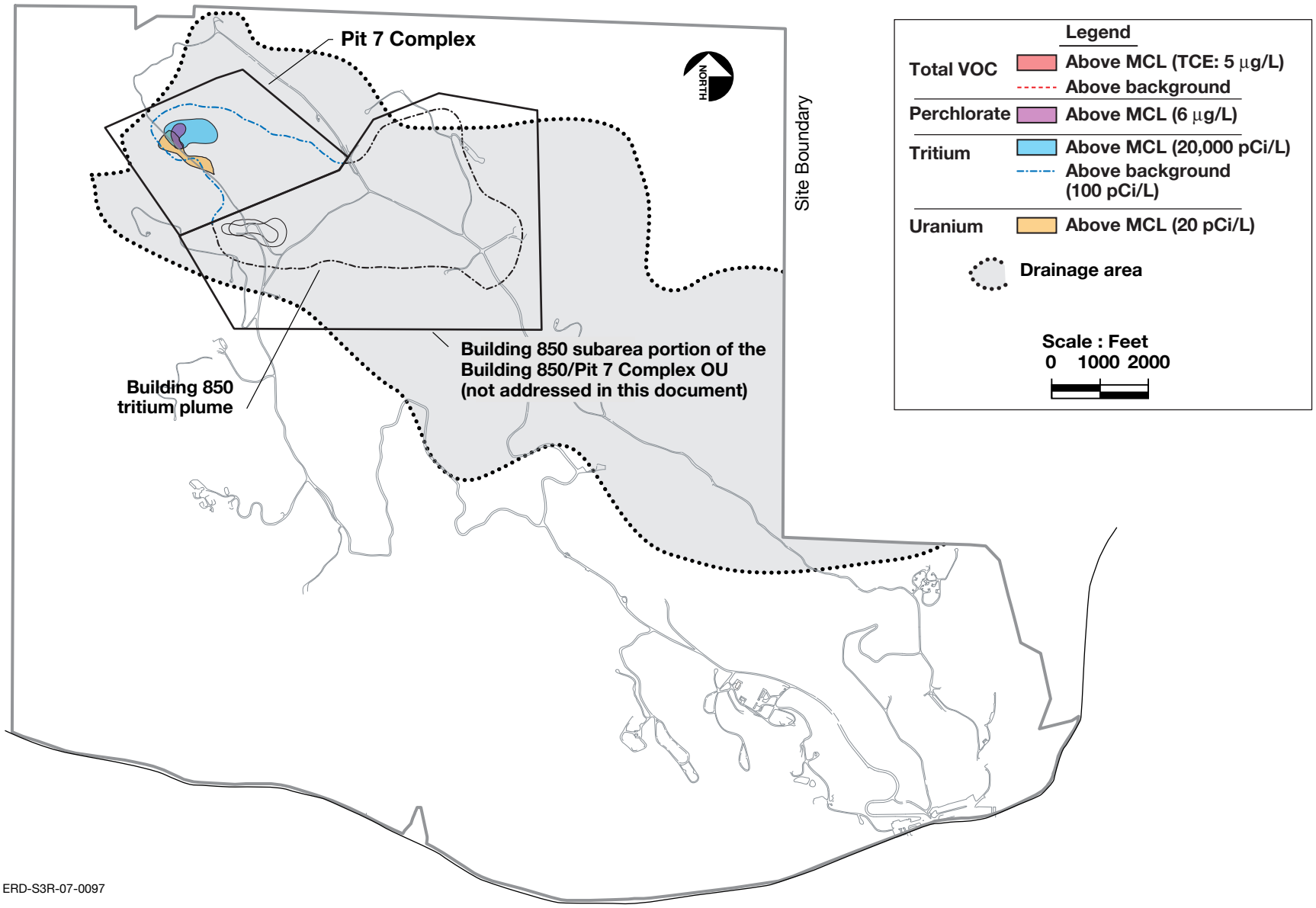

Figure 2. Location of the Pit 7 Complex and contaminant plumes in ground water.

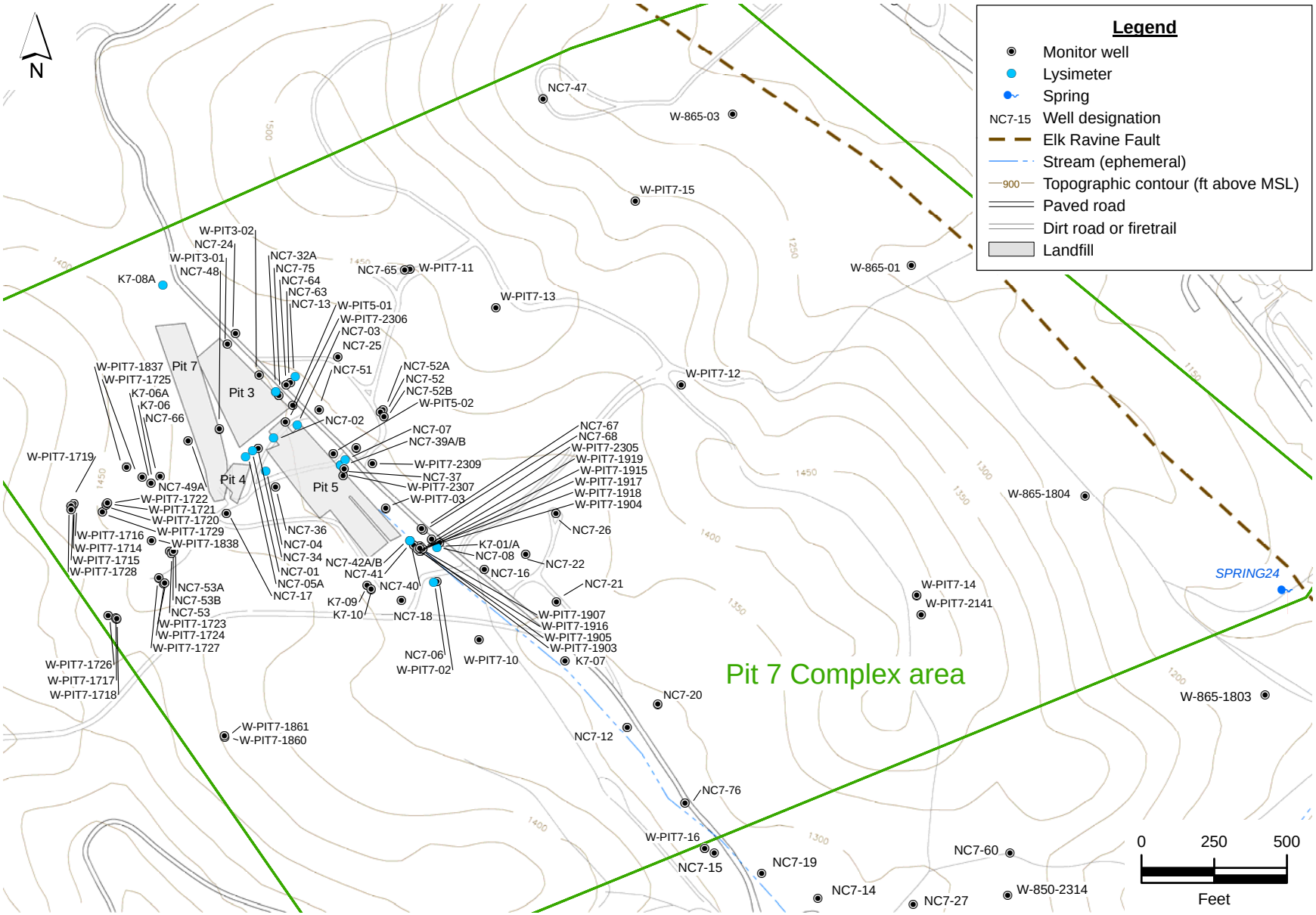

Figure 3. Pit 7 Complex area map showing topography, roads, wells, lysimeters, springs, and landfills.

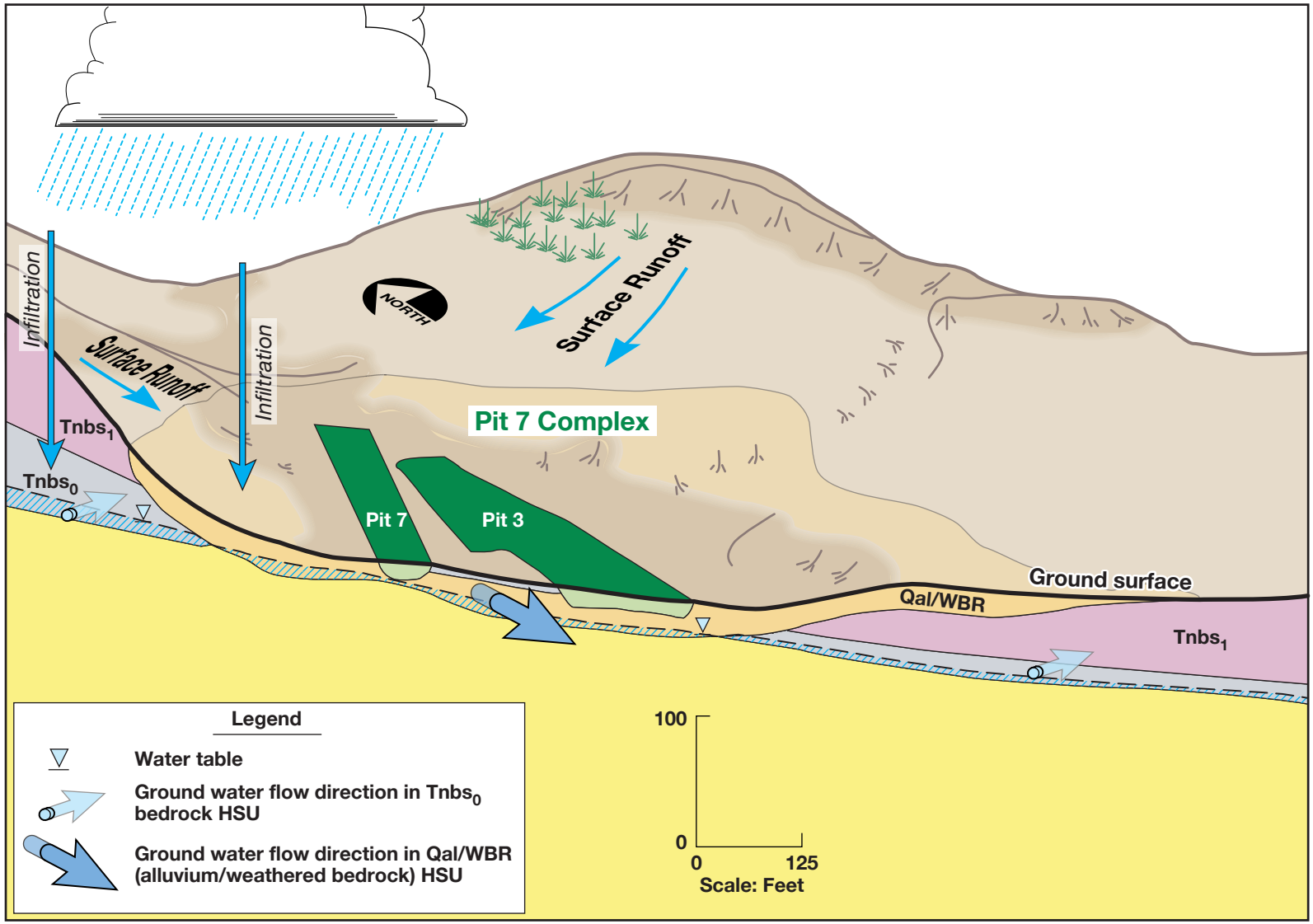

ERD-S3R-07-0099

Figure 4. Conceptual hydrogeological model for the Pit 7 Complex (view is to the northeast).

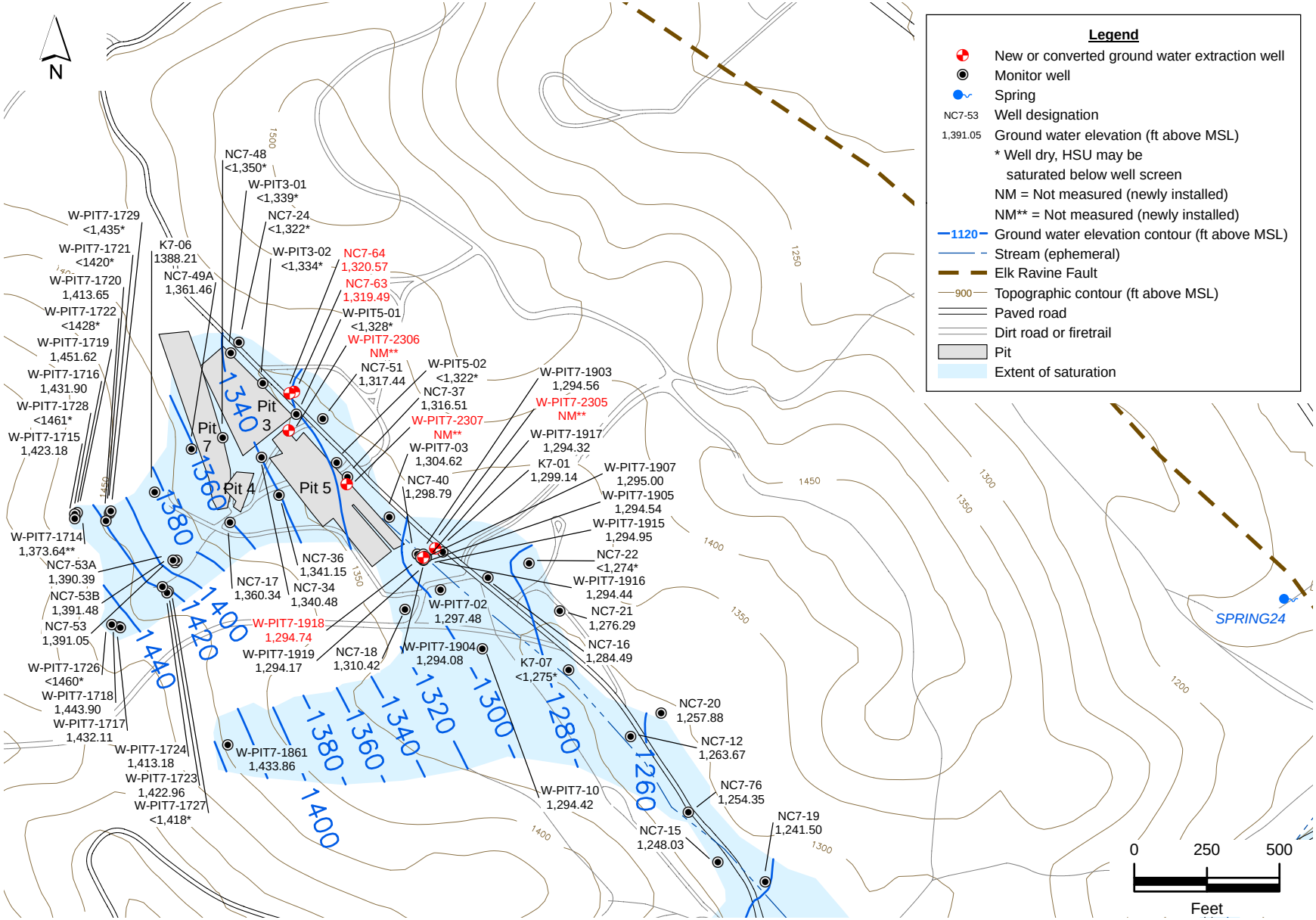

Figure 5. Ground water elevations in the Qal/WBR HSU at the Pit 7 Complex (2006, or most recent data).

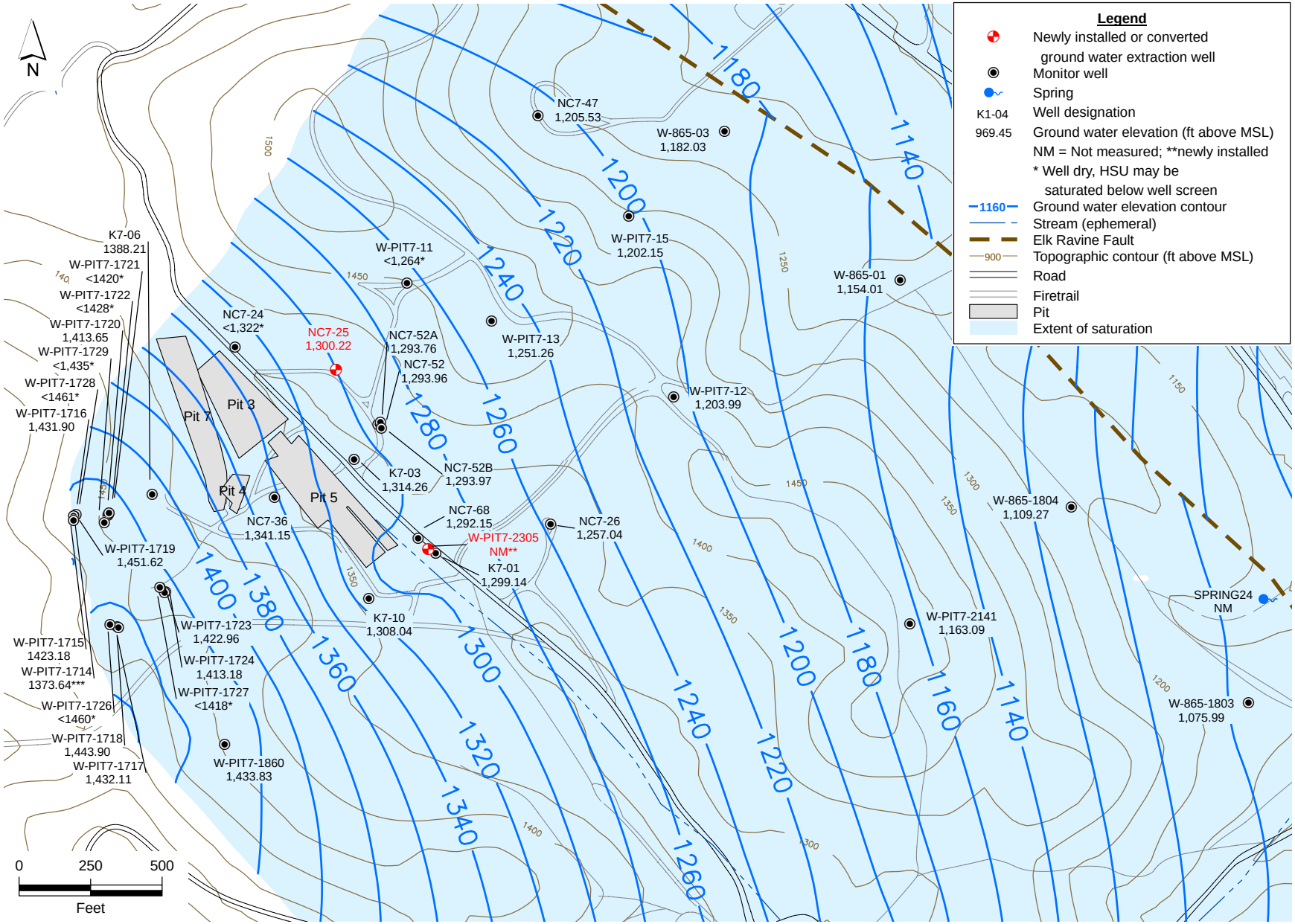

Figure 6. Ground water elevations in $Tnbs_0$ HSU ground water at the Pit 7 Complex (2006, or most recent data).

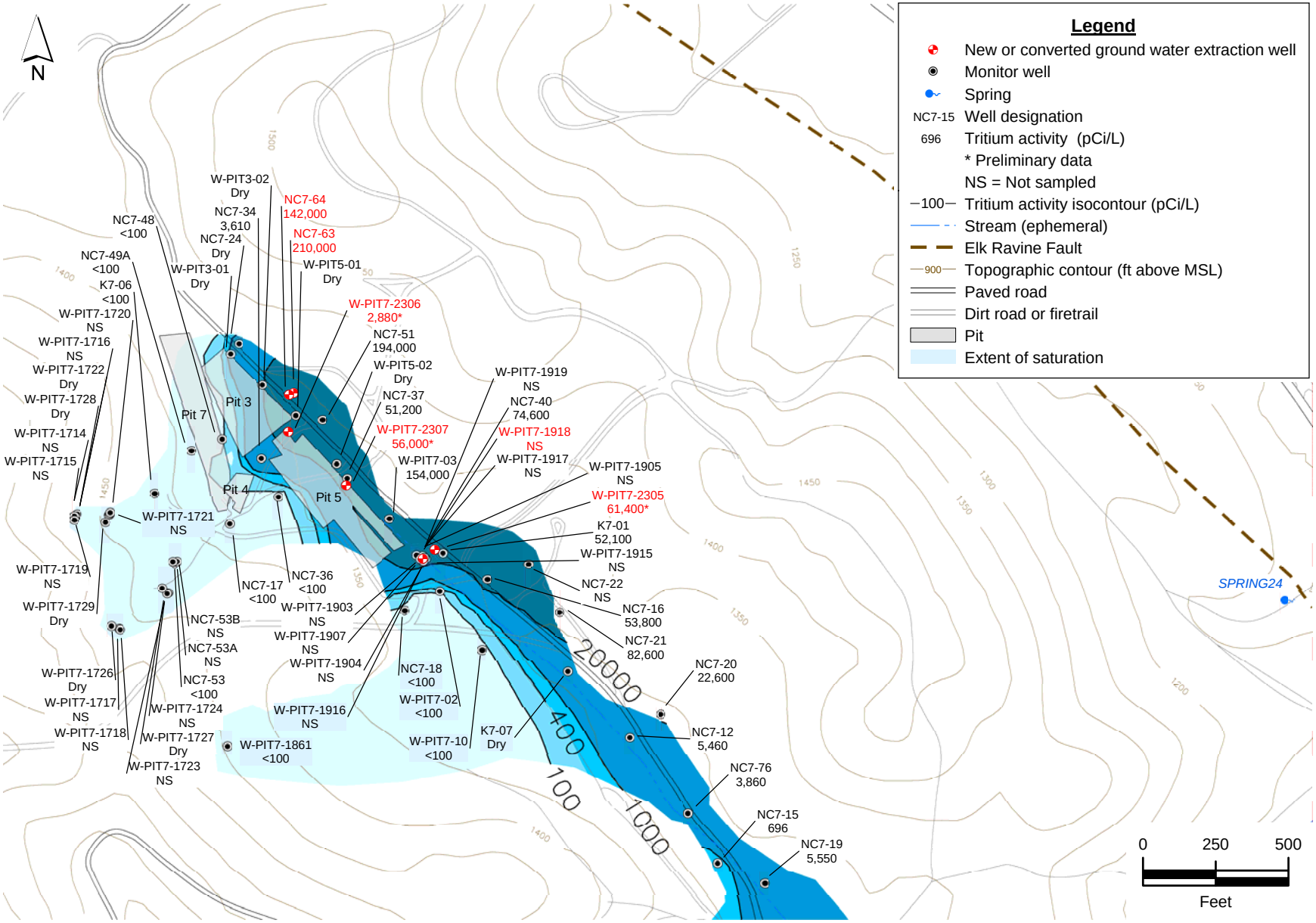

Figure 7. Extent of tritium in Qal/WBR HSU ground water at the Pit 7 Complex (2006, or most recent data).

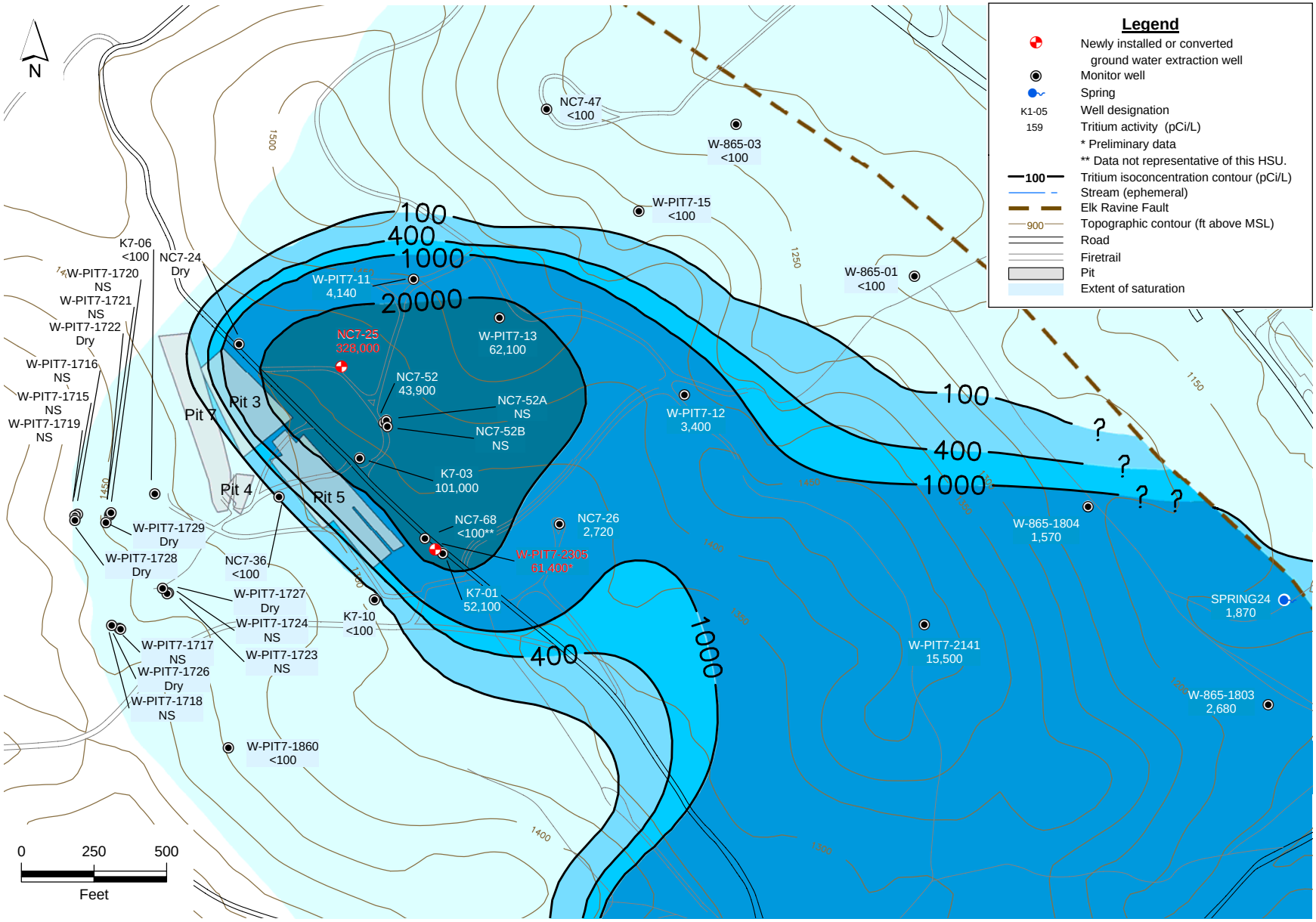

Figure 8. Extent of tritium in $Tnbs_0$ HSU ground water at the Pit 7 Complex (2006, or most recent data).

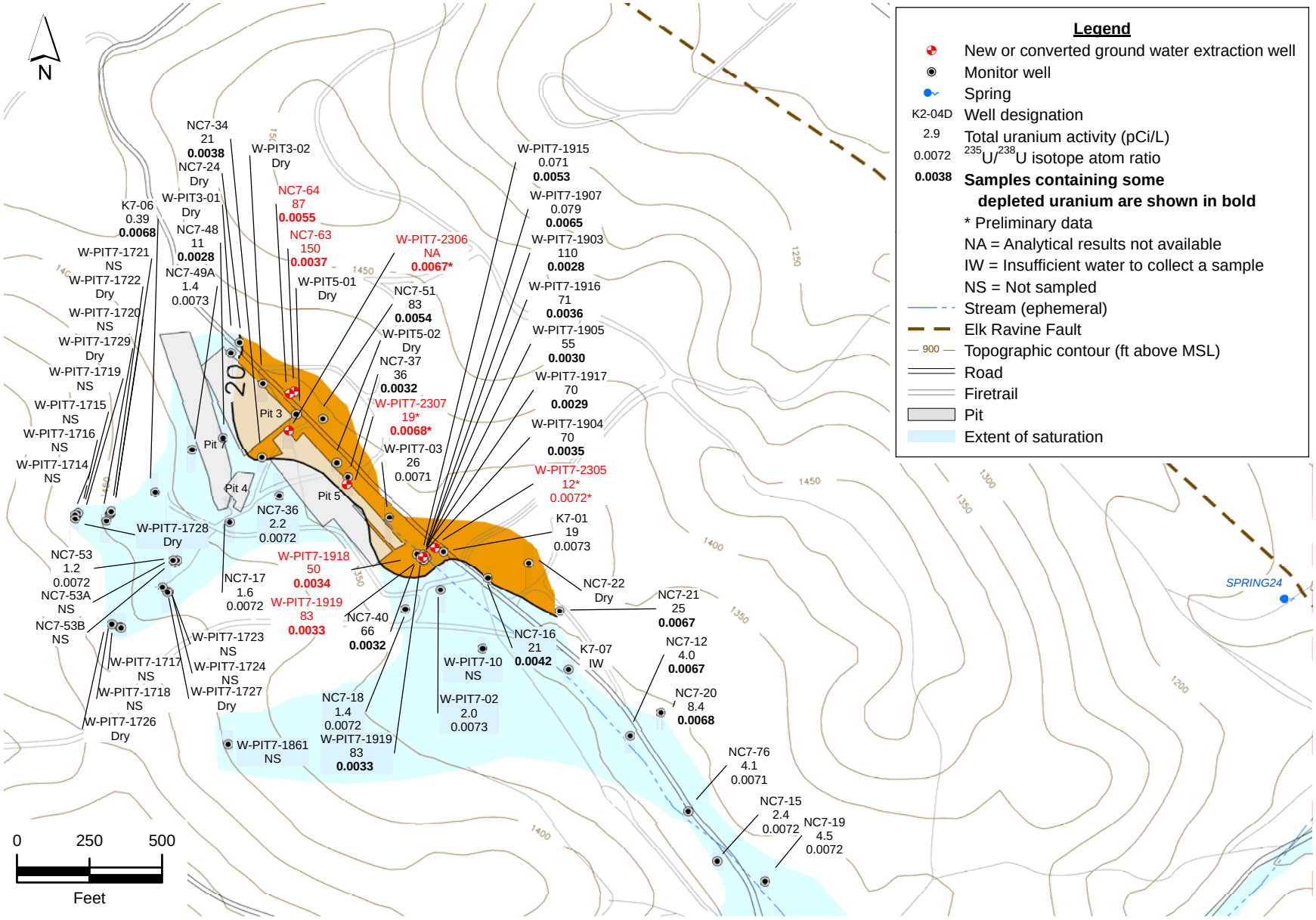

Figure 9. Extent of uranium activities and $^{235}U/^{238}U$ isotope atom ratios in Qal/WBR HSU ground water at the Pit 7 Complex (2006, or most recent data).

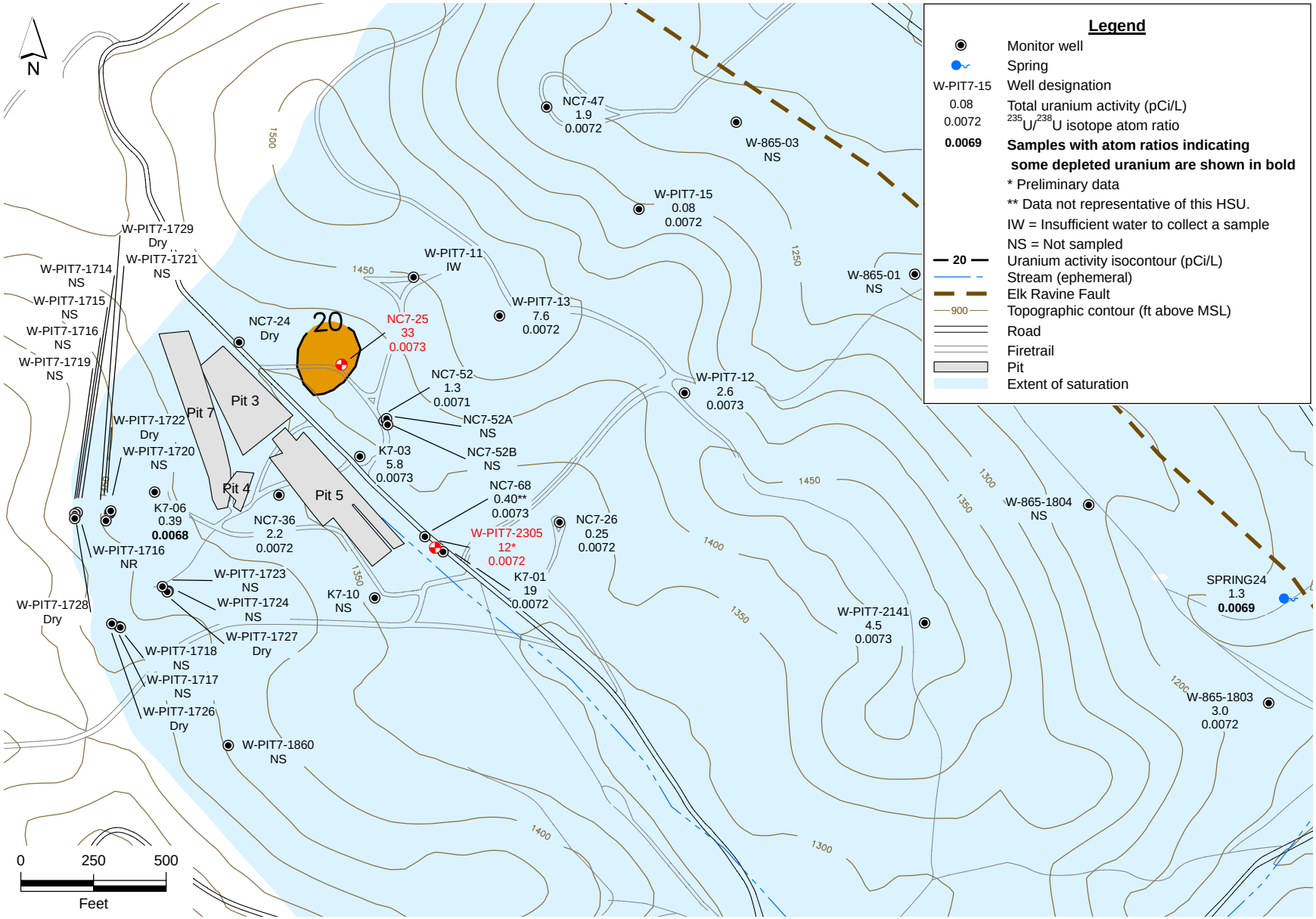

Figure 10. Extent of uranium activities and $^{235}U/^{238}U$ atom ratios for the $Tnbs_0$ HSU ground water at the Pit 7 Complex (2006, or most recent data).

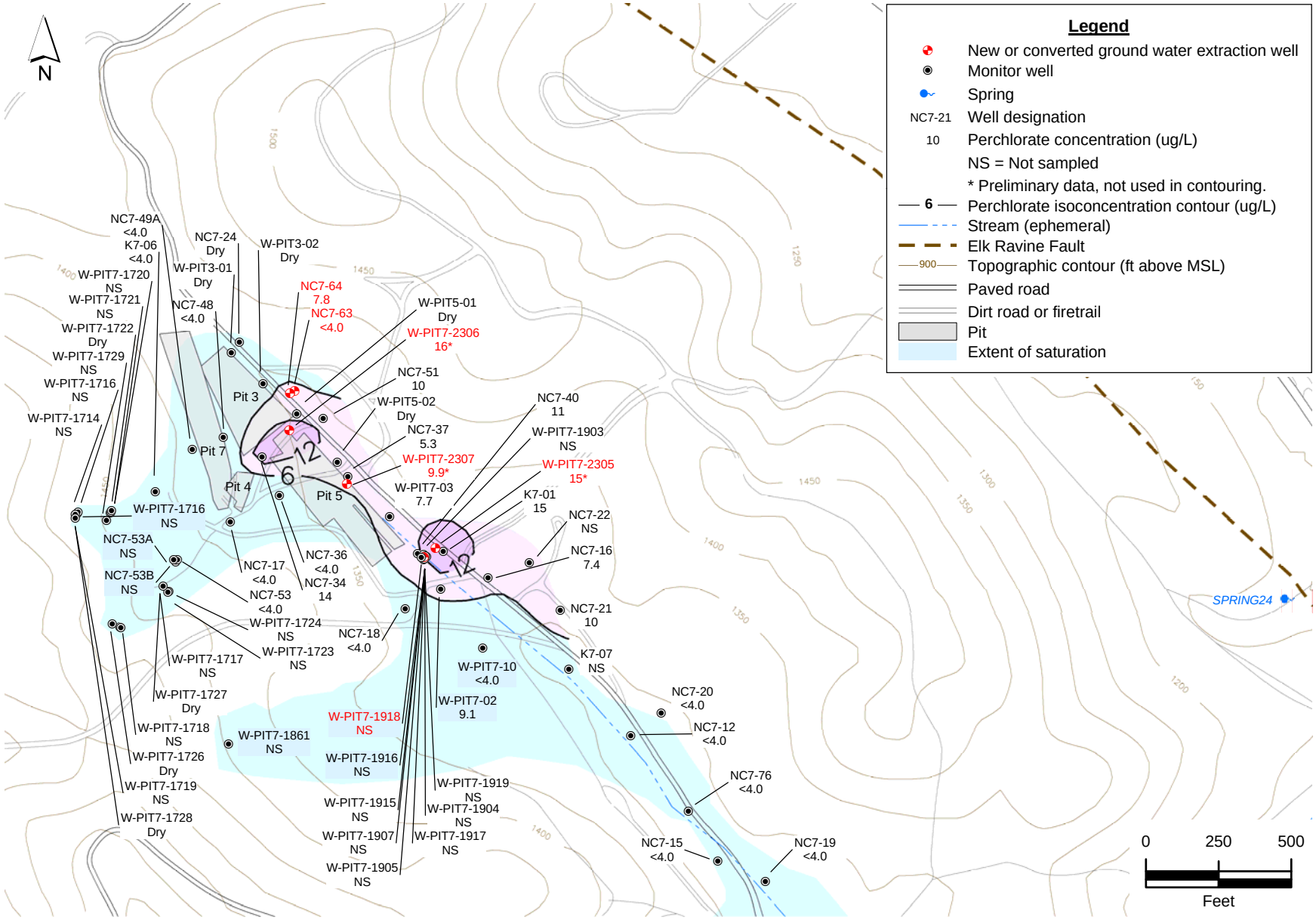

Figure 11. Extent of perchlorate in Qal/WBR HSU ground water at the Pit 7 Complex (2006, or most recent data).

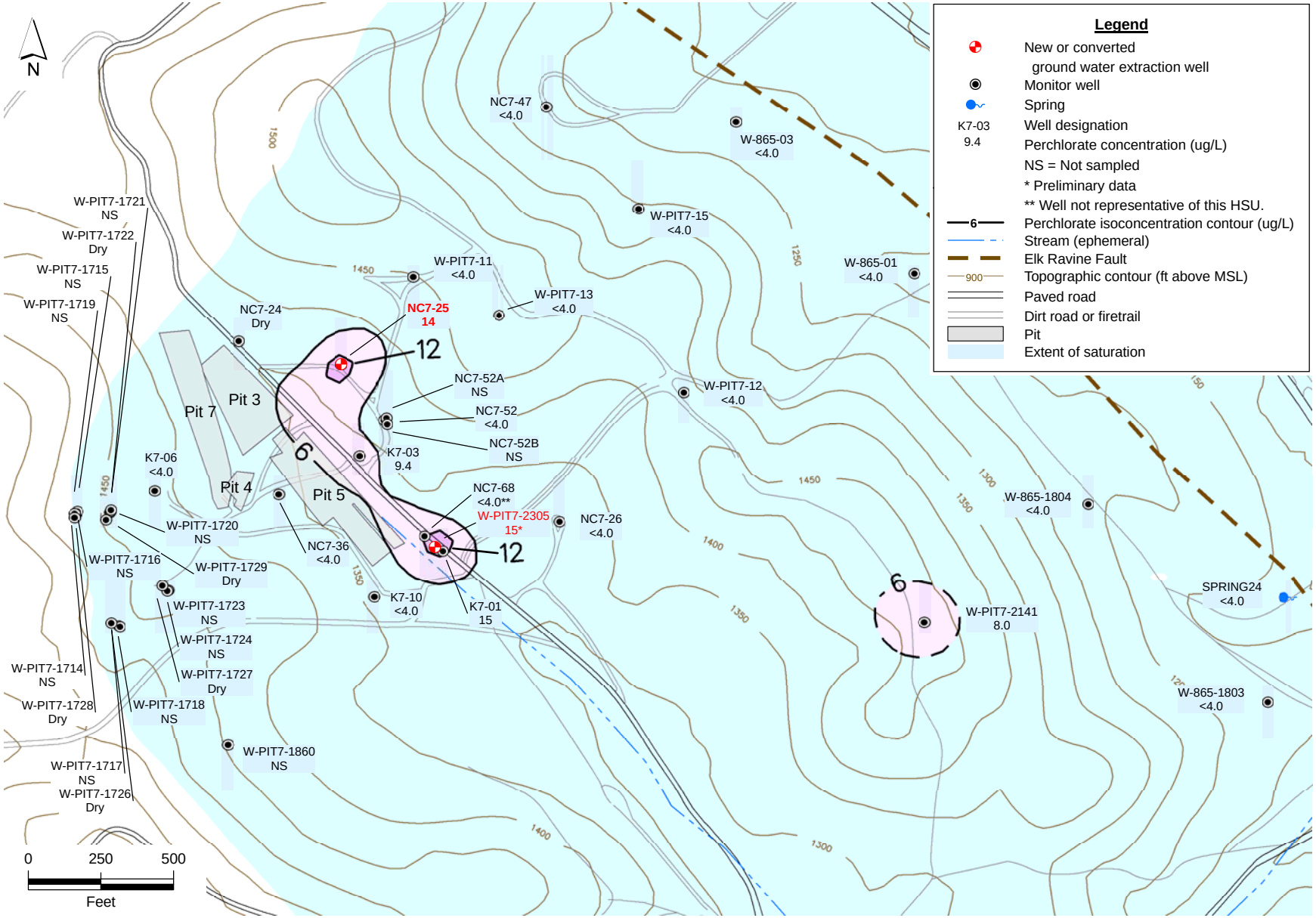

Figure 12. Extent of perchlorate in $Tnbs_0$ HSU ground water at the Pit 7 Complex (2006, or most recent data).

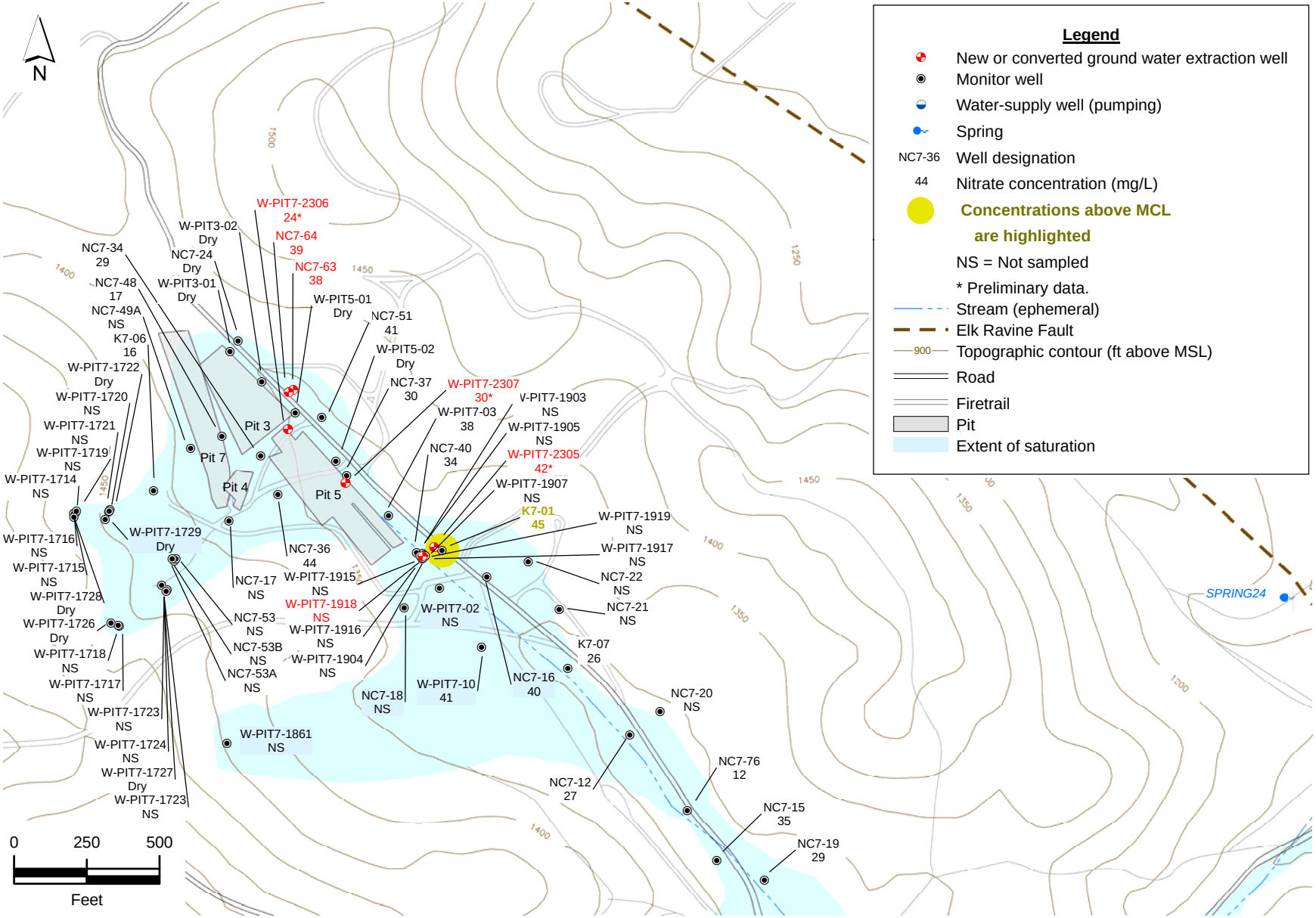

Figure 13. Extent of nitrate in Qal/WBR HSU ground water at the Pit 7 Complex (2006, or most recent data).

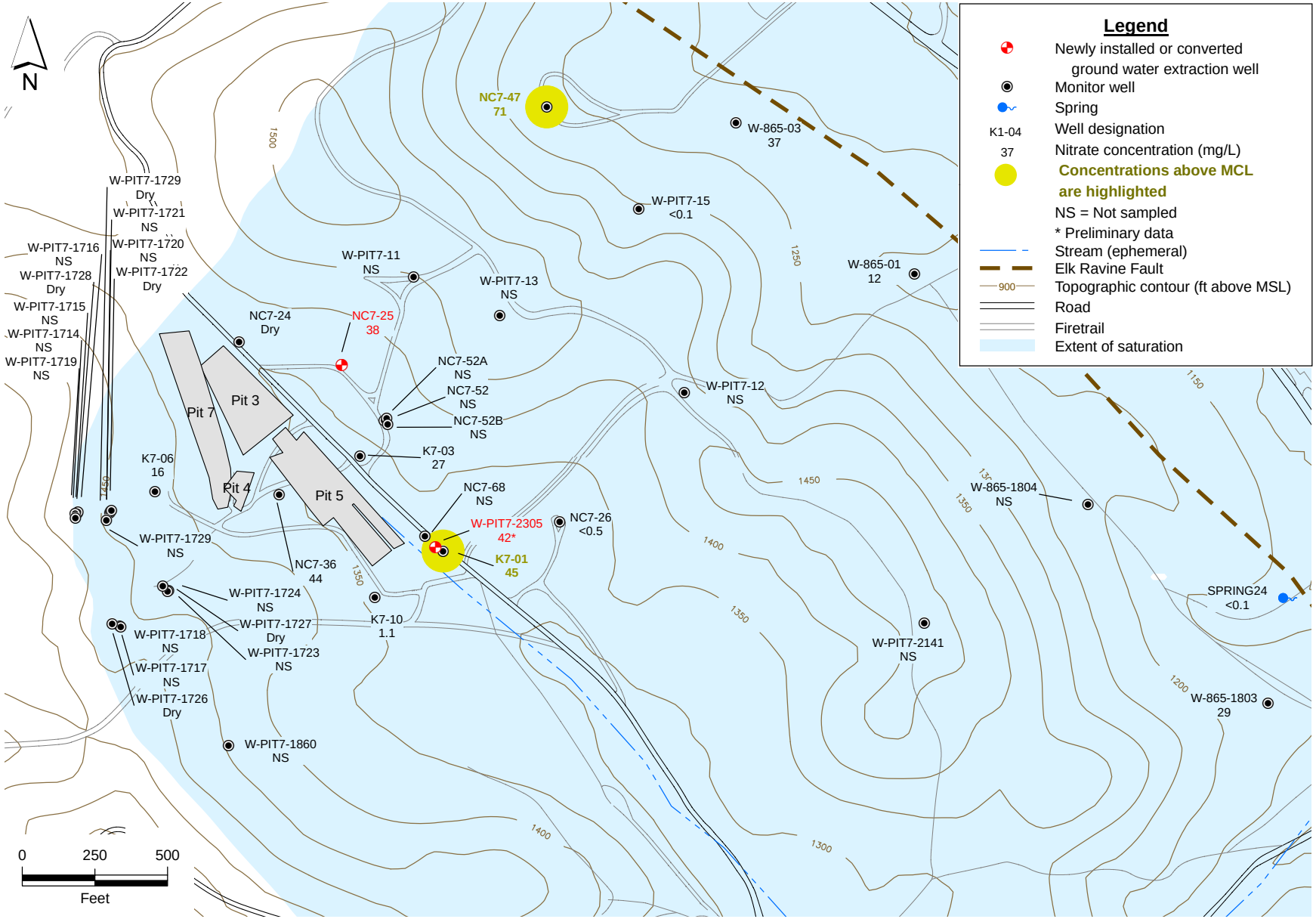

Figure 14. Extent of nitrate in $Tnbs_0$ HSU ground water at the Pit 7 Complex (2006, or most recent data).

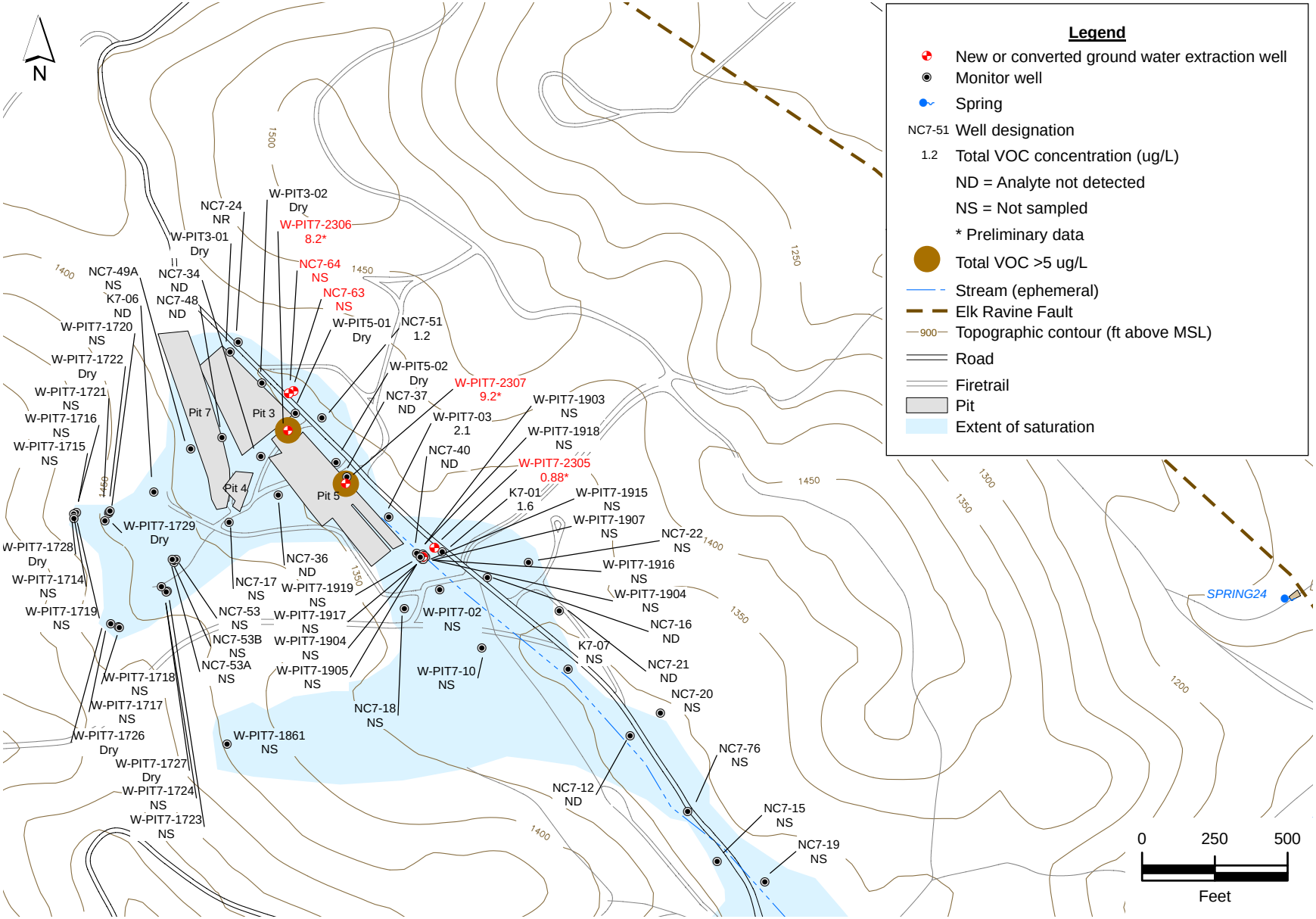

Figure 15. Extent of total VOCs in Qal/WBR HSU ground water at the Pit 7 Complex (2006, or most recent data).

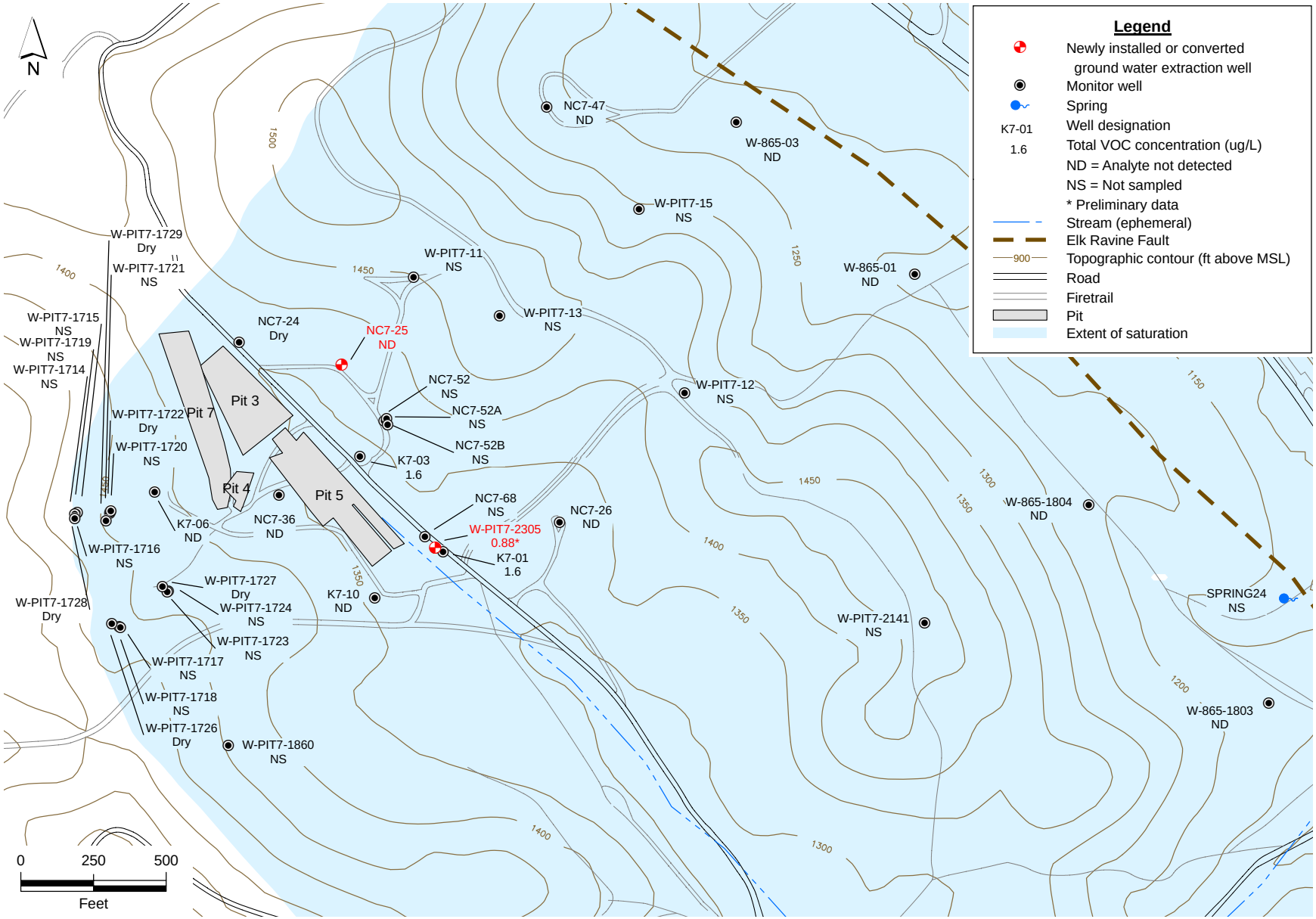

Figure 16. Extent of Total VOC in $Tnbs_0$ HSU ground water at the Pit 7 Complex (2006, or most recent data).

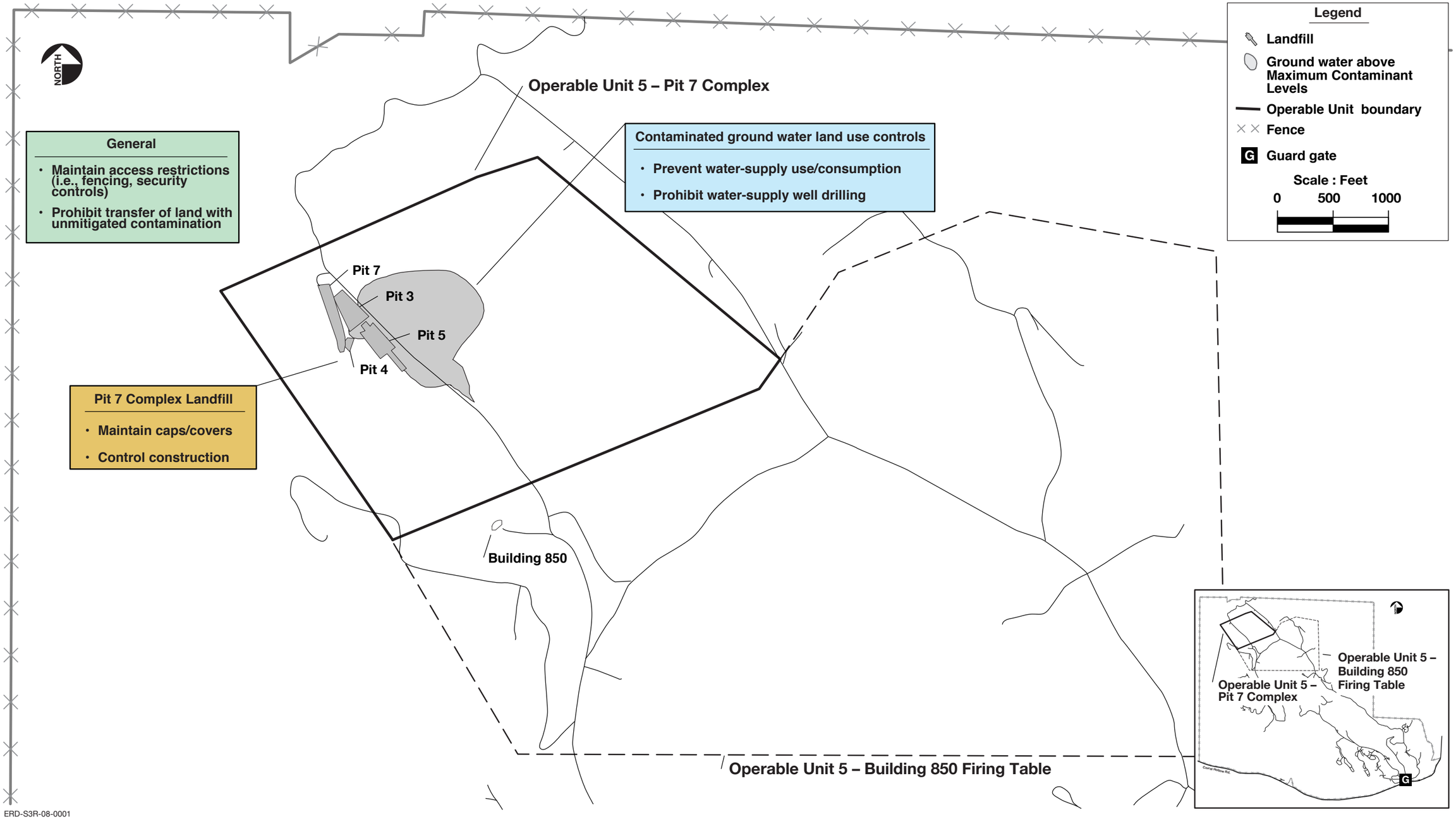

Figure 17. Pit 7 Complex institutional/land use controls.

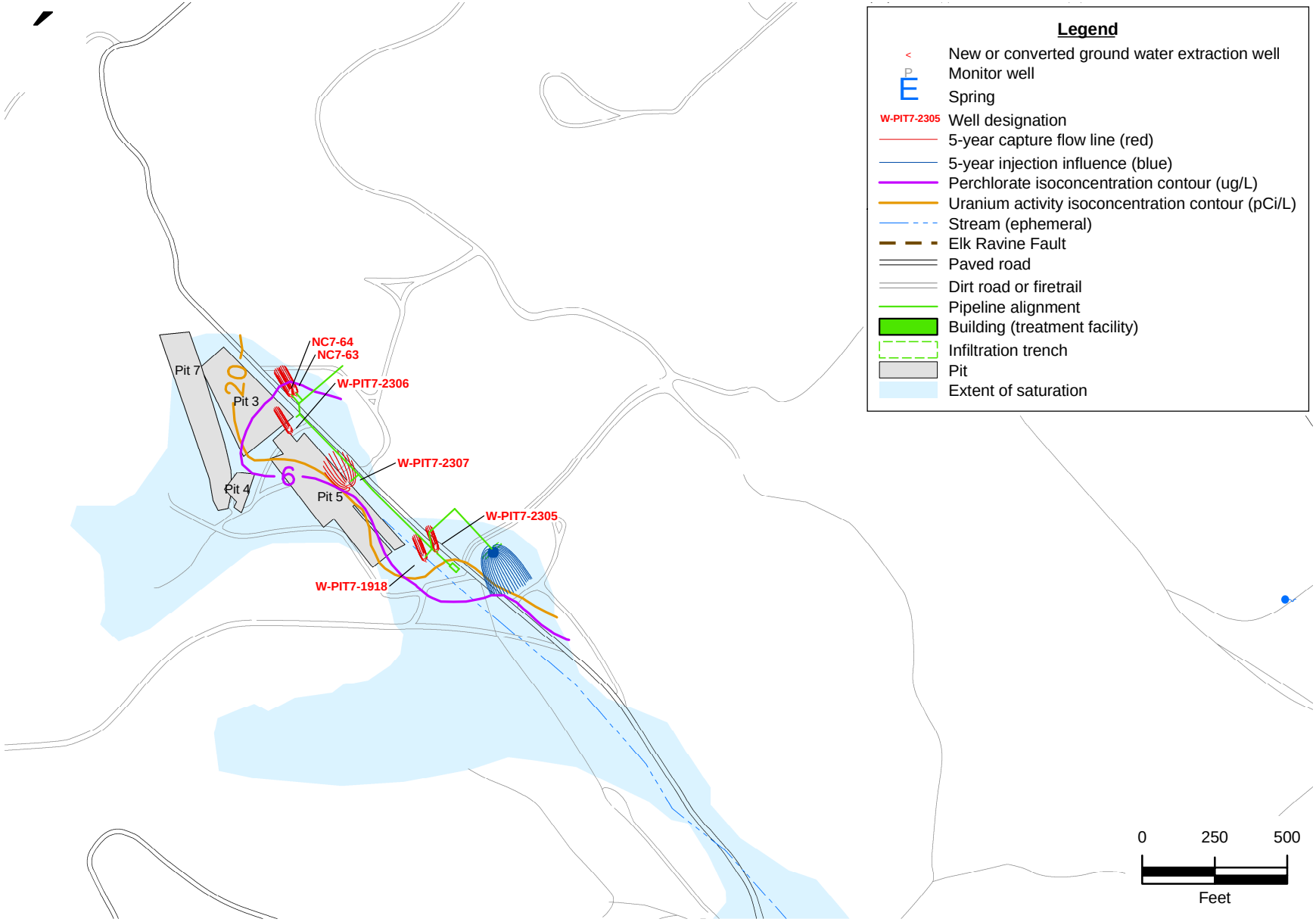

Figure 18. Expected ground water capture zones for the Qal/WBR HSU at the Pit 7 Complex.

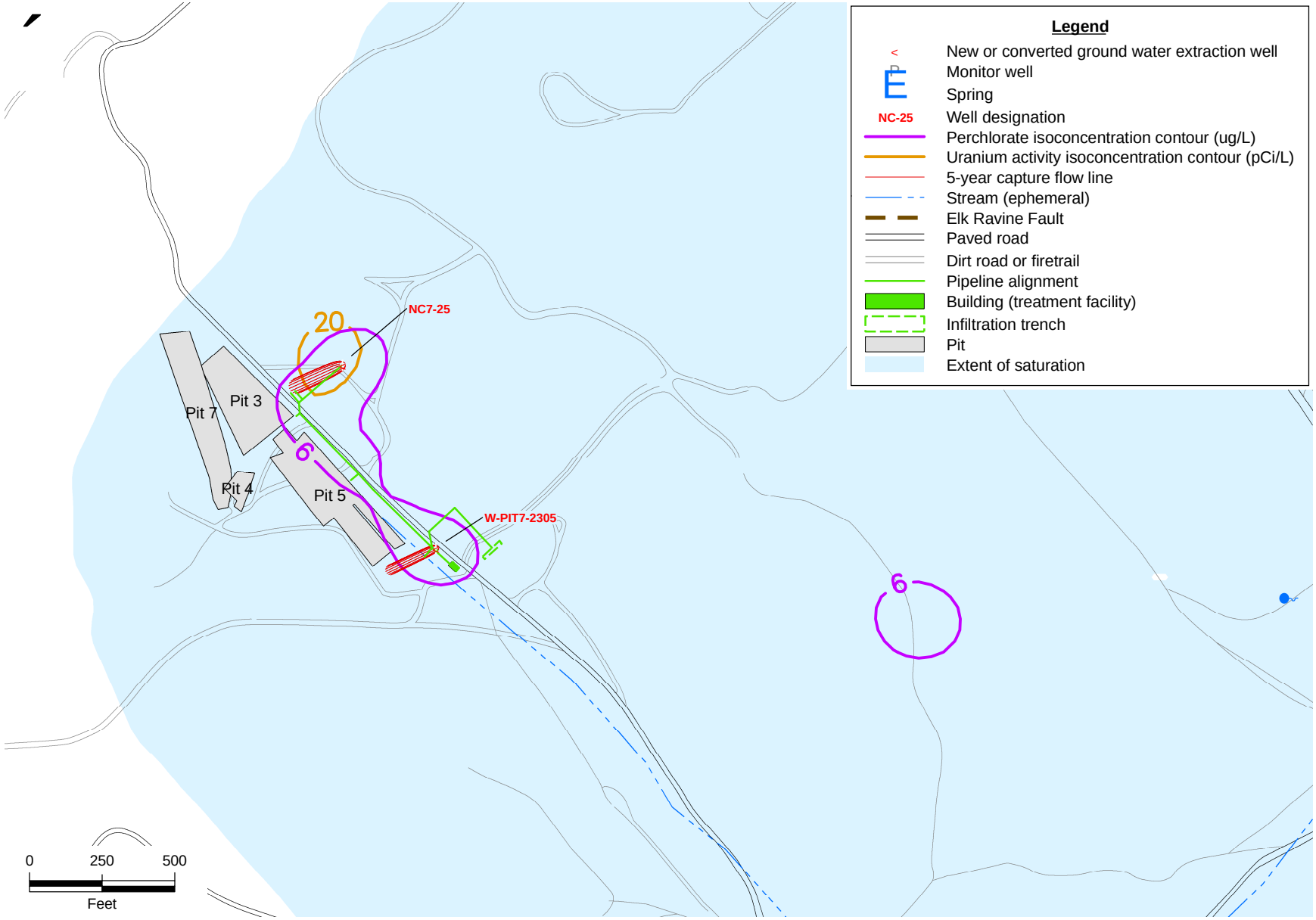

Figure 19. Expected ground water capture zones for the $Tnbs_0$ HSU at the Pit 7 Complex.

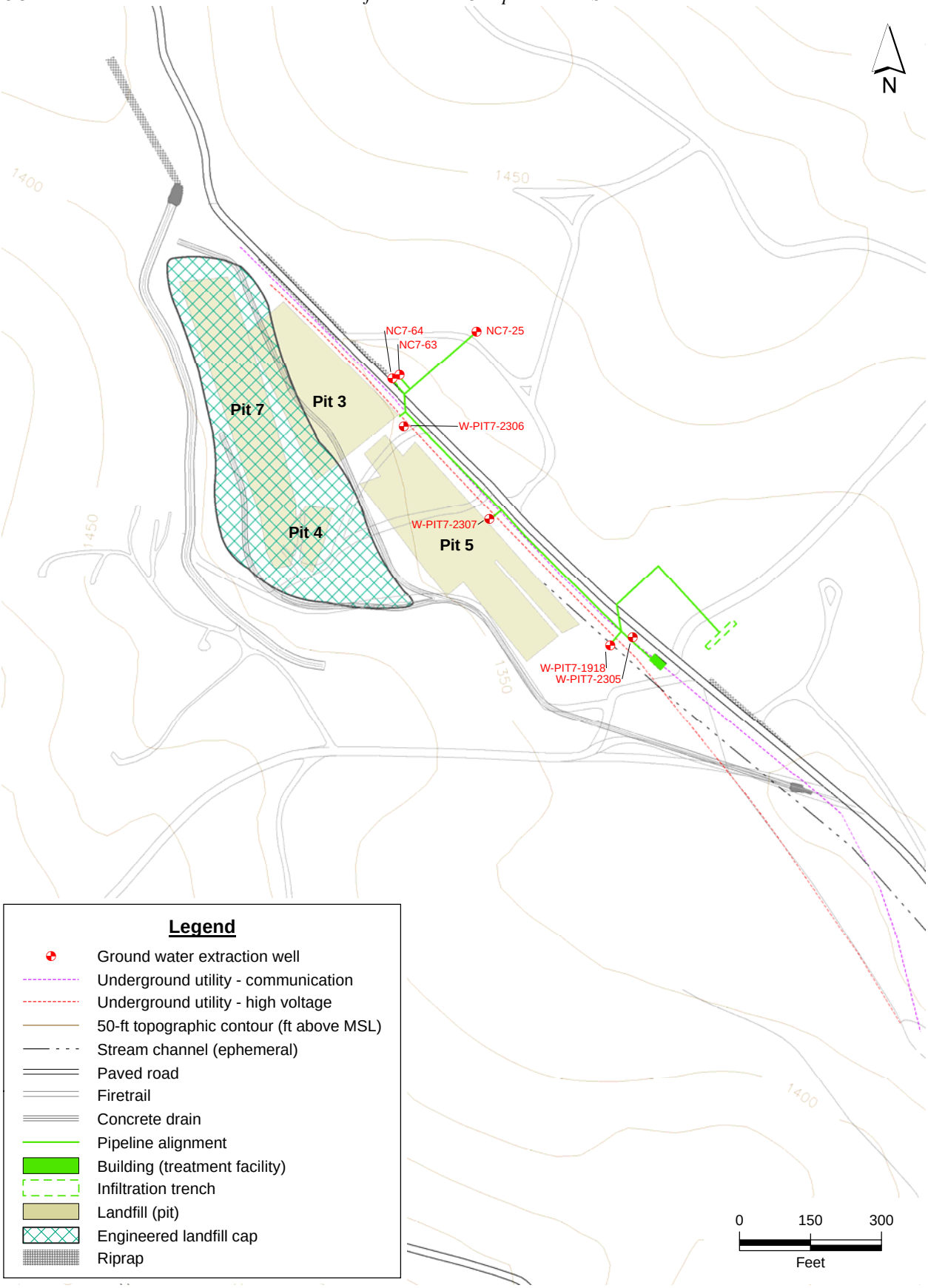

Figure 20. Location of the Pit 7 Complex ground water extraction and treatment system and effluent infiltration trench.

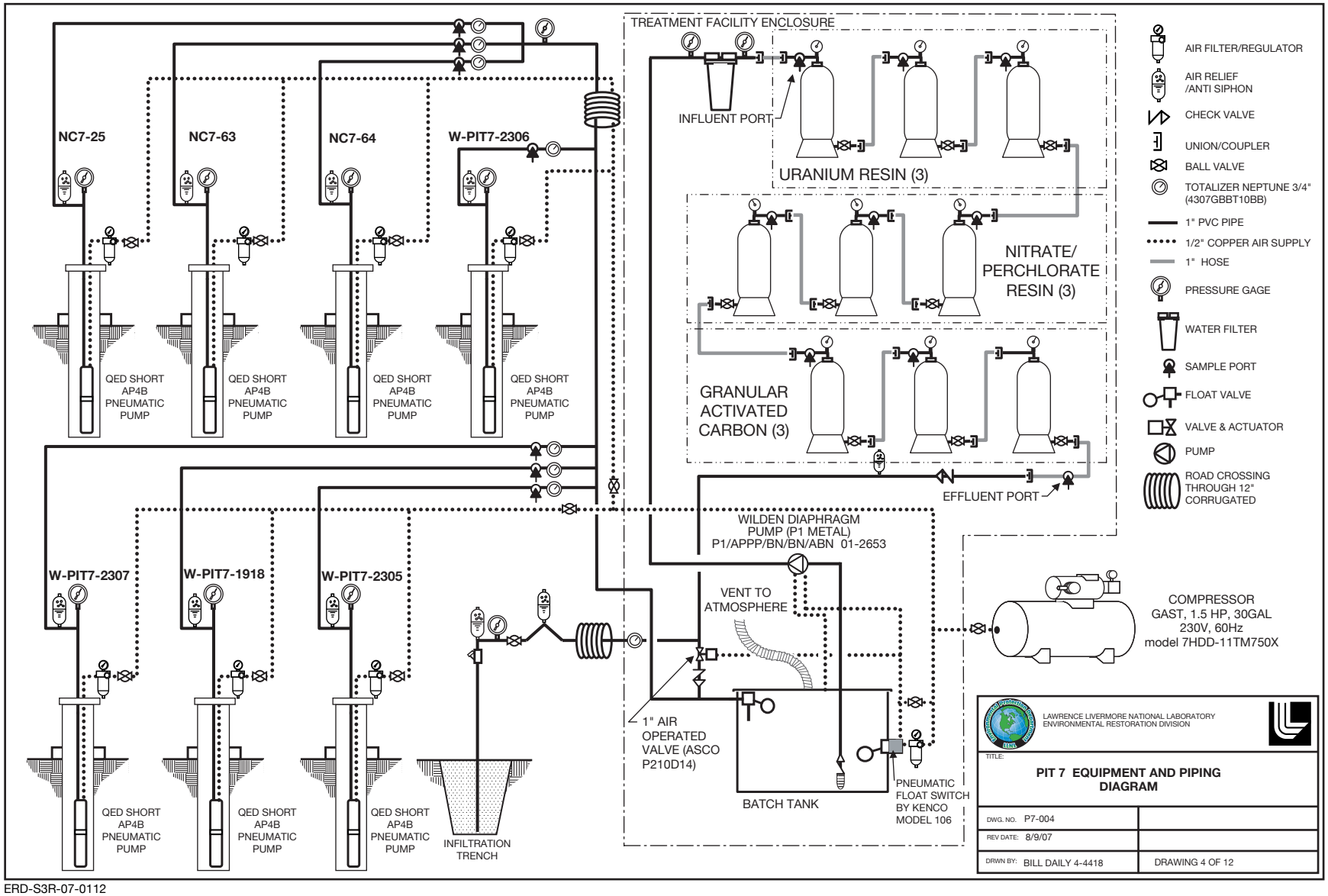

ERD-S3R-07-0112

Figure 21A. Piping and Instrumentation diagram for the Pit 7 Complex ground water extraction and treatment system (equipment and piping diagram).

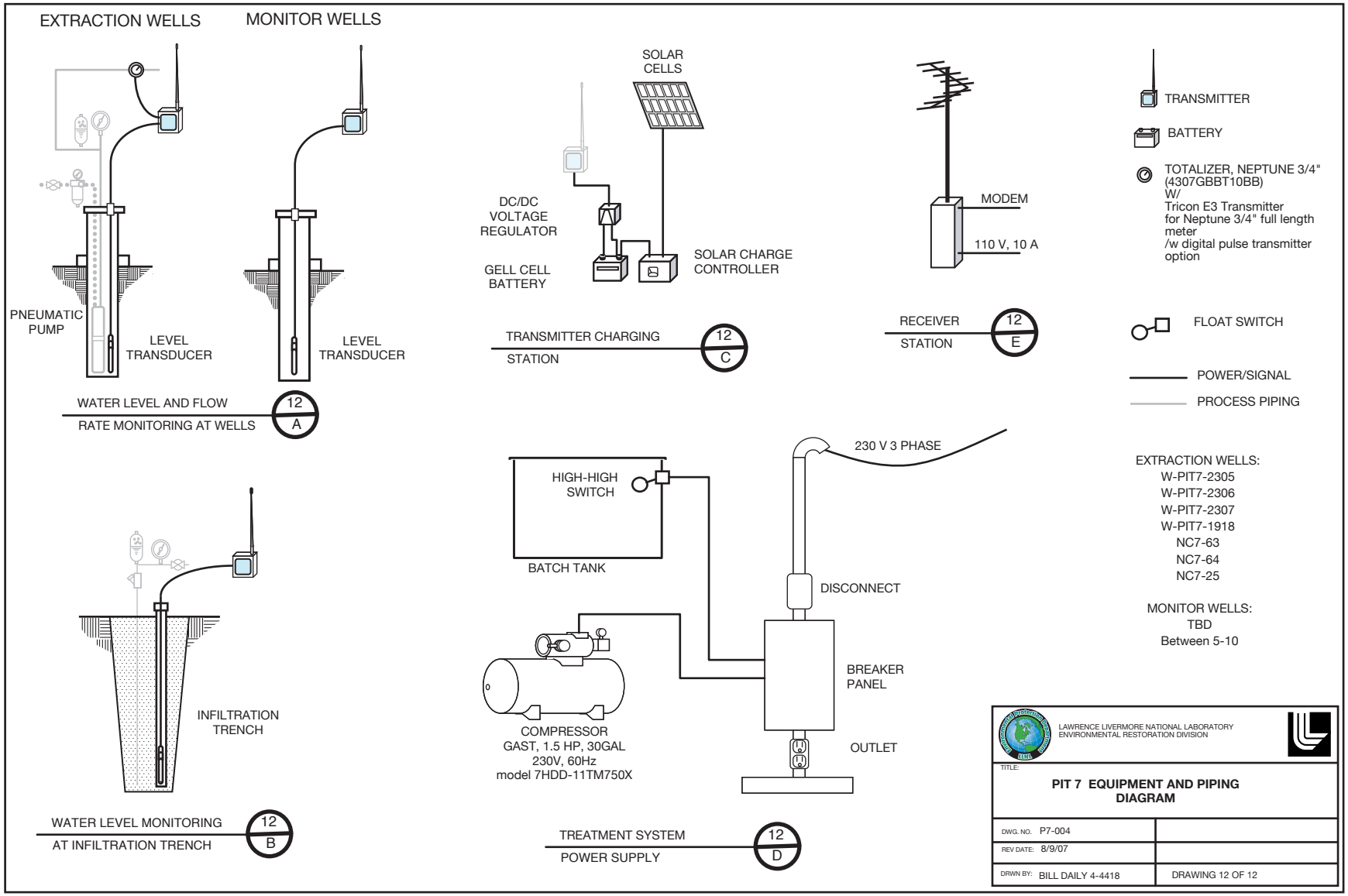

ERD-S3R-07-0113

Figure 21B. Piping and Instrumentation diagram for the Pit 7 Complex ground water extraction and treatment system (electronic and electrical diagram).

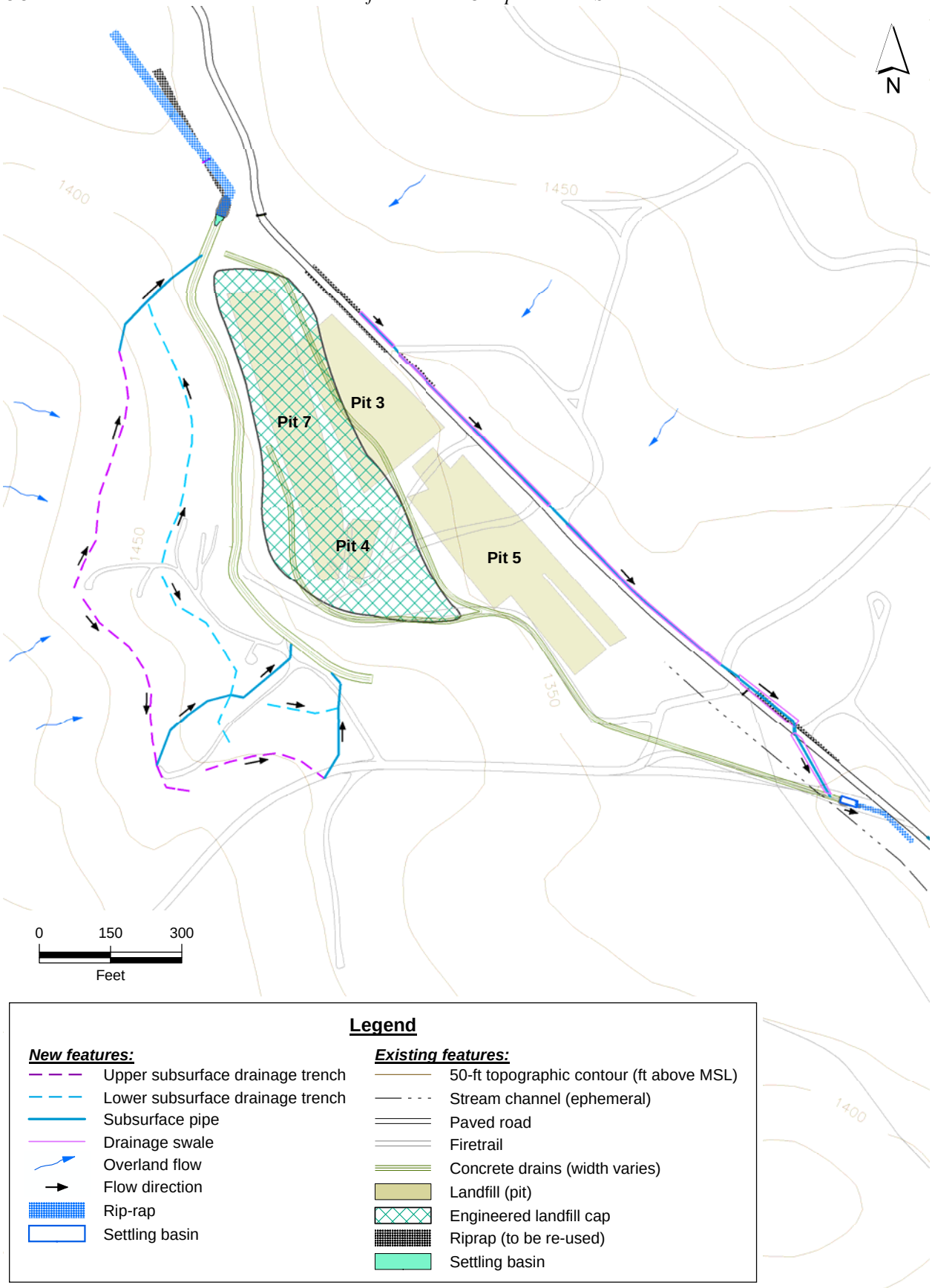

Figure 22. Locations of drainage diversion system components at the Pit 7 Complex.

Tables

Table 1. Description of institutional/land use controls for the Pit 7 Complex.

Institutional/land use control performance objective and duration	Risk necessitating institutional/land use control	Institutional/land use controls and implementation mechanism
Prevent water-supply use/consumption of contaminated ground water until ground water cleanup levels are met.	Uranium, tritium, nitrate, and perchlorate concentrations in ground water exceeding cleanup standards.	There are no existing or planned water-supply wells in the Pit 7 Complex area. Any proposed onsite well drilling activities will be submitted to LLNL Work Induction Board, and reviewed by LLNL Environmental Restoration Project to ensure that new water-supply wells are not located in areas of ground water contamination. Prohibitions on drilling water-supply wells in areas of ground water contamination will be incorporated into the LLNL Site 300 Integrated Strategic Plan or other appropriate institutional planning documents. Contamination is limited to onsite ground water and modeling indicates the plumes will not migrate offsite. Therefore, land use controls are not needed to prevent offsite water-supply use/consumption of contaminated ground water.
Maintain the integrity of Pit 7 Complex landfill covers and the drainage diversion system as long as the pit waste remains in place.	Potential exposure to contaminants in pit waste[a].	DOE will inspect and maintain the landfill covers and the drainage diversion system, and ground water monitoring systems. Landfill cap maintenance and inspection requirements are specified in post-closure plans for the landfills and will be included in the revision to the Site-Wide Compliance Monitoring Plan/Contingency Plan for LLNL Site 300.
Control construction and other ground-breaking activities on the Pit 7 Complex landfills to prevent cap/cover damage and/or inadvertent exposure to pit waste as long as the pit waste remains in place.	Potential exposure to contaminants in pit waste[a].	All proposed ground-breaking construction activities must be cleared through LLNL Work Induction Board and require an excavation permit. The Work Induction Board coordinates with the LLNL Environmental Restoration Project to identify if there is a potential for exposure to contaminants in the proposed construction areas. If a potential for contaminant exposure is identified, the LLNL Site 300 Hazards Control ensures that hazards are adequately evaluated and necessary controls identified and implemented prior to the start of work. The Work Induction Board including the LLNL Environmental Analyst will also work with the Program proposing the construction project to determine if the work plans can be modified to move construction activities outside of areas of contamination. Controls for construction and other ground-breaking activities will be incorporated into the LLNL Site 300 Integrated Strategic Plan or other appropriate institutional planning documents.

Table 1. Description of institutional/land use controls for the Pit 7 Complex. (Continued)

Institutional/land use control performance objective and duration	Risk necessitating institutional/land use control	Institutional/land use controls and implementation mechanism
Control construction and other ground-breaking activities on the Pit 7 Complex landfills to prevent cap/cover damage and/or inadvertent exposure to pit waste as long as the pit waste remains in place. *(continued)*		In addition, health and safety procedures have been developed as part of the Remedial Design Report for the Pit 7 Complex for both construction and long-term maintenance of the remedial action to ensure worker safety and the proper handling of all hazardous materials.
Maintain access restrictions to prevent inadvertent exposure of onsite workers to the pit waste as long as the waste in the Pit 7 Complex Landfills remain in place.	Potential exposure to contaminants in pit waste[a].	There are currently no active facilities located in the vicinity of the Pit 7 Complex. Signage is in place and will be maintained at the Pit 7 Landfill Complex access points prohibiting unauthorized access and requiring notification and authorization by LLNL Site 300 Management to enter, dig, excavate, or otherwise disturb soil or vegetation in this area (see administrative controls for ground-breaking construction activities above). These access restrictions will be incorporated into the LLNL Site 300 Integrated Strategic Plan or other appropriate institutional planning documents.
Maintain access restrictions and activities at the Pit 3 Landfill to prevent onsite site worker inhalation exposure to tritium until annual risk re-evaluation indicates that the risk is less than 10^{-6}.	A 4×10^{-6} risk to onsite workers was identified from inhalation of tritium volatilizing from subsurface soil in the vicinity of the Pit 3 Landfill.	There are currently no active facilities located in the vicinity of the Pit 7 Complex, and the Pit 3 Landfill was closed and covered with native soil fill in 1967. Current activities in the vicinity of the Pit 3 Landfill are restricted to quarterly sampling of monitor wells. The time spent sampling is well below the exposure scenario for which the unacceptable exposure risk was calculated, which assumed a worker would spend 8 hours a day, five days a week for 25 years working at the Pit 3 Landfill. Any significant changes in activities conducted in the vicinity of the Pit 3 Landfill must be cleared through LLNL Work Induction Board. The Work Induction Board coordinates with the LLNL Environmental Restoration Project to identify if there is a potential for exposure to contaminants as a result of the proposed area usage. If a potential for

Table 1. Description of institutional/land use controls for the Pit 7 Complex. (Continued)

Institutional/land use control performance objective and duration	Risk necessitating institutional/land use control	Institutional/land use controls and implementation mechanism
Maintain access restrictions and activities at the Pit 3 Landfill to prevent onsite site worker inhalation exposure to tritium until annual risk re-evaluation indicates that the risk is less than 10^{-6}. *(continued)*		contaminant exposure is identified as a result of these changes in activities or area use, the LLNL Site 300 Hazards Control is notified and determines any necessary personal protective equipment or engineered control requirements to prevent exposure. Signage is in place and will be maintained at the Pit 7 Landfill Complex access points prohibiting unauthorized access and requiring notification and authorization by LLNL Site 300 Management to enter, dig, excavate, or otherwise disturb soil or vegetation in this area. All ground-breaking construction activities must be cleared through LLNL Work Induction Board and require an excavation permit. The Work Induction Board coordinates with the LLNL Environmental Restoration Project to identify if there is a potential for exposure to contaminants in the proposed construction areas. If a potential for contaminant exposure is identified, the LLNL Site 300 Hazards Control is notified and provides project hazard control requirements to prevent exposure during construction. These access restrictions will be incorporated into the LLNL Site 300 Integrated Strategic Plan or other appropriate institutional planning documents. DOE will conduct annual risk re-evaluations to determine when the tritium inhalation risk at the Pit 3 Landfill has been mitigated. The risk re-evaluations mechanism, methodology, and frequency will be documented in the Remedial Design Report for the Pit 7 Complex.
Prohibit transfer of lands at Site 300 with unmitigated contamination that could cause potential harm under residential or unrestricted land use.	Potential exposure to contaminated waste and/or environmental media.	The Site 300 Federal Facility Agreement contains provisions that assure that DOE will not transfer lands with unmitigated contamination that could cause potential harm (as described in Section 2.8.2). In the event that the Site 300 property is transferred in the future, DOE will execute a land use covenant at the time of transfer in compliance with Title 22 California Code of Regulations, Division 4.5, Chapter 39, Section 67391.1. Development will be restricted to industrial land usage. These restrictions will remain in place until and unless a risk assessment is performed in accordance with then current U.S. EPA risk assessment guidance and is agreed by the DOE, the U.S. EPA, DTSC, and the RWQCB as adequately showing no unacceptable risk for residential or unrestricted land use. These restrictions will be incorporated into the LLNL Site 300 Integrated Strategic Plan or other appropriate institutional planning document.

Notes appear on the following page.

Table 1. Description of institutional/land use controls for the Pit 7 Complex. (Continued)

Notes:

DOE = **United States Department of Energy.**

DTSC = **California Department of Toxic Substances Control.**

LLNL = **Lawrence Livermore National Laboratory.**

RWQCB = **California Regional Water Quality Control Board.**

U.S. EPA = **United States Environmental Protection Agency.**

[a] **A risk for exposure to contaminants in the pit waste could not be calculated due to safety restrictions on penetrating landfill waste. Land use controls based on the potential exposure to contaminants in pit waste conservatively assume that the waste contaminants may pose a risk to human health.**

Table 2. Summary of hydraulic test data for the Pit 7 Complex.[a]

Well ID	HSU	Date	Type of test[b]	Flow rate (Q) (gpm)	Transmissivity (T) (gpd/ft)	Hydraulic conductivity (K)[c] (gpd/sq ft)	Data quality[d]
NC7-25	$Tnbs_0$	7/10/2007	Drawdown	<0.1	NS	NS	Poor
W-PIT7-1918	Qal/WBR	7/5/2007	Drawdown	<0.1	NS	NS	Poor
NC7-63	Qal/WBR	6/27/2007	Drawdown	<0.1	NS	NS	Poor
NC7-64	Qal/WBR	6/26/2007	Drawdown	<0.1	NS	NS	Poor
W-PIT7-2305	Qal/WBR & $Tnbs_0$	6/21/2007	Drawdown	<0.1	NS	NS	Poor
W-PIT7-2307	Qal/WBR	6/19/2007	Drawdown	0.75	NS	NS	Poor
W-PIT7-2306	Qal/WBR	6/11/2007	Drawdown	<0.1	NS	NS	Poor
K7-10	$Tnbs_0$	3/14/1989	Slug/Bail	NA	2.7 - 6.9	0.55 - 1.4	Fair - Excellent
NC7-17	Qal/WBR	3/14/1989	Slug/Bail	NA	5.3 - 6.6	1 - 1.3	Fair - Excellent
K7-09	$Tnsc_0$	3/3/1989	Slug/Bail	NA	1.5 - 3.8	0.3 - 0.76	Good
K7-03	$Tnbs_0$	1/9/1987	Slug/Bail	NA	37 - 42	3.6 - 4.7	Poor
K7-06	$Tnsc_0$	1/9/1987	Bail	NA	36	2.1	-
K7-03	$Tnbs_0$	1/8/1987	Drawdown	0.11	44	4.4	-
K7-06	$Tnsc_0$	1/7/1987	Slug	NA	65	3.6	-
K7-01	Qal/WBR & $Tnbs_0$	12/10/1986	Bail	NA	27	4.4	Fair
K7-01	Qal/WBR & $Tnbs_0$	12/9/1986	Slug	NA	110	14	Good
NC7-25	$Tnbs_0$	12/9/1986	Slug/Bail	NA	11-13	2.8 - 3.4	-
K7-01	Qal/WBR & $Tnbs_0$	12/8/1986	Drawdown	0.25	24 - 39	4 - 6.2	-
K7-01	Qal/WBR & $Tnbs_0$	12/5/1986	Drawdown	0.11	25	4.2	-
K7-03	$Tnbs_0$	12/3/1986	Drawdown	0.22	36 - 38	3.6 - 3.8	-
NC7-26	$Tnbs_0$	12/3/1986	Drawdown	0.33	150	28	-
NC7-26	$Tnbs_0$	12/3/1986	Slug/Bail	NA	372 - 374	34 - 35	-
NC7-26	$Tnbs_0$	12/2/1986	Drawdown	0.22	270	55	-
NC7-26	$Tnbs_0$	12/2/1986	Drawdown	0.35	210 - 750	42 - 150	-

Table 2. Summary of hydraulic test data for the Pit 7 Complex.[a] (Page 2 of 3)

Well ID	HSU	Date	Type of test[b]	Flow rate (Q) (gpm)	Transmissivity (T) (gpd/ft)	Hydraulic conductivity (K)c (gpd/sq ft)	Data quality[d]
NC7-25	$Tnbs_0$	9/9/1986	Drawdown	0.001	2.2	0.68	-
NC7-49	Qal/WBR	6/18/1986	Slug/Bail	NA	2.1 - 4.7	0.21 - 0.47	-
NC7-49	Qal/WBR	5/9/1986	Bail	NA	8.1	0.81	-
NC7-48	Qal/WBR	5/8/1986	Slug/Bail	NA	2.5 - 3.1	0.25 - 0.31	-
NC7-16	Qal/WBR	1985	Bail	NA	2.9 - 270	1.3 - 121	-
NC7-25	$Tnbs_0$	1985	Slug	NA	1.2 - 19	0.19 - 3	-
NC7-26	$Tnbs_0$	1985	Slug	NA	26 - 370	2.1 - 30	-

Notes:

gpd/sq ft = Gallons per day per square feet.
gpm = Gallons per minute.
HSU = Hydrostratigraphic unit.
NA = Not applicable.
NS = Not suitable for analysis.
Qal/WBR = Quaternary alluvium.
$Tnbs_0$ = Lowermost unit of the Miocene Lower Neroly sandstone.

[a] The pumping test results were obtained by using the analytic techniques of Theis (1935) and Cooper and Jacob (1946). The particular method used depends on the character of the data obtained. The slug/bail test results were obtained using the method of Cooper et al. (1967) (See references below).

[b] "Drawdown" denotes 1-hr pumping tests, and "Slug/Bail" denotes monitoring and recovery after an instantaneous change in ground water elevations.

[c] K is calculated by dividing T by the thickness of permeable sediments intercepted by the sand pack of the well. This thickness is the sum of all sediments with moderate to high estimated conductivities determined from the geologic and geophysical logs of the well.

[d]Data Quality

Excellent High confidence that type curve match is unique. Data are smooth and flow rate well controlled.

Good Some confidence that curve match is unique. Data are not too "noisy." Well bore storage effects, if present, do not significantly interfere with the curve match. Boundary effects can be separated from properties of the pumped zone.

Fair Low confidence that curve match is unique. Data are "noisy." Multiple leakiness and other boundary effects tend to obscure the curve match.

Poor Unique curve match cannot be obtained due to multiple boundaries, well bore storage, uneven flow rate, or equipment problems. Usually, the test is repeated.

Table 2. Summary of hydraulic test data for the Pit 7 Complex.[a] (Page 3 of 3)

References

Cooper, H., Jr., J.D. Bredehoeft, and I.S. Papadopulos (1967), "Response of a Finite-Diameter Well to an Instantaneous Charge of Water," *Water Resour. Res.* 3, 263–269.

Cooper, H., and C.E. Jacob (1946), "A Generalized Graphical Method of Evaluating Formation Constants and Summarizing Well Field History," *Am. Geophys. Union Trans.* 27, 526–534.

Theis, C. (1935), "The Relation Between the Lowering of the Piezometric Surface and the Rate and Duration of Discharge of a Well Using Ground-Water Storage," *Am. Geophys. Union Trans.* 16, 519–524.

Table 3. Parameters used in the WinFlow and mixed tank model.

HSU	Hydraulic conductivity (ft/day)	Average HSU thickness (ft)	Gradient (ft/ft)	Flow direction
Qal/WBR	1.4	15	0.05	South-southeast
$Tnbs_0$	0.14	13	0.09	East-northeast

Notes:

ft = Feet.

HSU = Hydrostratigraphic unit.

Qal/WBR = Quaternary alluvium/weathered bedrock.

$Tnbs_0$ = Lowermost unit of the Miocene Lower Neroly sandstone.

Table 4. Design specifications for the Pit 7 Complex ground water extraction wells.

Monitor wells converted to extraction wells	Date completed	Casing depth (ft bgs)	Screen interval (ft bgs)	Sand-pack interval (ft bgs)	HSU	Yield under current conditions (gpm)	Total VOCs (μg/L) 2006	Total uranium pCi/L) 2006	$^{235}U/^{238}U$ atom ratio 2006	Perchlorate (μg/L) 2006	Nitrate (as NO_3) (mg/L) 2006	Tritium (pCi/L) 2006
NC7-25	12/1/84	69	54-69	43-70	$Tnbs_0$	<0.1	<0.5	33	0.007254	14	38	328,000
NC7-63	10/27/88	31.3	25.5-30.9	16-31.3	Qal/WBR	<0.1	NS	150	0.003658	<4	38	210,000
NC7-64	10/31/88	43.5	37.9-42.8	34-43.5	Qal/WBR	<0.1	NS	87	0.005482	7.8	39	142,000
W-PIT7-1918	2/18/03	25.2	10-25	6.5-25.2	Qal/WBR	<0.1	NS	50	0.0034	NS	NS	NS

New extraction wells	Date completed	Casing depth (ft bgs)	Screen interval (ft bgs)	Sand-pack interval (ft bgs)	HSU	Yield under current conditions (gpm)	Total VOCs (μg/L) 2007	Total uranium pCi/L) 2007	$^{235}U/^{238}U$ atom ratio 2007	Perchlorate (μg/L) 2007	Nitrate (as NO_3) (mg/L) 2007	Tritium (pCi/L) 2007
W-PIT7-2305	5/1/07	36.5	16-36	14-38	Qal/WBR &			12	0.007181		42	
					$Tnbs_0$	<0.1	0.88			15		61,400
W-PIT7-2306	4/24/07	45.5	15-45	12-48	Qal/WBR	<0.1	8.2	Pending	0.006748	16	24	2,880
W-PIT7-2307	6/7/07	47.5	17-47	14-48	Qal/WBR	0.75	9.2	19	0.006783	9.9	30	56,000

Notes:

^{235}U = Uranium-235.
^{238}U = Uranium-238.
bgs = Below ground surface.
ft = Feet.
HSU = Hydrostratigraphic unit.
mg/L = Milligrams per liter.
NS = Not sampled for this COC during the year.
NA = Not applicable.
Qal/WBR = Quaternary alluvium/Weathered bedrock.
$Tnbs_0$ = Miocene Basal Lower Neroly blue sandstone unit.
μg/L = Micrograms per liter.
pCi/L = picoCuries per liter.
VOCs = Volatile organic compounds.

Table 5. Design specifications for Pit 7 Complex ground water extraction and treatment system.

Facility capabilities	**– Ground water extraction from 7 wells** **– Ground water treatment with granular activated carbon (GAC) for removal of volatile organic compounds.** **- Ground water treatment with ion-exchange resin for removal of uranium, nitrate and perchlorate.** **– Discharge of treated water into unsaturated alluvium via infiltration trench.** **– Treatment facility freeze protection via solar radiation.** **– Water conveyance pipeline freeze protection via gravity drains.**
Anticipated maximum flow rate	**About 88,128 gallons per month.**
Maximum design flow rate (treatment capacity)	**About 133,488 gallons per month.**
Extraction wells	**Wells NC7-25, NC7-63, NC7-64, W-PIT7-1918, W-PIT7-2305, W-PIT7-2306, W-PIT7-2307. (Three additional extraction well may be added later.)**
Extraction well pump type	**On demand pneumatic pump by QED (SHORT AP4B and AP2B).**
Water flow meters	**Positive displacement with electronic pulse transmitters by Neptune.**
Water conveyance line	**1 inch PVC pipe.**
Compressed air lines	**½ inch copper.**
Particulate filter	**Bag filter with 8.25 inch bags by Pentek.**
Treatment media	**– Three canisters with 2.5 cubic feet each of aqueous-phase GAC in series for VOC removal.** **– Three vessels with 2.5 cubic feet each of ion-exchange resin (USF A-284) columns in series for uranium removal.** **– Three vessels with 2.5 cubic feet each of ion-exchange resin (Sybron SR7) columns in series for nitrate and perchlorate removal.**
Treatment media housing	**3.6 cubic foot capacity fiber wound vessels. Max 150 psi.**
Transfer tank	**Stainless steel (3' x 4' x 3.5').**
Transfer pump	**Pneumatic diaphragm pump (P1 METAL) by WILDEN.**
Air compressor	**1.5 HP, 30GAL 115V, 60Hz, 1pz by GAST, model 7HDD-11TM750X.**
Automated controls	**– Pneumatic float switch by KENCO, Model 106.** **– Air operated valve (ASCO P210D14).**

Notes appear on following page.

Table 5. Design specifications for Pit 7 Complex ground water extraction and treatment system. (Page 2 of 2)

Notes:

Equipment is as specified or equivalent.

GAC = Granular activated carbon.
HP = Horsepower.
HZ = Herz.
psi = Parts per square inch.
PVC = Polyvinyl chloride.
V = Volts.

Table 6. Comparison of rainfall intensity and total runoff calculations for the Pit 7 eastern hillslope.

	Return period	Rainfall intensity for 12 inch mean annual precipitation	Total runoff
DDS Design (Eastern Hillslope)	10-year, 8 to 12 minute time-of-concentration	2.2 inches per hour[a]	60.1 cfs (San Joaquin County Hydrology Manual Method)
LLNL	25-year, 24-hour	0.11 inches per hour[b]	2.2 cfs (Rational method)
DTSC	50-year, 24-hour	0.11 inches per hour[c]	2.2 cfs (Rational method)
EPA and 27 CCR	100-year, 24 hour	0.13 inches per hour[d]	2.6 cfs (Rational method)

Notes:

cfs = Cubic feet per second.
CCR = California Code of Regulations.
DDS = Drainage diversion system.
DTSC = Department of Toxic Substances Control.
EPA = U.S. Environmental Protection Agency.
LLNL = Lawrence Livermore National Laboratory.

[a] San Joaquin County Hydrology Manual Table B-10.
[b] San Joaquin County Hydrology Manual Table B-11.
[c] San Joaquin County Hydrology Manual Table B-12.
[d] San Joaquin County Hydrology Manual Table B-13.

Table 7. Pit 7 Complex remedial action and document schedule.

Activity	Completion date
Pit 7 Hydraulic Drainage Diversion Implementation	Fall 2007
Pit 7 Ground Water Extraction and Treatment System Start-up	Fall 2007
Remedial Action Completion Report	To be determined
Draft Building 850/Pits 3 & 5 OU Five-Year Review	June 26, 2009
Draft Final Building 850/Pits 3 & 5 OU Five-Year Review	November 2, 2009
Final Building 850/Pits 3 & 5 OU Five-Year Review	December 14, 2009

Notes:

The Pit 7 Complex will be incorporated into the Building 850 Five-Year Review Schedule.

OU = Operable unit.

Table 8. Cost estimate for compliance monitoring and MNA at the Pit 7 Complex.

Activity	Sub-Activity	Parameter	Quantity	Unit	Direct Capital ($)	Indirect Capital ($)	Total ($)
Monitoring and Reporting[a]							
	Water levels	Wells measured per quarter	63	each	$2,205		
	Water quality sampling	Well sampled per quarter	40	each	$18,000		
	Water quality analyses						
	Tritium	Samples collected per year	125	samples	$18,889		
	Uranium by alpha spectrometry	Samples collected per year	57	samples	$12,851		
	Uranium by mass spectrometry	Samples collected per year	55	samples	$13,750		
	EPA Method 601 VOCs	Samples collected per year	63	samples	$5,426		
	Nitrate	Samples collected per year	79	samples	$1,422		
	Perchlorate	Samples collected per year	74	samples	$9,413		
	Title 26 metals	Samples collected per year	11	samples	$5,604		
	Data management	Labor	160	hours		$12,800	
	Data analysis, representation, and reporting	Labor	200	hours		$22,000	
	Well and pump maintenance (7 each/year)	Wells	21	hours		$1,365	
	Well and pump maintenance (7 each/year)	Materials	7	each	$10,500		
Subtotal costs:					$ 98,060	$ 36,165	$134,225
Tritium MNA Effectiveness Evaluation							
	Data evaluation and reporting	Labor	100	hours		$11,000	
Subtotal costs:						$11,000	$11,000
			Total annual costs:				$145,225
			Assumed interest rate = 5% (30 year design life)				
			Total Costs (net present value):				$2,232,464

Notes:

EPA = U.S. Environmental Protection Agency.
MNA = Monitored natural attenuation.
VOCs = Volatile organic compounds.

[a] Includes costs for monitoring of the effectiveness of tritium natural attenuation.

Table 9. Cost estimate for the Pit 7 ground water extraction and treatment system.

Activity	Sub-Activity	Parameter	Quantity	Unit	Direct Capital ($)	Indirect Capital ($)	Annual O&M($)
System Design							
	Design	Labor	80	days		$60,000	
	Procurement	Labor	15	days		$11,250	
	Design Reviews	Labor	20	days		$15,000	
	Permits	Labor	10	days		$7,500	
				Subtotal Cost:	$0	$93,750	$0
System Construction							
	Extraction well installation	Labor/Materials/Equipment	6	wells	$166,749		
	Infiltration trench installation	Labor	12	days		$7,920	
		Materials/Equipment	1	total	$12,000		
	Facility Fabrication	Labor	30	days		$19,800	
		Materials/Equipment	all	total	$19,775		
		Contract (Power hookup, concrete pad, enclosure)	all	total	$26,000		
	Site Preparation	Labor	6	days		$3,960	
		Materials/Equipment	all	total	$5,000		
	Pipeline construction	Labor	30	days		$19,800	
		Materials/Equipment	all	total	$25,000		
		Contract (road crossings)	all	total	$10,000		
	Wellheads/pumps/controls	Labor	20	days		$13,200	
		Materials/Equipment	10	wells	$63,830		
				Subtotal Cost:	$328,354	$64,680	$0
Facility Startup							
	Leak Check and Optimization	Labor	16	days		$10,560	
	Sampling	Labor	5	days		$3,300	
	Analytical	Contract	all	total	$4,000		
				Subtotal Cost:	$4,000	$13,860	$0
				Design and Construction Total:	$332,354	$172,290	

Table 9. Cost estimate for the Pit 7 ground water extraction and treatment system. (Page 2 of 2)

Activity	Sub-Activity	Parameter	Quantity	Unit	Direct Capital ($)	Indirect Capital ($)	Annual O&M($)
Operations and Maintenance							
	Facility maintenance and sampling		1	cy			$81,021
	Media replacement (27 dry years)	Labor	37	days			$24,420
		Reactive media[a, b]	172	cu ft			$39,000
	Media Replacement (3 wet years)	Labor	55	days			$36,300
		Reactive media[a, b]	260	cu ft			$60,000
	Optimization, reporting, and data management		1	cy			$26,666
				Subtotal Cost:	$0	$0	$267,407
		Assumed interest rate = 5% (30 year design life)					
			Total Costs (net present value):				$3,159,000

Notes:

[a] Assumes spent reactive media is characterized as radiological waste ($90/drum for disposal), not mixed waste. If spent reactive media is characterized as mixed waste, disposal costs will increase to approximately $16,500/drum.

[b] Average weighted cost of reactive media is $209/cu. ft.

Table 10. Cost estimate for the Pit 7 Complex engineered drainage diversion system.

Activity	Sub-Activity	Parameter	Quantity	Unit	Direct Capital ($)	Indirect Capital ($)	Annual O&M($)
System Design							
	Pre-construction surveys		1	total	$ 12,300		
	Design Contract		1	total	$ 254,205		
	Project Management and Support	Labor	43	days		$ 47,472	
	Technical Support	Labor	63	days		$ 68,955	
	Design Reviews	Labor	43	days		$ 47,472	
	Permits & clearances	Labor	11	days		$ 12,006	
Subtotal Cost:					$ 266,505	$ 175,905	$0
System Construction							
	Construction Contract	Labor, Material & Equipment	1	total	$ 762,616		
	Project Management and Support	Labor	27	days		$ 29,698	
	Technical Support	Labor	63	days		$ 78,348	
	Construction Management and Inspectio	Labor	45	days		$ 111,600	
	ES&H coordination (Hazards Control)	Labor	15	days		$ 16,560	
Subtotal Cost:					$ 762,616	$ 236,206	$0
Operations and Maintenance							
	Materials, equipment, contracts		1	cy			$ 20,000
	Maintenance labor	Labor	20	days			$ 22,080
Subtotal Cost:					$0	$0	$ 42,080
							$ 42,080
		Assumed interest rate = 5% (30 year design life)					
			Total Costs (net present value):		$ 1,029,121	$ 412,111	$ 646,900
							$ 2,088,132

Appendix A

Ground Water Elevation and Analytical Chemistry Data Tables

Appendix A

List of Ground Water Elevation and Analytical Data Tables

Table A-1. Ground water elevations for monitor wells in the Pit 7 Complex measured between July 1, 2003 and December 31, 2006.

Table A-2. Ground and surface water analyses for tritium (pCi/L) in samples collected from the Pit 7 Complex July 1, 2003 and December 31, 2006.

Table A-3. Ground/surface water mass spectrometric analyses for uranium isotopes (pCi/L) and U235/U238 atom ratio collected from the Pit 7 Complex between July 1, 2003 and December 31, 2006.

Table A-4. Ground/surface water alpha spectrometric analyses for uranium isotopes (pCi/L) in samples collected from the Pit 7 Complex between July 1, 2003 and December 31, 2006.

Table A-5. Ground and surface water mass spectrometric analyses for thorium isotopes (pCi/L) in samples collected from the Pit 7 Complex between July 1, 2003 and December 31, 2006.

Table A-6. Ground and surface water analyses for nitrogenous compounds (mg/L) in samples collected from the Pit 7 Complex between July 1, 2003 and December 31, 2006.

Table A-7. Ground and surface water analyses for perchlorate (mg/L) in samples collected from the Pit7 Complex between July 1, 2003 and December 31, 2006.

Table A-8. Ground and surface water analyses for cations (mg/L) in samples collected from the Pit 7 Complex between July 1, 2003 and December 31, 2006.

Table A-9. Ground and surface water analyses for metals ((mg/L)) in samples collected from the Pit 7 Complex between July 1, 2003 and December 31, 2006.

Table A-10. Ground and surface water analyses for volatile organic compounds (µg/L) in samples collected from the Pit 7 Complex between July 1, 2003 and December 31, 2006.

Table A-11. Ground and surface water analyses for aromatic hydrocarbons compounds (µg/L) in samples collected from the Pit 7 Complex between July 1, 2003 and December 31, 2006.

Table A-12. Ground and surface water analyses for anions, TDS, specific conductivity, and pH in samples collected from the Pit 7 Complex between July 1, 2003 and December 31, 2006.

Table A-13. Ground and surface water analyses for high explosives compounds (µg/L) in sample collected from the Pit 7 Complex between July 1, 2003 and December 31, 2006.

Table A-14. Ground and surface water analyses for PCBs (µg/L) in samples collected from the Pit 7 Complex between July 1, 2003 and December 31, 2006.

Table A-1. Ground water elevations for monitor wells in the Pit 7 Complex measured between July 1, 2003 and December 31, 2006.

Location	Sample Date	Depth to water	Elevation	Report Note*
K7-01	11-Jul-03	20.70	1298.32	
K7-01	9-Sep-03	20.79	1298.23	PS
K7-01	1-Oct-03	20.82	1298.20	
K7-01	2-Dec-03	20.88	1298.14	PS
K7-01	8-Jan-04	20.92	1298.10	
K7-01	21-Jan-04	20.94	1298.08	PS
K7-01	7-Apr-04	20.94	1298.08	
K7-01	28-Apr-04	20.93	1298.09	PS
K7-01	14-Jul-04	20.98	1298.04	
K7-01	14-Sep-04	20.96	1298.06	
K7-01	21-Sep-04	20.96	1298.06	
K7-01	18-Oct-04	20.98	1298.04	
K7-01	2-Nov-04	20.88	1298.14	PS
K7-01	7-Jan-05	20.91	1298.11	
K7-01	24-Jan-05	20.94	1298.08	PS
K7-01	2-Apr-05	20.89	1298.13	
K7-01	5-Apr-05	20.88	1298.14	PS
K7-01	1-Jul-05	20.89	1298.13	
K7-01	11-Jul-05	20.89	1298.13	PS
K7-01	10-Oct-05	19.87	1299.15	PS
K7-01	20-Dec-05	20.63	1298.39	PS
K7-01	28-Dec-05	20.86	1298.16	PS
K7-01	3-Jan-06	20.88	1298.14	PS
K7-01	3-Jan-06	20.88	1298.14	
K7-01	12-Apr-06	21.10	1297.92	
K7-01	13-Apr-06	21.03	1297.99	PS
K7-01	5-Jul-06	20.93	1298.09	PS
K7-01	4-Oct-06	19.88	1299.14	
K7-01	9-Oct-06	20.98	1298.04	PS
K7-03	1-Jul-03	29.34	1309.75	
K7-03	9-Sep-03	29.69	1309.40	PS
K7-03	17-Sep-03	29.86	1309.23	PS
K7-03	1-Oct-03	29.90	1309.19	
K7-03	5-Dec-03	30.11	1308.98	PS
K7-03	9-Dec-03	30.23	1308.86	PS
K7-03	7-Jan-04	28.35	1310.74	
K7-03	21-Jan-04	27.28	1311.81	PS
K7-03	8-Apr-04	26.96	1312.13	
K7-03	14-Jul-04	28.95	1310.14	
K7-03	10-Aug-04	29.28	1309.81	PS

Table A-1. Ground water elevations for monitor wells in the Pit 7 Complex measured between July 1, 2003 and December 31, 2006.

Location	Sample Date	Depth to water	Elevation	Report Note*
K7-03	18-Oct-04	29.90	1309.19	
K7-03	29-Oct-04	30.08	1309.01	PS
K7-03	8-Jan-05	30.55	1308.54	
K7-03	25-Jan-05	27.06	1312.03	PS
K7-03	2-Apr-05	24.32	1314.77	
K7-03	14-Apr-05	24.71	1314.38	PS
K7-03	21-Apr-05	25.06	1314.03	PS
K7-03	30-Jun-05	25.56	1313.53	PS
K7-03	1-Jul-05	25.53	1313.56	
K7-03	7-Jul-05	25.51	1313.58	PS
K7-03	12-Jul-05	25.51	1313.58	PS
K7-03	6-Oct-05	25.73	1313.36	PS
K7-03	27-Oct-05	25.83	1313.26	PS
K7-03	5-Jan-06	20.11	1318.98	
K7-03	5-Jan-06	26.15	1312.94	PS
K7-03	23-Mar-06	26.06	1313.03	PS
K7-03	30-Mar-06	25.80	1313.29	PS
K7-03	5-Apr-06	25.33	1313.76	
K7-03	24-Apr-06	24.28	1314.81	PS
K7-03	6-Jul-06	24.64	1314.45	PS
K7-03	6-Jul-06	24.64	1314.45	
K7-03	4-Oct-06	24.83	1314.26	PS
K7-03	4-Oct-06	24.83	1314.26	
K7-06	1-Jul-03	26.78	1387.17	
K7-06	5-Aug-03	26.79	1387.16	PS
K7-06	1-Oct-03	26.60	1387.35	
K7-06	4-Dec-03	26.73	1387.22	PS
K7-06	21-Jan-04	24.88	1389.07	
K7-06	27-Jan-04	25.29	1388.66	PS
K7-06	8-Apr-04	25.62	1388.33	
K7-06	2-Jun-04	26.77	1387.18	PS
K7-06	13-Jul-04	27.20	1386.75	
K7-06	18-Aug-04	27.22	1386.73	PS
K7-06	14-Oct-04	27.10	1386.85	
K7-06	4-Nov-04	26.74	1387.21	PS
K7-06	15-Jan-05	23.81	1390.14	
K7-06	1-Feb-05	24.79	1389.16	PS
K7-06	2-Apr-05	24.19	1389.76	
K7-06	5-Apr-05	24.32	1389.63	PS
K7-06	1-Jul-05	26.45	1387.50	

Table A-1. Ground water elevations for monitor wells in the Pit 7 Complex measured between July 1, 2003 and December 31, 2006.

Location	Sample Date	Depth to water	Elevation	Report Note*
K7-06	3-Aug-05	26.60	1387.35	PS
K7-06	10-Oct-05	25.80	1388.15	PS
K7-06	31-Oct-05	25.81	1388.14	PS
K7-06	13-Jan-06	24.37	1389.58	PS
K7-06	13-Jan-06	24.37	1389.58	
K7-06	11-Apr-06	23.25	1390.70	
K7-06	25-Apr-06	23.95	1390.00	PS
K7-06	5-Jul-06	25.35	1388.60	PS
K7-06	3-Oct-06	25.74	1388.21	PS
K7-06	3-Oct-06	25.74	1388.21	
K7-07	1-Jul-03	0.00	0.00	DRY
K7-07	1-Oct-03	0.00	0.00	DRY
K7-07	6-Jan-04	0.00	0.00	DRY
K7-07	7-Apr-04	22.87	1275.15	
K7-07	14-Jul-04	0.00	1298.02	
K7-07	14-Oct-04	0.00	1298.02	DRY
K7-07	7-Jan-05	22.88	1275.14	DRY
K7-07	2-Apr-05	22.18	1275.84	
K7-07	21-Apr-05	22.51	1275.51	PS
K7-07	1-Jul-05	0.00		DRY
K7-07	6-Oct-05	0.00		DRY
K7-07	27-Jan-06	0.00		DRY
K7-07	28-Apr-06	21.54	1276.48	
K7-07	18-Jul-06	0.00		DRY
K7-07	3-Oct-06	0.00		DRY
K7-09	7-Jul-03	48.47	1296.83	
K7-09	9-Sep-03	49.37	1295.93	PS
K7-09	1-Oct-03	49.15	1296.15	
K7-09	3-Dec-03	49.48	1295.82	PS
K7-09	6-Jan-04	49.27	1296.03	
K7-09	26-Jan-04	49.51	1295.79	PS
K7-09	3-Mar-04	49.19	1296.11	PS
K7-09	10-Mar-04	48.90	1296.40	PS
K7-09	8-Apr-04	48.40	1296.90	
K7-09	3-May-04	48.62	1296.68	PS
K7-09	13-Jul-04	49.13	1296.17	
K7-09	17-Aug-04	49.34	1295.96	PS
K7-09	14-Oct-04	49.70	1295.60	
K7-09	4-Nov-04	49.56	1295.74	PS
K7-09	21-Jan-05	49.50	1295.80	

Table A-1. Ground water elevations for monitor wells in the Pit 7 Complex measured between July 1, 2003 and December 31, 2006.

Location	Sample Date	Depth to water	Elevation	Report Note*
K7-09	10-Feb-05	49.01	1296.29	PS
K7-09	24-Feb-05	48.91	1296.39	PS
K7-09	4-Apr-05	48.26	1297.04	PS
K7-09	4-Apr-05	48.26	1297.04	
K7-09	13-Jul-05	48.55	1296.75	
K7-09	2-Aug-05	48.45	1296.85	PS
K7-09	10-Oct-05	48.43	1296.87	PS
K7-09	1-Nov-05	48.46	1296.84	PS
K7-09	4-Jan-06	48.61	1296.69	PS
K7-09	4-Jan-06	48.61	1296.69	
K7-09	12-Apr-06	48.12	1297.18	
K7-09	2-May-06	47.69	1297.61	PS
K7-09	17-Jul-06	47.92	1297.38	PS
K7-09	17-Jul-06	47.92	1297.38	
K7-09	4-Oct-06	47.96	1297.34	PS
K7-09	4-Oct-06	47.96	1297.34	
K7-10	7-Jul-03	36.31	1307.00	
K7-10	31-Jul-03	36.47	1306.84	PS
K7-10	22-Sep-03	36.82	1306.49	PS
K7-10	1-Oct-03	37.02	1306.29	
K7-10	4-Dec-03	36.93	1306.38	PS
K7-10	6-Jan-04	36.85	1306.46	
K7-10	27-Jan-04	36.67	1306.64	PS
K7-10	8-Apr-04	34.55	1308.76	
K7-10	3-May-04	35.31	1308.00	PS
K7-10	2-Jun-04	35.68	1307.63	PS
K7-10	9-Jun-04	35.81	1307.50	PS
K7-10	12-Jul-04	35.92	1307.39	
K7-10	17-Aug-04	36.44	1306.87	PS
K7-10	14-Oct-04	36.72	1306.59	
K7-10	23-Nov-04	36.83	1306.48	PS
K7-10	21-Jan-05	32.75	1310.56	
K7-10	3-Feb-05	33.15	1310.16	PS
K7-10	4-Apr-05	32.85	1310.46	PS
K7-10	4-Apr-05	32.85	1310.46	
K7-10	7-Jun-05	34.89	1308.42	PS
K7-10	14-Jun-05	34.94	1308.37	PS
K7-10	13-Jul-05	35.33	1307.98	
K7-10	2-Aug-05	35.38	1307.93	PS
K7-10	10-Oct-05	35.70	1307.61	PS

Table A-1. Ground water elevations for monitor wells in the Pit 7 Complex measured between July 1, 2003 and December 31, 2006.

Location	Sample Date	Depth to water	Elevation	Report Note*
K7-10	1-Nov-05	35.79	1307.52	PS
K7-10	4-Jan-06	36.03	1307.28	PS
K7-10	4-Jan-06	36.03	1307.28	
K7-10	12-Apr-06	31.56	1311.75	
K7-10	2-May-06	32.76	1310.55	PS
K7-10	17-Jul-06	34.86	1308.45	PS
K7-10	17-Jul-06	34.86	1308.45	
K7-10	3-Oct-06	35.27	1308.04	PS
K7-10	3-Oct-06	35.27	1308.04	
NC7-12	11-Jul-03	22.36	1263.33	
NC7-12	7-Oct-03	22.57	1263.12	
NC7-12	8-Jan-04	22.15	1263.54	
NC7-12	7-Apr-04	21.13	1264.56	
NC7-12	14-Jul-04	22.65	1263.04	
NC7-12	14-Oct-04	22.80	1262.89	
NC7-12	7-Jan-05	21.83	1263.86	
NC7-12	2-Apr-05	18.79	1266.90	
NC7-12	1-Jul-05	21.46	1264.23	
NC7-12	6-Oct-05	22.23	1263.46	
NC7-12	27-Jan-06	21.40	1264.29	
NC7-12	10-Apr-06	20.24	1265.45	
NC7-12	18-Jul-06	21.45	1264.24	
NC7-12	17-Oct-06	22.02	1263.67	
NC7-15	11-Jul-03	21.59	1247.82	
NC7-15	3-Oct-03	21.67	1247.74	
NC7-15	8-Jan-04	21.35	1248.06	
NC7-15	7-Apr-04	20.65	1248.76	
NC7-15	14-Jul-04	21.64	1247.77	
NC7-15	14-Oct-04	21.99	1247.42	
NC7-15	8-Jan-05	21.28	1248.13	
NC7-15	2-Apr-05	19.40	1250.01	
NC7-15	1-Jul-05	20.92	1248.49	
NC7-15	6-Oct-05	21.56	1247.85	
NC7-15	27-Jan-06	21.12	1248.29	
NC7-15	6-Apr-06	20.30	1249.11	
NC7-15	18-Jul-06	21.00	1248.41	
NC7-15	17-Oct-06	21.38	1248.03	
NC7-16	1-Jul-03	28.36	1282.68	
NC7-16	3-Oct-03	28.79	1282.25	
NC7-16	8-Jan-04	27.22	1283.82	

Table A-1. Ground water elevations for monitor wells in the Pit 7 Complex measured between July 1, 2003 and December 31, 2006.

Location	Sample Date	Depth to water	Elevation	Report Note*
NC7-16	7-Apr-04	27.61	1283.43	
NC7-16	14-Jul-04	28.64	1282.40	
NC7-16	14-Oct-04	28.90	1282.14	
NC7-16	7-Jan-05	28.68	1282.36	
NC7-16	2-Apr-05	23.89	1287.15	
NC7-16	1-Jul-05	25.71	1285.33	
NC7-16	10-Oct-05	26.95	1284.09	
NC7-16	30-Jan-06	26.10	1284.94	
NC7-16	12-Apr-06	24.58	1286.46	
NC7-16	18-Jul-06	25.90	1285.14	
NC7-16	17-Oct-06	26.55	1284.49	
NC7-17	7-Jul-03	30.37	1359.13	
NC7-17	1-Oct-03	30.60	1358.90	
NC7-17	20-Jan-04	29.92	1359.58	
NC7-17	8-Apr-04	27.92	1361.58	
NC7-17	13-Jul-04	30.00	1359.50	
NC7-17	14-Oct-04	30.40	1359.10	
NC7-17	15-Jan-05	29.86	1359.64	
NC7-17	4-Apr-05	25.81	1363.69	
NC7-17	1-Jul-05	28.03	1361.47	
NC7-17	10-Oct-05	28.96	1360.54	
NC7-17	27-Jan-06	28.10	1361.40	
NC7-17	11-Apr-06	27.10	1362.40	
NC7-17	18-Jul-06	28.30	1361.20	
NC7-17	17-Oct-06	29.16	1360.34	
NC7-18	7-Jul-03	23.77	1308.49	
NC7-18	1-Oct-03	24.58	1307.68	
NC7-18	6-Jan-04	24.04	1308.22	
NC7-18	8-Apr-04	19.81	1312.45	
NC7-18	13-Jul-04	22.63	1309.63	
NC7-18	14-Oct-04	23.62	1308.64	
NC7-18	21-Jan-05	18.40	1313.86	
NC7-18	4-Apr-05	16.54	1315.72	
NC7-18	1-Jul-05	20.74	1311.52	
NC7-18	10-Oct-05	21.88	1310.38	
NC7-18	30-Jan-06	19.40	1312.86	
NC7-18	12-Apr-06	14.90	1317.36	
NC7-18	18-Jul-06	21.30	1310.96	
NC7-18	17-Oct-06	21.84	1310.42	
NC7-19	1-Jul-03	21.65	1241.33	

Table A-1. Ground water elevations for monitor wells in the Pit 7 Complex measured between July 1, 2003 and December 31, 2006.

Location	Sample Date	Depth to water	Elevation	Report Note*
NC7-19	3-Oct-03	21.83	1241.15	
NC7-19	20-Jan-04	21.20	1241.78	
NC7-19	7-Apr-04	20.73	1242.25	
NC7-19	14-Jul-04	21.75	1241.23	
NC7-19	14-Oct-04	22.00	1240.98	
NC7-19	14-Jan-05	21.12	1241.86	
NC7-19	4-Apr-05	19.76	1243.22	
NC7-19	1-Jul-05	21.16	1241.82	
NC7-19	6-Oct-05	21.65	1241.33	
NC7-19	30-Jan-06	21.12	1241.86	
NC7-19	28-Apr-06	21.12	1241.86	
NC7-19	19-Jul-06	21.15	1241.83	
NC7-19	17-Oct-06	21.48	1241.50	
NC7-20	1-Jul-03	37.86	1257.53	
NC7-20	7-Oct-03	38.09	1257.30	
NC7-20	6-Jan-04	37.92	1257.47	
NC7-20	7-Apr-04	36.99	1258.40	
NC7-20	14-Jul-04	38.10	1257.29	
NC7-20	14-Oct-04	38.30	1257.09	
NC7-20	15-Jan-05	37.84	1257.55	
NC7-20	1-Apr-05	35.00	1260.39	
NC7-20	1-Jul-05	36.90	1258.49	
NC7-20	6-Oct-05	37.70	1257.69	
NC7-20	27-Jan-06	37.40	1257.99	
NC7-20	12-Apr-06	36.85	1258.54	
NC7-20	18-Jul-06	36.95	1258.44	
NC7-20	19-Oct-06	37.51	1257.88	
NC7-21	1-Jul-03	28.72	1275.45	
NC7-21	3-Oct-03	29.05	1275.12	
NC7-21	6-Jan-04	28.25	1275.92	
NC7-21	2-Apr-04	27.06	1277.11	
NC7-21	14-Apr-04	28.35	1275.82	
NC7-21	14-Jul-04	29.25	1274.92	
NC7-21	14-Oct-04	29.53	1274.64	
NC7-21	15-Jan-05	28.72	1275.45	
NC7-21	1-Jul-05	27.41	1276.76	
NC7-21	10-Oct-05	28.07	1276.10	
NC7-21	30-Jan-06	27.55	1276.62	
NC7-21	12-Apr-06	26.62	1277.55	
NC7-21	18-Jul-06	27.30	1276.87	

Table A-1. Ground water elevations for monitor wells in the Pit 7 Complex measured between July 1, 2003 and December 31, 2006.

Location	Sample Date	Depth to water	Elevation	Report Note*
NC7-21	18-Oct-06	27.88	1276.29	
NC7-22	1-Jul-03	0.00	0.00	DRY
NC7-22	1-Oct-03	0.00	0.00	DRY
NC7-22	6-Jan-04	0.00	0.00	DRY
NC7-22	14-Apr-04	0.00	0.00	DRY
NC7-22	14-Jul-04	0.00	0.00	DRY
NC7-22	14-Oct-04	0.00	0.00	DRY
NC7-22	15-Jan-05	0.00	0.00	DRY
NC7-22	1-Apr-05	0.00	0.00	DRY
NC7-22	1-Jul-05	0.00	0.00	DRY
NC7-22	10-Oct-05	0.00		DRY
NC7-22	30-Jan-06	0.00		DRY
NC7-22	12-Apr-06	0.00		DRY
NC7-22	18-Jul-06	0.00		DRY
NC7-22	19-Oct-06	0.00		DRY
NC7-24	1-Jul-03	0.00	0.00	DRY
NC7-24	1-Oct-03	0.00	0.00	DRY
NC7-24	7-Jan-04	0.00	0.00	DRY
NC7-24	14-Apr-04	0.00	0.00	DRY
NC7-24	14-Jul-04	0.00	0.00	DRY
NC7-24	14-Oct-04	0.00	0.00	DRY
NC7-24	8-Jan-05	0.00	0.00	DRY
NC7-24	1-Apr-05	0.00		DRY
NC7-24	1-Jul-05	0.00		DRY
NC7-24	6-Oct-05	0.00		DRY
NC7-24	27-Jan-06	0.00		DRY
NC7-24	11-Apr-06	0.00		DRY
NC7-24	21-Jul-06	0.00		DRY
NC7-24	19-Oct-06	0.00		DRY
NC7-25	7-Jul-03	67.04	1299.78	
NC7-25	31-Jul-03	67.09	1299.73	PS
NC7-25	1-Oct-03	67.20	1299.62	
NC7-25	5-Dec-03	67.23	1299.59	PS
NC7-25	6-Jan-04	67.26	1299.56	
NC7-25	4-Mar-04	67.33	1299.49	PS
NC7-25	8-Apr-04	67.31	1299.51	
NC7-25	29-Apr-04	67.27	1299.55	PS
NC7-25	14-Jul-04	67.39	1299.43	
NC7-25	22-Jul-04	67.33	1299.49	PS
NC7-25	1-Sep-04	67.48	1299.34	

Table A-1. Ground water elevations for monitor wells in the Pit 7 Complex measured between July 1, 2003 and December 31, 2006.

Location	Sample Date	Depth to water	Elevation	Report Note*
NC7-25	8-Sep-04	67.49	1299.33	
NC7-25	14-Oct-04	67.53	1299.29	
NC7-25	29-Oct-04	67.52	1299.30	PS
NC7-25	15-Jan-05	62.48	1304.34	
NC7-25	25-Jan-05	67.54	1299.28	PS
NC7-25	2-Apr-05	67.50	1299.32	
NC7-25	6-Apr-05	67.53	1299.29	PS
NC7-25	14-Apr-05	67.56	1299.26	PS
NC7-25	21-Apr-05	67.56	1299.26	PS
NC7-25	1-Jul-05	67.29	1299.53	
NC7-25	12-Jul-05	67.20	1299.62	PS
NC7-25	6-Oct-05	66.97	1299.85	PS
NC7-25	26-Oct-05	66.89	1299.93	PS
NC7-25	5-Jan-06	67.17	1299.65	PS
NC7-25	5-Jan-06	67.17	1299.65	
NC7-25	12-Apr-06	67.35	1299.47	
NC7-25	24-Apr-06	67.29	1299.53	PS
NC7-25	10-Jul-06	66.71	1300.11	PS
NC7-25	10-Jul-06	66.71	1300.11	
NC7-25	4-Oct-06	66.60	1300.22	PS
NC7-25	4-Oct-06	66.60	1300.22	
NC7-26	7-Jul-03	71.68	1256.99	
NC7-26	3-Oct-03	71.61	1257.06	
NC7-26	6-Jan-04	71.64	1257.03	
NC7-26	27-Jan-04	71.66	1257.01	PS
NC7-26	14-Apr-04	71.75	1256.92	
NC7-26	29-Apr-04	71.68	1256.99	PS
NC7-26	14-Jul-04	71.70	1256.97	
NC7-26	5-Aug-04	71.74	1256.93	PS
NC7-26	14-Oct-04	71.76	1256.91	
NC7-26	2-Nov-04	71.86	1256.81	PS
NC7-26	15-Jan-05	71.90	1256.77	
NC7-26	27-Jan-05	71.87	1256.80	PS
NC7-26	1-Apr-05	71.84	1256.83	
NC7-26	6-Apr-05	71.76	1256.91	PS
NC7-26	14-Apr-05	71.67	1257.00	PS
NC7-26	1-Jul-05	71.61	1257.06	
NC7-26	12-Jul-05	71.58	1257.09	PS
NC7-26	10-Oct-05	71.60	1257.07	PS
NC7-26	20-Oct-05	71.56	1257.11	PS

Table A-1. Ground water elevations for monitor wells in the Pit 7 Complex measured between July 1, 2003 and December 31, 2006.

Location	Sample Date	Depth to water	Elevation	Report Note*
NC7-26	10-Jan-06	71.68	1256.99	NO SHINER
NC7-26	10-Jan-06	71.68	1256.99	PS
NC7-26	10-Jan-06	71.68	1256.99	PS
NC7-26	17-Jan-06	71.66	1257.01	PS
NC7-26	19-Jan-06	71.67	1257.00	PS
NC7-26	14-Feb-06	71.63	1257.04	PS
NC7-26	21-Feb-06	71.64	1257.03	PS
NC7-26	12-Apr-06	71.70	1256.97	
NC7-26	27-Apr-06	71.57	1257.10	PS
NC7-26	8-Jun-06	71.51	1257.16	PS
NC7-26	15-Jun-06	71.51	1257.16	PS
NC7-26	10-Jul-06	71.44	1257.23	PS
NC7-26	10-Jul-06	71.44	1257.23	
NC7-26	2-Oct-06	71.63	1257.04	PS
NC7-26	2-Oct-06	71.63	1257.04	
NC7-34	7-Jul-03	29.14	1335.19	
NC7-34	1-Oct-03	33.80	1330.53	
NC7-34	6-Jan-04	34.71	1329.62	
NC7-34	8-Apr-04	29.50	1334.83	
NC7-34	13-Jul-04	26.98	1337.35	
NC7-34	18-Oct-04	29.55	1334.78	
NC7-34	21-Jan-05	33.00	1331.33	
NC7-34	4-Apr-05	22.97	1341.36	
NC7-34	1-Jul-05	23.24	1341.09	
NC7-34	10-Oct-05	25.39	1338.94	
NC7-34	27-Jan-06	25.95	1338.38	
NC7-34	5-Apr-06	23.18	1341.15	
NC7-34	18-Jul-06	23.80	1340.53	
NC7-34	19-Oct-06	23.85	1340.48	
NC7-36	11-Jul-03	24.82	1337.12	
NC7-36	1-Oct-03	26.71	1335.23	
NC7-36	6-Jan-04	27.09	1334.85	
NC7-36	8-Apr-04	22.76	1339.18	
NC7-36	13-Jul-04	22.62	1339.32	
NC7-36	18-Oct-04	25.11	1336.83	
NC7-36	21-Jan-05	25.30	1336.64	
NC7-36	4-Apr-05	18.59	1343.35	
NC7-36	1-Jul-05	20.03	1341.91	
NC7-36	10-Oct-05	21.48	1340.46	
NC7-36	27-Jan-06	21.75	1340.19	

Table A-1. Ground water elevations for monitor wells in the Pit 7 Complex measured between July 1, 2003 and December 31, 2006.

Location	Sample Date	Depth to water	Elevation	Report Note*
NC7-36	11-Apr-06	18.75	1343.19	
NC7-36	18-Jul-06	20.50	1341.44	
NC7-36	19-Oct-06	20.79	1341.15	
NC7-37	1-Jul-03	0.00	0.00	DRY
NC7-37	1-Oct-03	0.00	0.00	DRY
NC7-37	8-Jan-04	0.00	0.00	DRY
NC7-37	8-Apr-04	0.00	0.00	DRY
NC7-37	14-Jul-04	0.00	0.00	DRY
NC7-37	18-Oct-04	0.00	0.00	DRY
NC7-37	8-Jan-05	0.00	0.00	DRY
NC7-37	4-Apr-05	0.00		DRY
NC7-37	1-Jul-05	27.25	1311.47	
NC7-37	6-Oct-05	26.50	1312.22	
NC7-37	27-Jan-06	27.50	1311.22	
NC7-37	5-Apr-06	27.15	1311.57	
NC7-37	18-Jul-06	22.75	1315.97	
NC7-37	19-Oct-06	22.21	1316.51	
NC7-40	11-Jul-03	23.18	1296.60	
NC7-40	1-Oct-03	23.25	1296.53	
NC7-40	8-Jan-04	22.99	1296.79	
NC7-40	7-Apr-04	22.00	1297.78	
NC7-40	14-Jul-04	22.80	1296.98	
NC7-40	18-Oct-04	23.31	1296.47	
NC7-40	7-Jan-05	23.18	1296.60	
NC7-40	2-Apr-05	19.52	1300.26	
NC7-40	1-Jul-05	20.64	1299.14	
NC7-40	10-Oct-05	21.31	1298.47	
NC7-40	30-Jan-06	21.10	1298.68	
NC7-40	12-Apr-06	20.40	1299.38	
NC7-40	18-Jul-06	20.72	1299.06	
NC7-40	18-Oct-06	20.99	1298.79	
NC7-47	24-Jul-03	62.75	1205.76	
NC7-47	5-Aug-03	62.75	1205.76	PS
NC7-47	4-Oct-03	62.74	1205.77	
NC7-47	5-Dec-03	62.78	1205.73	PS
NC7-47	6-Jan-04	62.76	1205.75	
NC7-47	8-Mar-04	62.73	1205.78	PS
NC7-47	14-Apr-04	62.80	1205.71	
NC7-47	26-Apr-04	62.82	1205.69	PS
NC7-47	13-Jul-04	62.80	1205.71	

Table A-1. Ground water elevations for monitor wells in the Pit 7 Complex measured between July 1, 2003 and December 31, 2006.

Location	Sample Date	Depth to water	Elevation	Report Note*
NC7-47	29-Jul-04	62.80	1205.71	PS
NC7-47	2-Aug-04	62.83	1205.68	PS
NC7-47	18-Oct-04	62.79	1205.72	
NC7-47	28-Oct-04	62.81	1205.70	PS
NC7-47	5-Jan-05	62.81	1205.70	
NC7-47	26-Jan-05	62.82	1205.69	PS
NC7-47	1-Apr-05	62.87	1205.64	
NC7-47	26-Apr-05	62.82	1205.69	PS
NC7-47	1-Jul-05	62.85	1205.66	
NC7-47	5-Jul-05	62.80	1205.71	PS
NC7-47	6-Jul-05	62.82	1205.69	PS
NC7-47	4-Oct-05	62.92	1205.59	PS
NC7-47	19-Oct-05	62.89	1205.62	PS
NC7-47	18-Jan-06	63.05	1205.46	
NC7-47	19-Jan-06	62.96	1205.55	PS
NC7-47	3-Apr-06	63.11	1205.40	
NC7-47	4-Apr-06	62.97	1205.54	PS
NC7-47	6-Jul-06	62.99	1205.52	PS
NC7-47	3-Oct-06	62.98	1205.53	PS
NC7-48	7-Jul-03	48.01	1345.39	
NC7-48	5-Aug-03	48.34	1345.06	PS
NC7-48	1-Oct-03	48.48	1344.92	
NC7-48	9-Dec-03	48.34	1345.06	PS
NC7-48	20-Jan-04	47.32	1346.08	
NC7-48	9-Mar-04	45.06	1348.34	PS
NC7-48	8-Apr-04	45.45	1347.95	
NC7-48	28-Apr-04	46.22	1347.18	PS
NC7-48	13-Jul-04	48.00	1345.40	
NC7-48	5-Aug-04	48.32	1345.08	PS
NC7-48	18-Oct-04	48.75	1344.65	
NC7-48	2-Nov-04	48.76	1344.64	PS
NC7-48	15-Jan-05	47.04	1346.36	
NC7-48	3-Feb-05	45.54	1347.86	PS
NC7-48	2-Apr-05	43.87	1349.53	
NC7-48	6-Apr-05	43.98	1349.42	PS
NC7-48	11-Jul-05	47.25	1346.15	PS
NC7-48	11-Jul-05	47.25	1346.15	
NC7-48	10-Oct-05	47.55	1345.85	PS
NC7-48	20-Oct-05	47.51	1345.89	PS
NC7-48	12-Jan-06	46.28	1347.12	PS

Table A-1. Ground water elevations for monitor wells in the Pit 7 Complex measured between July 1, 2003 and December 31, 2006.

Location	Sample Date	Depth to water	Elevation	Report Note*
NC7-48	13-Jan-06	46.28	1347.12	
NC7-48	23-Mar-06	55.62	1337.78	PS
NC7-48	30-Mar-06	45.48	1347.92	PS
NC7-48	11-Apr-06	44.85	1348.55	
NC7-48	25-Apr-06	44.26	1349.14	PS
NC7-48	6-Jul-06	45.59	1347.81	PS
NC7-48	6-Jul-06	45.59	1347.81	
NC7-48	2-Oct-06	46.33	1347.07	PS
NC7-48	2-Oct-06	46.33	1347.07	
NC7-49A	7-Jul-03	34.32	1359.41	
NC7-49A	7-Oct-03	34.34	1359.39	
NC7-49A	20-Jan-04	30.98	1362.75	
NC7-49A	19-Apr-04	31.76	1361.97	
NC7-49A	13-Jul-04	34.39	1359.34	
NC7-49A	14-Oct-04	34.89	1358.84	
NC7-49A	15-Jan-05	29.10	1364.63	
NC7-49A	2-Apr-05	28.55	1365.18	
NC7-49A	1-Jul-05	32.61	1361.12	
NC7-49A	10-Oct-05	32.65	1361.08	
NC7-49A	31-Jan-06	29.15	1364.58	
NC7-49A	11-Apr-06	28.90	1364.83	
NC7-49A	18-Jul-06	32.05	1361.68	
NC7-49A	17-Oct-06	32.27	1361.46	
NC7-50	17-Jul-03	73.23	1126.49	
NC7-50	4-Oct-03	73.66	1126.06	
NC7-50	8-Jan-04	74.34	1125.38	
NC7-50	14-Apr-04	74.22	1125.50	
NC7-50	15-Jul-04	73.96	1125.76	
NC7-50	7-Oct-04	73.89	1125.83	
NC7-50	5-Jan-05	74.27	1125.45	
NC7-50	5-Apr-05	74.61	1125.11	
NC7-50	5-Jul-05	73.93	1125.79	
NC7-50	4-Oct-05	73.62	1126.10	
NC7-50	16-Jan-06	73.64	1126.08	
NC7-50	3-Apr-06	73.25	1126.47	
NC7-50	19-Jul-06	72.00	1127.72	
NC7-50	17-Oct-06	71.48	1128.24	
NC7-51	1-Jul-03	35.43	1312.70	
NC7-51	1-Oct-03	36.21	1311.92	
NC7-51	8-Jan-04	34.00	1314.13	

Table A-1. Ground water elevations for monitor wells in the Pit 7 Complex measured between July 1, 2003 and December 31, 2006.

Location	Sample Date	Depth to water	Elevation	Report Note*
NC7-51	8-Apr-04	33.85	1314.28	
NC7-51	15-Jul-04	35.80	1312.33	
NC7-51	14-Oct-04	36.62	1311.51	
NC7-51	8-Jan-05	37.05	1311.08	
NC7-51	2-Apr-05	31.74	1316.39	
NC7-51	1-Jul-05	31.52	1316.61	
NC7-51	6-Oct-05	31.58	1316.55	
NC7-51	27-Jan-06	32.45	1315.68	
NC7-51	5-Apr-06	31.85	1316.28	
NC7-51	18-Jul-06	29.65	1318.48	
NC7-51	19-Oct-06	30.69	1317.44	
NC7-52	7-Jul-03	75.16	1293.19	
NC7-52	1-Oct-03	75.37	1292.98	
NC7-52	6-Jan-04	75.19	1293.16	
NC7-52	14-Apr-04	75.02	1293.33	
NC7-52	14-Jul-04	75.15	1293.20	
NC7-52	14-Oct-04	75.33	1293.02	
NC7-52	21-Jan-05	75.30	1293.05	
NC7-52	2-Apr-05	74.46	1293.89	
NC7-52	1-Jul-05	74.52	1293.83	
NC7-52	6-Oct-05	74.62	1293.73	
NC7-52	27-Jan-06	74.75	1293.60	
NC7-52	12-Apr-06	75.75	1292.60	
NC7-52	18-Jul-06	74.11	1294.24	
NC7-52	18-Oct-06	74.39	1293.96	
NC7-52A	7-Jul-03	76.15	1293.01	
NC7-52A	1-Oct-03	76.37	1292.79	
NC7-52A	6-Jan-04	76.25	1292.91	
NC7-52A	14-Apr-04	76.03	1293.13	
NC7-52A	14-Jul-04	76.15	1293.01	
NC7-52A	14-Oct-04	76.25	1292.91	
NC7-52A	21-Jan-05	76.30	1292.86	
NC7-52A	2-Apr-05	75.41	1293.75	
NC7-52A	1-Jul-05	75.55	1293.61	
NC7-52A	6-Oct-05	75.57	1293.59	
NC7-52A	27-Jan-06	75.73	1293.43	
NC7-52A	12-Apr-06	74.60	1294.56	
NC7-52A	18-Jul-06	75.35	1293.81	
NC7-52A	17-Oct-06	75.40	1293.76	
NC7-52B	7-Jul-03	73.83	1293.14	

Table A-1. Ground water elevations for monitor wells in the Pit 7 Complex measured between July 1, 2003 and December 31, 2006.

Location	Sample Date	Depth to water	Elevation	Report Note*
NC7-52B	1-Oct-03	74.10	1292.87	
NC7-52B	6-Jan-04	73.88	1293.09	
NC7-52B	14-Apr-04	73.81	1293.16	
NC7-52B	14-Jul-04	73.85	1293.12	
NC7-52B	14-Oct-04	74.02	1292.95	
NC7-52B	21-Jan-05	73.90	1293.07	
NC7-52B	2-Apr-05	73.12	1293.85	
NC7-52B	1-Jul-05	73.20	1293.77	
NC7-52B	6-Oct-05	73.18	1293.79	
NC7-52B	27-Jan-06	73.50	1293.47	
NC7-52B	12-Apr-06	73.20	1293.77	
NC7-52B	18-Jul-06	73.05	1293.92	
NC7-52B	17-Oct-06	73.00	1293.97	
NC7-53	1-Jul-03	33.41	1389.91	
NC7-53	1-Oct-03	33.45	1389.87	
NC7-53	13-Jan-04	33.08	1390.24	
NC7-53	8-Apr-04	32.50	1390.82	
NC7-53	13-Jul-04	33.33	1389.99	
NC7-53	14-Oct-04	33.33	1389.99	
NC7-53	21-Jan-05	32.20	1391.12	
NC7-53	2-Apr-05	31.02	1392.30	
NC7-53	12-Jul-05	32.90	1390.42	
NC7-53	10-Oct-05	32.83	1390.49	
NC7-53	27-Jan-06	32.30	1391.02	
NC7-53	28-Apr-06	31.48	1391.84	
NC7-53	18-Jul-06	32.35	1390.97	
NC7-53	17-Oct-06	32.27	1391.05	
NC7-53A	1-Jul-03	33.54	1389.50	
NC7-53A	1-Oct-03	33.77	1389.27	
NC7-53A	13-Jan-04	33.19	1389.85	
NC7-53A	8-Apr-04	32.70	1390.34	
NC7-53A	13-Jul-04	33.50	1389.54	
NC7-53A	14-Oct-04	33.47	1389.57	
NC7-53A	21-Jan-05	32.25	1390.79	
NC7-53A	2-Apr-05	31.39	1391.65	
NC7-53A	12-Jul-05	33.08	1389.96	
NC7-53A	10-Oct-05	33.05	1389.99	
NC7-53A	27-Jan-06	32.45	1390.59	
NC7-53A	28-Apr-06	31.80	1391.24	
NC7-53A	18-Jul-06	32.70	1390.34	

Table A-1. Ground water elevations for monitor wells in the Pit 7 Complex measured between July 1, 2003 and December 31, 2006.

Location	Sample Date	Depth to water	Elevation	Report Note*
NC7-53A	18-Oct-06	32.65	1390.39	
NC7-53B	1-Jul-03	33.93	1390.15	
NC7-53B	1-Oct-03	34.02	1390.06	
NC7-53B	13-Jan-04	33.62	1390.46	
NC7-53B	8-Apr-04	32.90	1391.18	
NC7-53B	13-Jul-04	33.81	1390.27	
NC7-53B	14-Oct-04	33.97	1390.11	
NC7-53B	21-Jan-05	32.70	1391.38	
NC7-53B	2-Apr-05	30.19	1393.89	
NC7-53B	12-Jul-05	33.30	1390.78	
NC7-53B	10-Oct-05	33.23	1390.85	
NC7-53B	27-Jan-06	32.68	1391.40	
NC7-53B	28-Apr-06	30.70	1393.38	
NC7-53B	18-Jul-06	32.60	1391.48	
NC7-53B	17-Oct-06	32.60	1391.48	
NC7-60	17-Jul-03	159.77	1167.85	
NC7-60	7-Oct-03	159.04	1168.58	
NC7-60	14-Jan-04	159.08	1168.54	
NC7-60	15-Apr-04	158.99	1168.63	
NC7-60	14-Jul-04	159.35	1168.27	
NC7-60	14-Oct-04	160.20	1167.42	
NC7-60	21-Jan-05	159.40	1168.22	
NC7-60	1-Apr-05	158.88	1168.74	
NC7-60	1-Jul-05	159.53	1168.09	
NC7-60	6-Oct-05	159.10	1168.52	
NC7-60	31-Jan-06	159.15	1168.47	
NC7-60	12-Apr-06	158.87	1168.75	
NC7-60	19-Jul-06	158.73	1168.89	
NC7-60	10-Oct-06	158.65	1168.97	
NC7-63	1-Jul-03	32.76	1316.61	
NC7-63	1-Oct-03	33.87	1315.50	
NC7-63	8-Jan-04	0.00	0.00	DRY
NC7-63	15-Apr-04	0.00	0.00	DRY
NC7-63	14-Jul-04	0.00	0.00	DRY
NC7-63	18-Oct-04	0.00	0.00	DRY
NC7-63	8-Jan-05	0.00	0.00	DRY
NC7-63	2-Apr-05	0.00		DRY
NC7-63	1-Jul-05	27.79	1321.58	
NC7-63	6-Oct-05	30.61	1318.76	DRY
NC7-63	27-Jan-06	32.00	1317.37	

Table A-1. Ground water elevations for monitor wells in the Pit 7 Complex measured between July 1, 2003 and December 31, 2006.

Location	Sample Date	Depth to water	Elevation	Report Note*
NC7-63	11-Apr-06	31.43	1317.94	
NC7-63	18-Jul-06	29.15	1320.22	
NC7-63	10-Oct-06	29.88	1319.49	
NC7-64	1-Jul-03	32.01	1316.87	
NC7-64	1-Oct-03	33.65	1315.23	
NC7-64	8-Jan-04	34.32	1314.56	
NC7-64	15-Apr-04	34.44	1314.44	
NC7-64	14-Jul-04	34.82	1314.06	
NC7-64	18-Oct-04	35.28	1313.60	
NC7-64	8-Jan-05	35.57	1313.31	
NC7-64	2-Apr-05	35.03	1313.85	
NC7-64	1-Jul-05	27.20	1321.68	
NC7-64	6-Oct-05	29.12	1319.76	
NC7-64	27-Jan-06	31.00	1317.88	
NC7-64	11-Apr-06	29.36	1319.52	
NC7-64	18-Jul-06	26.08	1322.80	
NC7-64	10-Oct-06	28.31	1320.57	
NC7-65	7-Jul-03	187.21	1264.07	
NC7-65	7-Oct-03	187.36	1263.92	
NC7-65	6-Jan-04	187.57	1263.71	
NC7-65	14-Apr-04	188.68	1262.60	
NC7-65	14-Jul-04	188.41	1262.87	
NC7-65	18-Oct-04	189.00	1262.28	
NC7-65	15-Jan-05	189.37	1261.91	
NC7-65	1-Apr-05	189.30	1261.98	
NC7-65	1-Jul-05	188.19	1263.09	
NC7-65	6-Oct-05	187.55	1263.73	
NC7-65	31-Jan-06	189.89	1261.39	
NC7-65	12-Apr-06	189.10	1262.18	
NC7-65	19-Jul-06	188.26	1263.02	
NC7-65	10-Oct-06	187.85	1263.43	
NC7-66	1-Jul-03	0.00	0.00	DRY
NC7-66	1-Oct-03	0.00	0.00	DRY
NC7-66	8-Jan-04	0.00	0.00	DRY
NC7-66	8-Apr-04	0.00	0.00	DRY
NC7-66	13-Jul-04	0.00	0.00	DRY
NC7-66	18-Oct-04	0.00	0.00	DRY
NC7-66	15-Jan-05	0.00	0.00	DRY
NC7-66	2-Apr-05	0.00		DRY
NC7-66	1-Jul-05	0.00		DRY

Table A-1. Ground water elevations for monitor wells in the Pit 7 Complex measured between July 1, 2003 and December 31, 2006.

Location	Sample Date	Depth to water	Elevation	Report Note*
NC7-66	10-Oct-05	0.00		DRY
NC7-66	27-Jan-06	0.00		DRY
NC7-66	11-Apr-06	0.00		DRY
NC7-66	18-Jul-06	0.00		DRY
NC7-66	10-Oct-06	0.00		DRY
NC7-67	1-Jul-03	31.10	1291.82	
NC7-67	1-Oct-03	31.47	1291.45	
NC7-67	8-Jan-04	31.61	1291.31	
NC7-67	7-Apr-04	31.32	1291.60	
NC7-67	14-Jul-04	31.59	1291.33	
NC7-67	18-Oct-04	31.90	1291.02	
NC7-67	7-Jan-05	31.73	1291.19	
NC7-67	2-Apr-05	30.82	1292.10	
NC7-67	1-Jul-05	30.32	1292.60	
NC7-67	10-Oct-05	30.59	1292.33	
NC7-67	27-Jan-06	30.75	1292.17	
NC7-67	12-Apr-06	30.41	1292.51	
NC7-67	18-Jul-06	30.15	1292.77	
NC7-67	10-Oct-06	30.34	1292.58	
NC7-68	1-Jul-03	29.90	1293.00	
NC7-68	1-Oct-03	31.02	1291.88	
NC7-68	8-Jan-04	31.00	1291.90	
NC7-68	7-Apr-04	30.97	1291.93	
NC7-68	14-Jul-04	30.57	1292.33	
NC7-68	18-Oct-04	31.29	1291.61	
NC7-68	7-Jan-05	31.41	1291.49	
NC7-68	1-Apr-05	29.55	1293.35	
NC7-68	1-Jul-05	29.72	1293.18	
NC7-68	10-Oct-05	30.45	1292.45	
NC7-68	27-Jan-06	30.35	1292.55	
NC7-68	12-Apr-06	29.93	1292.97	
NC7-68	18-Jul-06	29.70	1293.20	
NC7-68	10-Oct-06	30.75	1292.15	
NC7-75	1-Jul-03	48.37	1303.85	
NC7-75	1-Oct-03	48.90	1303.32	
NC7-75	8-Jan-04	49.32	1302.90	
NC7-75	8-Apr-04	49.40	1302.82	
NC7-75	14-Jul-04	49.61	1302.61	
NC7-75	18-Oct-04	49.76	1302.46	
NC7-75	8-Jan-05	49.77	1302.45	

Table A-1. Ground water elevations for monitor wells in the Pit 7 Complex measured between July 1, 2003 and December 31, 2006.

Location	Sample Date	Depth to water	Elevation	Report Note*
NC7-75	4-Apr-05	49.89	1302.33	
NC7-75	1-Jul-05	48.22	1304.00	
NC7-75	6-Oct-05	47.95	1304.27	
NC7-75	27-Jan-06	48.30	1303.92	
NC7-75	11-Apr-06	47.95	1304.27	
NC7-75	18-Jul-06	46.95	1305.27	
NC7-75	10-Oct-06	46.21	1306.01	
NC7-76	11-Jul-03	22.92	1253.96	
NC7-76	3-Oct-03	23.13	1253.75	
NC7-76	8-Jan-04	22.89	1253.99	
NC7-76	7-Apr-04	21.81	1255.07	
NC7-76	14-Jul-04	23.10	1253.78	
NC7-76	18-Oct-04	23.40	1253.48	
NC7-76	5-Jan-05	23.00	1253.88	
NC7-76	2-Apr-05	20.22	1256.66	
NC7-76	1-Jul-05	21.96	1254.92	
NC7-76	6-Oct-05	22.83	1254.05	
NC7-76	27-Jan-06	22.30	1254.58	
NC7-76	6-Apr-06	21.66	1255.22	
NC7-76	15-Jul-06	22.05	1254.83	
NC7-76	10-Oct-06	22.53	1254.35	
W-865-01	24-Jul-03	34.15	1153.51	
W-865-01	4-Oct-03	34.26	1153.40	
W-865-01	6-Jan-04	34.31	1153.35	
W-865-01	14-Apr-04	34.23	1153.43	
W-865-01	13-Jul-04	34.09	1153.57	
W-865-01	7-Oct-04	34.22	1153.44	
W-865-01	5-Jan-05	34.17	1153.49	
W-865-01	6-Apr-05	33.49	1154.17	
W-865-01	1-Jul-05	33.35	1154.31	
W-865-01	4-Oct-05	33.61	1154.05	
W-865-01	16-Jan-06	33.68	1153.98	
W-865-01	4-Apr-06	33.65	1154.01	
W-865-01	24-Jul-06	33.50	1154.16	
W-865-01	19-Oct-06	33.65	1154.01	
W-865-03	24-Jul-03	53.28	1182.70	
W-865-03	4-Oct-03	53.43	1182.55	
W-865-03	6-Jan-04	53.55	1182.43	
W-865-03	14-Apr-04	53.70	1182.28	
W-865-03	13-Jul-04	53.82	1182.16	

Table A-1. Ground water elevations for monitor wells in the Pit 7 Complex measured between July 1, 2003 and December 31, 2006.

Location	Sample Date	Depth to water	Elevation	Report Note*
W-865-03	7-Oct-04	53.97	1182.01	
W-865-03	5-Jan-05	53.99	1181.99	
W-865-03	1-Apr-05	53.70	1182.28	
W-865-03	5-Jul-05	53.75	1182.23	
W-865-03	4-Oct-05	53.87	1182.11	
W-865-03	16-Jan-06	54.09	1181.89	
W-865-03	3-Apr-06	54.15	1181.83	
W-865-03	19-Jul-06	53.90	1182.08	
W-865-03	17-Oct-06	53.95	1182.03	
W-865-04	2-Jul-03	19.79	1136.38	
W-865-04	4-Oct-03	20.25	1135.92	
W-865-04	8-Jan-04	20.64	1135.53	
W-865-04	15-Apr-04	19.96	1136.21	
W-865-04	15-Jul-04	20.67	1135.50	
W-865-04	7-Oct-04	21.00	1135.17	
W-865-04	5-Jan-05	21.21	1134.96	
W-865-04	5-Apr-05	18.49	1137.68	
W-865-04	5-Jul-05	19.10	1137.07	
W-865-04	4-Oct-05	19.86	1136.31	
W-865-04	16-Jan-06	20.28	1135.89	
W-865-04	3-Apr-06	19.85	1136.32	
W-865-04	19-Jul-06	19.62	1136.55	
W-865-04	18-Oct-06	20.25	1135.92	
W-865-06	2-Jul-03	91.65	1062.96	
W-865-06	4-Oct-03	91.82	1062.79	
W-865-06	8-Jan-04	92.35	1062.26	
W-865-06	15-Apr-04	92.25	1062.36	
W-865-06	15-Jul-04	92.37	1062.24	
W-865-06	7-Oct-04	92.61	1062.00	
W-865-06	5-Jan-05	92.76	1061.85	
W-865-06	5-Apr-05	92.78	1061.83	
W-865-06	5-Jul-05	92.52	1062.09	
W-865-06	4-Oct-05	92.92	1061.69	
W-865-06	18-Jan-06	93.25	1061.36	
W-865-06	3-Apr-06	93.17	1061.44	
W-865-06	19-Jul-06	93.07	1061.54	
W-865-06	18-Oct-06	93.25	1061.36	
W-865-07	2-Jul-03	20.65	1136.26	
W-865-07	4-Oct-03	21.16	1135.75	
W-865-07	8-Jan-04	21.46	1135.45	

Table A-1. Ground water elevations for monitor wells in the Pit 7 Complex measured between July 1, 2003 and December 31, 2006.

Location	Sample Date	Depth to water	Elevation	Report Note*
W-865-07	15-Apr-04	20.55	1136.36	
W-865-07	15-Jul-04	20.49	1136.42	
W-865-07	7-Oct-04	21.86	1135.05	
W-865-07	5-Jan-05	21.94	1134.97	
W-865-07	5-Apr-05	18.38	1138.53	
W-865-07	5-Jul-05	19.57	1137.34	
W-865-07	4-Oct-05	20.50	1136.41	
W-865-07	16-Jan-06	20.87	1136.04	
W-865-07	3-Apr-06	20.00	1136.91	
W-865-07	19-Jul-06	20.08	1136.83	
W-865-07	18-Oct-06	20.92	1135.99	
W-865-1804	4-Oct-03	104.89	1107.22	
W-865-1804	14-Apr-04	102.50	1109.61	
W-865-1804	13-Jul-04	102.69	1109.42	
W-865-1804	7-Oct-04	102.83	1109.28	
W-865-1804	15-Jan-05	102.95	1109.16	
W-865-1804	6-Apr-05	102.85	1109.26	
W-865-1804	1-Jul-05	102.87	1109.24	
W-865-1804	4-Oct-05	103.00	1109.11	
W-865-1804	30-Jan-06	103.00	1109.11	
W-865-1804	12-Apr-06	102.87	1109.24	
W-865-1804	19-Jul-06	102.88	1109.23	
W-865-1804	18-Oct-06	102.84	1109.27	
W-PIT3-01	1-Jul-03	0.00	0.00	DRY
W-PIT3-01	1-Oct-03	0.00	0.00	DRY
W-PIT3-01	8-Jan-04	0.00	0.00	DRY
W-PIT3-01	8-Apr-04	0.00	0.00	DRY
W-PIT3-01	14-Jul-04	0.00	0.00	DRY
W-PIT3-01	13-Oct-04	0.00	0.00	DRY
W-PIT3-01	8-Jan-05	0.00	0.00	DRY
W-PIT3-01	4-Apr-05	0.00		DRY
W-PIT3-01	1-Jul-05	0.00		DRY
W-PIT3-01	6-Oct-05	0.00		DRY
W-PIT3-01	27-Jan-06	0.00		DRY
W-PIT3-01	11-Apr-06	0.00		DRY
W-PIT3-01	21-Jul-06	0.00		DRY
W-PIT3-01	18-Oct-06	0.00		DRY
W-PIT3-02	1-Jul-03	0.00	0.00	DRY
W-PIT3-02	1-Oct-03	0.00	0.00	DRY
W-PIT3-02	8-Jan-04	0.00	0.00	DRY

Table A-1. Ground water elevations for monitor wells in the Pit 7 Complex measured between July 1, 2003 and December 31, 2006.

Location	Sample Date	Depth to water	Elevation	Report Note*
W-PIT3-02	8-Apr-04	0.00	0.00	DRY
W-PIT3-02	14-Jul-04	0.00	0.00	DRY
W-PIT3-02	13-Oct-04	0.00	0.00	DRY
W-PIT3-02	8-Jan-05	0.00	0.00	DRY
W-PIT3-02	4-Apr-05	0.00		DRY
W-PIT3-02	1-Jul-05	0.00		DRY
W-PIT3-02	6-Oct-05	0.00		DRY
W-PIT3-02	27-Jan-06	0.00		DRY
W-PIT3-02	11-Apr-06	0.00		DRY
W-PIT3-02	21-Jul-06	0.00		DRY
W-PIT3-02	18-Oct-06	0.00		DRY
W-PIT5-01	1-Jul-03	0.00	0.00	DRY
W-PIT5-01	1-Oct-03	0.00	0.00	DRY
W-PIT5-01	8-Jan-04	0.00	0.00	DRY
W-PIT5-01	8-Apr-04	0.00	0.00	DRY
W-PIT5-01	14-Jul-04	0.00	0.00	DRY
W-PIT5-01	13-Oct-04	0.00	0.00	DRY
W-PIT5-01	8-Jan-05	0.00	0.00	DRY
W-PIT5-01	4-Apr-05	0.00		DRY
W-PIT5-01	1-Jul-05	0.00		DRY
W-PIT5-01	6-Oct-05	0.00		DRY
W-PIT5-01	27-Jan-06	0.00		DRY
W-PIT5-01	11-Apr-06	0.00		DRY
W-PIT5-01	21-Jul-06	0.00		DRY
W-PIT5-01	10-Oct-06	0.00		DRY
W-PIT5-02	1-Jul-03	0.00	0.00	DRY
W-PIT5-02	1-Oct-03	0.00	0.00	DRY
W-PIT5-02	8-Jan-04	0.00	0.00	DRY
W-PIT5-02	8-Apr-04	0.00	0.00	DRY
W-PIT5-02	14-Jul-04	0.00	0.00	DRY
W-PIT5-02	13-Oct-04	0.00	0.00	DRY
W-PIT5-02	8-Jan-05	0.00	0.00	DRY
W-PIT5-02	4-Apr-05	0.00		DRY
W-PIT5-02	1-Jul-05	0.00		DRY
W-PIT5-02	6-Oct-05	0.00		DRY
W-PIT5-02	27-Jan-06	0.00		DRY
W-PIT5-02	28-Apr-06	0.00		DRY
W-PIT5-02	21-Jul-06	0.00		DRY
W-PIT5-02	10-Oct-06	0.00		DRY
W-PIT7-02	7-Jul-03	23.34	1294.63	

Table A-1. Ground water elevations for monitor wells in the Pit 7 Complex measured between July 1, 2003 and December 31, 2006.

Location	Sample Date	Depth to water	Elevation	Report Note*
W-PIT7-02	1-Oct-03	23.62	1294.35	
W-PIT7-02	14-Jan-04	23.49	1294.48	
W-PIT7-02	15-Apr-04	22.41	1295.56	
W-PIT7-02	13-Jul-04	23.28	1294.69	
W-PIT7-02	13-Oct-04	23.68	1294.29	
W-PIT7-02	15-Jan-05	23.65	1294.32	
W-PIT7-02	2-Apr-05	19.44	1298.53	
W-PIT7-02	12-Jul-05	21.10	1296.87	
W-PIT7-02	10-Oct-05	21.65	1296.32	
W-PIT7-02	30-Jan-06	21.65	1296.32	
W-PIT7-02	12-Apr-06	20.20	1297.77	
W-PIT7-02	18-Jul-06	19.80	1298.17	
W-PIT7-02	10-Oct-06	20.49	1297.48	
W-PIT7-03	1-Jul-03	28.58	1300.94	
W-PIT7-03	7-Oct-03	28.98	1300.54	
W-PIT7-03	8-Jan-04	27.26	1302.26	
W-PIT7-03	8-Apr-04	27.96	1301.56	
W-PIT7-03	14-Jul-04	28.75	1300.77	
W-PIT7-03	13-Oct-04	29.35	1300.17	
W-PIT7-03	8-Jan-05	29.03	1300.49	
W-PIT7-03	2-Apr-05	25.12	1304.40	
W-PIT7-03	1-Jul-05	25.46	1304.06	
W-PIT7-03	6-Oct-05	25.90	1303.62	
W-PIT7-03	30-Jan-06	25.75	1303.77	
W-PIT7-03	5-Apr-06	25.01	1304.51	
W-PIT7-03	18-Jul-06	24.40	1305.12	
W-PIT7-03	10-Oct-06	24.90	1304.62	
W-PIT7-10	7-Jul-03	25.69	1292.74	
W-PIT7-10	1-Oct-03	26.00	1292.43	
W-PIT7-10	6-Jan-04	26.06	1292.37	
W-PIT7-10	19-Apr-04	26.22	1292.21	
W-PIT7-10	19-Jul-04	26.40	1292.03	
W-PIT7-10	13-Oct-04	26.53	1291.90	
W-PIT7-10	21-Jan-05	26.65	1291.78	
W-PIT7-10	2-Apr-05	25.82	1292.61	
W-PIT7-10	1-Jul-05	28.04	1290.39	
W-PIT7-10	10-Oct-05	25.20	1293.23	
W-PIT7-10	30-Jan-06	25.55	1292.88	
W-PIT7-10	28-Apr-06	25.00	1293.43	
W-PIT7-10	19-Jul-06	24.70	1293.73	

Table A-1. Ground water elevations for monitor wells in the Pit 7 Complex measured between July 1, 2003 and December 31, 2006.

Location	Sample Date	Depth to water	Elevation	Report Note*
W-PIT7-10	10-Oct-06	24.01	1294.42	
W-PIT7-11	7-Jul-03	187.72	1264.22	
W-PIT7-11	7-Oct-03	187.93	1264.01	
W-PIT7-11	6-Jan-04	188.53	1263.41	
W-PIT7-11	14-Apr-04	189.21	1262.73	
W-PIT7-11	14-Jul-04	189.45	1262.49	
W-PIT7-11	7-Oct-04	189.52	1262.42	
W-PIT7-11	15-Jan-05	0.00	0.00	DRY
W-PIT7-11	1-Apr-05	0.00		DRY
W-PIT7-11	1-Jul-05	0.00		DRY
W-PIT7-11	6-Oct-05	188.07	1263.87	
W-PIT7-11	31-Jan-06	188.15	1263.79	
W-PIT7-11	12-Apr-06	189.65	1262.29	
W-PIT7-11	19-Jul-06	0.00		DRY
W-PIT7-11	10-Oct-06	0.00		DRY
W-PIT7-12	7-Jul-03	211.30	1205.25	
W-PIT7-12	7-Oct-03	211.47	1205.08	
W-PIT7-12	6-Jan-04	210.56	1205.99	
W-PIT7-12	14-Apr-04	211.94	1204.61	
W-PIT7-12	13-Jul-04	212.13	1204.42	
W-PIT7-12	7-Oct-04	212.01	1204.54	
W-PIT7-12	15-Jan-05	212.24	1204.31	
W-PIT7-12	1-Apr-05	212.28	1204.27	
W-PIT7-12	1-Jul-05	212.40	1204.15	
W-PIT7-12	6-Oct-05	212.42	1204.13	
W-PIT7-12	31-Jan-06	212.35	1204.20	
W-PIT7-12	12-Apr-06	212.75	1203.80	
W-PIT7-12	19-Jul-06	212.48	1204.07	
W-PIT7-12	10-Oct-06	212.56	1203.99	
W-PIT7-13	7-Jul-03	230.52	1252.02	
W-PIT7-13	7-Oct-03	230.26	1252.28	
W-PIT7-13	6-Jan-04	230.54	1252.00	
W-PIT7-13	14-Apr-04	230.59	1251.95	
W-PIT7-13	14-Jul-04	230.92	1251.62	
W-PIT7-13	7-Oct-04	230.95	1251.59	
W-PIT7-13	15-Jan-05	231.08	1251.46	
W-PIT7-13	1-Apr-05	231.12	1251.42	
W-PIT7-13	1-Jul-05	230.95	1251.59	
W-PIT7-13	6-Oct-05	230.83	1251.71	
W-PIT7-13	31-Jan-06	231.04	1251.50	

Table A-1. Ground water elevations for monitor wells in the Pit 7 Complex measured between July 1, 2003 and December 31, 2006.

Location	Sample Date	Depth to water	Elevation	Report Note*
W-PIT7-13	12-Apr-06	231.20	1251.34	
W-PIT7-13	19-Jul-06	230.95	1251.59	
W-PIT7-13	10-Oct-06	231.28	1251.26	
W-PIT7-14	7-Jul-03	300.23	1163.01	
W-PIT7-14	7-Oct-03	300.60	1162.64	
W-PIT7-14	6-Jan-04	300.68	1162.56	
W-PIT7-14	14-Apr-04	303.99	1159.25	
W-PIT7-14	13-Jul-04	303.99	1159.25	
W-PIT7-14	7-Oct-04	302.23	1161.01	
W-PIT7-14	15-Jan-05	302.05	1161.19	
W-PIT7-14	1-Apr-05	302.12	1161.12	
W-PIT7-14	1-Jul-05	298.22	1165.02	
W-PIT7-14	6-Oct-05	302.30	1160.94	
W-PIT7-14	30-Jan-06	301.72	1161.52	
W-PIT7-14	12-Apr-06	302.39	1160.85	
W-PIT7-14	19-Jul-06	301.80	1161.44	
W-PIT7-14	10-Oct-06	302.30	1160.94	
W-PIT7-15	24-Jul-03	102.90	1191.92	
W-PIT7-15	4-Oct-03	103.04	1191.78	
W-PIT7-15	6-Jan-04	103.08	1191.74	
W-PIT7-15	14-Apr-04	103.33	1191.49	
W-PIT7-15	13-Jul-04	102.39	1192.43	
W-PIT7-15	18-Oct-04	103.60	1191.22	
W-PIT7-15	15-Jan-05	103.69	1191.13	
W-PIT7-15	1-Apr-05	103.67	1191.15	
W-PIT7-15	1-Jul-05	103.56	1191.26	
W-PIT7-15	4-Oct-05	103.80	1191.02	
W-PIT7-15	18-Jan-06	103.75	1191.07	
W-PIT7-15	3-Apr-06	103.85	1190.97	
W-PIT7-15	19-Jul-06	103.77	1202.03	
W-PIT7-15	10-Oct-06	103.65	1202.15	
W-PIT7-16	11-Jul-03	20.91	1250.09	
W-PIT7-16	3-Oct-03	21.00	1250.00	
W-PIT7-16	8-Jan-04	21.01	1249.99	
W-PIT7-16	7-Apr-04	20.62	1250.38	
W-PIT7-16	14-Jul-04	20.97	1250.03	
W-PIT7-16	7-Oct-04	21.30	1249.70	
W-PIT7-16	15-Jan-05	21.17	1249.83	
W-PIT7-16	2-Apr-05	20.81	1250.19	
W-PIT7-16	1-Jul-05	20.79	1250.21	

Table A-1. Ground water elevations for monitor wells in the Pit 7 Complex measured between July 1, 2003 and December 31, 2006.

Location	Sample Date	Depth to water	Elevation	Report Note*
W-PIT7-16	6-Oct-05	21.12	1249.88	
W-PIT7-16	27-Jan-06	21.15	1249.85	
W-PIT7-16	6-Apr-06	20.85	1250.15	
W-PIT7-16	18-Jul-06	20.80	1250.20	
W-PIT7-16	10-Oct-06	21.29	1249.71	
W-PIT7-1714	1-Jul-03	97.89	1374.24	
W-PIT7-1714	1-Oct-03	98.00	1374.13	
W-PIT7-1714	12-Jan-04	98.19	1373.94	
W-PIT7-1714	14-Apr-04	98.12	1374.01	
W-PIT7-1714	13-Jul-04	98.05	1374.08	
W-PIT7-1714	7-Oct-04	98.18	1373.95	
W-PIT7-1714	15-Jan-05	98.72	1373.41	
W-PIT7-1714	2-Apr-05	98.02	1374.11	
W-PIT7-1714	11-Jul-05	98.35	1373.78	
W-PIT7-1714	10-Oct-05	98.40	1373.73	
W-PIT7-1714	27-Jan-06	98.55	1373.58	
W-PIT7-1714	11-Apr-06	98.15	1373.98	
W-PIT7-1714	18-Jul-06	98.25	1373.88	
W-PIT7-1714	10-Oct-06	98.49	1373.64	
W-PIT7-1715	1-Jul-03	49.47	1422.51	
W-PIT7-1715	1-Oct-03	49.56	1422.42	
W-PIT7-1715	12-Jan-04	49.53	1422.45	
W-PIT7-1715	14-Apr-04	49.30	1422.68	
W-PIT7-1715	13-Jul-04	49.65	1422.33	
W-PIT7-1715	18-Oct-04	49.65	1422.33	
W-PIT7-1715	15-Jan-05	49.76	1422.22	
W-PIT7-1715	2-Apr-05	47.84	1424.14	
W-PIT7-1715	11-Jul-05	48.65	1423.33	
W-PIT7-1715	10-Oct-05	48.77	1423.21	
W-PIT7-1715	27-Jan-06	48.75	1423.23	
W-PIT7-1715	11-Apr-06	48.20	1423.78	
W-PIT7-1715	18-Jul-06	48.12	1423.86	
W-PIT7-1715	10-Oct-06	48.80	1423.18	
W-PIT7-1716	1-Jul-03	37.37	1434.14	
W-PIT7-1716	1-Oct-03	37.87	1433.64	
W-PIT7-1716	12-Jan-04	38.40	1433.11	
W-PIT7-1716	14-Apr-04	38.61	1432.90	
W-PIT7-1716	13-Jul-04	38.87	1432.64	
W-PIT7-1716	7-Oct-04	38.82	1432.69	
W-PIT7-1716	15-Jan-05	39.11	1432.40	

Table A-1. Ground water elevations for monitor wells in the Pit 7 Complex measured between July 1, 2003 and December 31, 2006.

Location	Sample Date	Depth to water	Elevation	Report Note*
W-PIT7-1716	2-Apr-05	38.05	1433.46	
W-PIT7-1716	11-Jul-05	38.75	1432.76	
W-PIT7-1716	10-Oct-05	39.24	1432.27	
W-PIT7-1716	27-Jan-06	39.35	1432.16	
W-PIT7-1716	11-Apr-06	38.80	1432.71	
W-PIT7-1716	18-Jul-06	39.45	1432.06	
W-PIT7-1716	10-Oct-06	39.61	1431.90	
W-PIT7-1717	1-Jul-03	32.50	1430.02	
W-PIT7-1717	1-Oct-03	32.68	1429.84	
W-PIT7-1717	13-Jan-04	32.52	1430.00	
W-PIT7-1717	8-Apr-04	31.20	1431.32	
W-PIT7-1717	13-Jul-04	32.20	1430.32	
W-PIT7-1717	7-Oct-04	32.40	1430.12	
W-PIT7-1717	15-Jan-05	31.72	1430.80	
W-PIT7-1717	2-Apr-05	29.46	1433.06	
W-PIT7-1717	11-Jul-05	30.65	1431.87	
W-PIT7-1717	10-Oct-05	30.95	1431.57	
W-PIT7-1717	27-Jan-06	30.25	1432.27	
W-PIT7-1717	11-Apr-06	28.95	1433.57	
W-PIT7-1717	18-Jul-06	30.05	1432.47	
W-PIT7-1717	10-Oct-06	30.41	1432.11	
W-PIT7-1718	1-Jul-03	18.05	1444.10	
W-PIT7-1718	1-Oct-03	18.20	1443.95	
W-PIT7-1718	13-Jan-04	17.46	1444.69	
W-PIT7-1718	8-Apr-04	17.51	1444.64	
W-PIT7-1718	13-Jul-04	18.49	1443.66	
W-PIT7-1718	7-Oct-04	18.69	1443.46	
W-PIT7-1718	15-Jan-05	14.39	1447.76	
W-PIT7-1718	2-Apr-05	16.05	1446.10	
W-PIT7-1718	11-Jul-05	15.90	1446.25	
W-PIT7-1718	10-Oct-05	18.10	1444.05	
W-PIT7-1718	27-Jan-06	16.70	1445.45	
W-PIT7-1718	11-Apr-06	13.80	1448.35	
W-PIT7-1718	18-Jul-06	18.10	1444.05	
W-PIT7-1718	10-Oct-06	18.25	1443.90	
W-PIT7-1720	1-Jul-03	33.33	1411.90	
W-PIT7-1720	1-Oct-03	33.75	1411.48	
W-PIT7-1720	12-Jan-04	33.74	1411.49	
W-PIT7-1720	14-Apr-04	33.49	1411.74	
W-PIT7-1720	13-Jul-04	33.98	1411.25	

Table A-1. Ground water elevations for monitor wells in the Pit 7 Complex measured between July 1, 2003 and December 31, 2006.

Location	Sample Date	Depth to water	Elevation	Report Note*
W-PIT7-1720	7-Oct-04	34.04	1411.19	
W-PIT7-1720	15-Jan-05	34.06	1411.17	
W-PIT7-1720	2-Apr-05	31.37	1413.86	
W-PIT7-1720	11-Jul-05	32.00	1413.23	
W-PIT7-1720	10-Oct-05	32.37	1412.86	
W-PIT7-1720	27-Jan-06	32.45	1412.78	
W-PIT7-1720	11-Apr-06	31.15	1414.08	
W-PIT7-1720	18-Jul-06	31.30	1413.93	
W-PIT7-1720	10-Oct-06	31.58	1413.65	
W-PIT7-1721	1-Jul-03	24.83	1420.27	
W-PIT7-1721	1-Oct-03	25.11	1419.99	
W-PIT7-1721	12-Jan-04	25.41	1419.69	
W-PIT7-1721	14-Apr-04	24.79	1420.31	
W-PIT7-1721	13-Jul-04	26.00	1419.10	MUD
W-PIT7-1721	7-Oct-04	0.00	0.00	DRY
W-PIT7-1721	15-Jan-05	25.95	1419.15	DRY
W-PIT7-1721	2-Apr-05	25.82	1419.28	
W-PIT7-1721	11-Jul-05	25.55	1419.55	
W-PIT7-1721	10-Oct-05	25.70	1419.40	
W-PIT7-1721	27-Jan-06	25.75	1419.35	
W-PIT7-1721	11-Apr-06	25.75	1419.35	
W-PIT7-1721	18-Jul-06	25.52	1419.58	
W-PIT7-1721	10-Oct-06	25.76	1419.34	
W-PIT7-1722	1-Jul-03	0.00	0.00	DRY
W-PIT7-1722	1-Oct-03	0.00	0.00	DRY
W-PIT7-1722	12-Jan-04	0.00	0.00	DRY
W-PIT7-1722	14-Apr-04	0.00	0.00	DRY
W-PIT7-1722	13-Jul-04	0.00	0.00	DRY
W-PIT7-1722	7-Oct-04	0.00	0.00	DRY
W-PIT7-1722	15-Jan-05	0.00	0.00	DRY
W-PIT7-1722	2-Apr-05	0.00		DRY
W-PIT7-1722	11-Jul-05	0.00		DRY
W-PIT7-1722	10-Oct-05	0.00		DRY
W-PIT7-1722	27-Jan-06	0.00		DRY
W-PIT7-1722	11-Apr-06	0.00		DRY
W-PIT7-1722	18-Jul-06	0.00		DRY
W-PIT7-1722	10-Oct-06	0.00		DRY
W-PIT7-1723	1-Jul-03	4.59	1423.27	
W-PIT7-1723	1-Oct-03	4.90	1422.96	
W-PIT7-1723	13-Jan-04	4.36	1423.50	

Table A-1. Ground water elevations for monitor wells in the Pit 7 Complex measured between July 1, 2003 and December 31, 2006.

Location	Sample Date	Depth to water	Elevation	Report Note*
W-PIT7-1723	8-Apr-04	3.13	1424.73	
W-PIT7-1723	13-Jul-04	4.68	1423.18	
W-PIT7-1723	7-Oct-04	4.69	1423.17	
W-PIT7-1723	15-Jan-05	4.62	1423.24	
W-PIT7-1723	2-Apr-05	3.01	1424.85	
W-PIT7-1723	11-Jul-05	3.95	1423.91	
W-PIT7-1723	10-Oct-05	4.75	1423.11	
W-PIT7-1723	27-Jan-06	4.35	1423.51	
W-PIT7-1723	11-Apr-06	3.15	1424.71	
W-PIT7-1723	18-Jul-06	4.35	1423.51	
W-PIT7-1723	10-Oct-06	4.90	1422.96	
W-PIT7-1724	1-Jul-03	16.01	1412.45	
W-PIT7-1724	1-Oct-03	16.98	1411.48	
W-PIT7-1724	13-Jan-04	15.58	1412.88	
W-PIT7-1724	8-Apr-04	15.35	1413.11	
W-PIT7-1724	13-Jul-04	15.76	1412.70	
W-PIT7-1724	7-Oct-04	15.79	1412.67	
W-PIT7-1724	15-Jan-05	14.66	1413.80	
W-PIT7-1724	2-Apr-05	14.63	1413.83	
W-PIT7-1724	11-Jul-05	15.40	1413.06	
W-PIT7-1724	10-Oct-05	15.43	1413.03	
W-PIT7-1724	27-Jan-06	14.95	1413.51	
W-PIT7-1724	11-Apr-06	14.35	1414.11	
W-PIT7-1724	18-Jul-06	15.23	1413.23	
W-PIT7-1724	10-Oct-06	15.28	1413.18	
W-PIT7-1725	1-Jul-03	119.91	1300.14	
W-PIT7-1725	1-Oct-03	119.95	1300.10	
W-PIT7-1725	14-Jan-04	120.00	1300.05	
W-PIT7-1725	14-Apr-04	120.00	1300.05	
W-PIT7-1725	19-Jul-04	120.08	1299.97	
W-PIT7-1725	7-Oct-04	120.12	1299.93	
W-PIT7-1725	15-Jan-05	120.14	1299.91	
W-PIT7-1725	2-Apr-05	120.16	1299.89	
W-PIT7-1725	11-Jul-05	120.15	1299.90	
W-PIT7-1725	10-Oct-05	120.25	1299.80	
W-PIT7-1725	27-Jan-06	120.05	1300.00	
W-PIT7-1725	11-Apr-06	120.40	1299.65	
W-PIT7-1725	18-Jul-06	120.25	1299.80	
W-PIT7-1725	10-Oct-06	120.20	1299.85	
W-PIT7-1726	1-Jul-03	0.00	0.00	DRY

Table A-1. Ground water elevations for monitor wells in the Pit 7 Complex measured between July 1, 2003 and December 31, 2006.

Location	Sample Date	Depth to water	Elevation	Report Note*
W-PIT7-1726	7-Oct-03	0.00	0.00	DRY
W-PIT7-1726	13-Jan-04	0.00	0.00	DRY
W-PIT7-1726	8-Apr-04	0.00	0.00	DRY
W-PIT7-1726	13-Jul-04	0.00	0.00	DRY
W-PIT7-1726	7-Oct-04	0.00	0.00	DRY
W-PIT7-1726	15-Jan-05	0.00	0.00	DRY
W-PIT7-1726	2-Apr-05	0.00		DRY
W-PIT7-1726	11-Jul-05	0.00		DRY
W-PIT7-1726	10-Oct-05	0.00		DRY
W-PIT7-1726	27-Jan-06	0.00		DRY
W-PIT7-1726	11-Apr-06	0.00		DRY
W-PIT7-1726	18-Jul-06	0.00		DRY
W-PIT7-1726	10-Oct-06	0.00		DRY
W-PIT7-1727	1-Jul-03	0.00	0.00	DRY
W-PIT7-1727	1-Oct-03	0.00	0.00	DRY
W-PIT7-1727	13-Jan-04	0.00	0.00	DRY
W-PIT7-1727	8-Apr-04	0.00	0.00	DRY
W-PIT7-1727	13-Jul-04	0.00	0.00	DRY
W-PIT7-1727	7-Oct-04	0.00	0.00	DRY
W-PIT7-1727	15-Jan-05	0.00	0.00	DRY
W-PIT7-1727	2-Apr-05	0.00		DRY
W-PIT7-1727	11-Jul-05	0.00		DRY
W-PIT7-1727	10-Oct-05	0.00		DRY
W-PIT7-1727	27-Jan-06	0.00		DRY
W-PIT7-1727	11-Apr-06	0.00		DRY
W-PIT7-1727	18-Jul-06	0.00		DRY
W-PIT7-1727	10-Oct-06	0.00		DRY
W-PIT7-1728	1-Jul-03	0.00	0.00	DRY
W-PIT7-1728	7-Oct-03	0.00	0.00	DRY
W-PIT7-1728	12-Jan-04	0.00	0.00	DRY
W-PIT7-1728	14-Apr-04	0.00	0.00	DRY
W-PIT7-1728	13-Jul-04	0.00	0.00	DRY
W-PIT7-1728	7-Oct-04	0.00	0.00	DRY
W-PIT7-1728	15-Jan-05	0.00	0.00	DRY
W-PIT7-1728	2-Apr-05	0.00		DRY
W-PIT7-1728	11-Jul-05	0.00		DRY
W-PIT7-1728	10-Oct-05	0.00		DRY
W-PIT7-1728	27-Jan-06	0.00		DRY
W-PIT7-1728	11-Apr-06	0.00		DRY
W-PIT7-1728	18-Jul-06	0.00		DRY

Table A-1. Ground water elevations for monitor wells in the Pit 7 Complex measured between July 1, 2003 and December 31, 2006.

Location	Sample Date	Depth to water	Elevation	Report Note*
W-PIT7-1728	10-Oct-06	0.00		DRY
W-PIT7-1729	1-Jul-03	0.00	0.00	DRY
W-PIT7-1729	1-Oct-03	0.00	0.00	DRY
W-PIT7-1729	12-Jan-04	0.00	0.00	DRY
W-PIT7-1729	19-Apr-04	0.00	0.00	DRY
W-PIT7-1729	13-Jul-04	0.00	0.00	DRY
W-PIT7-1729	18-Oct-04	0.00	0.00	DRY
W-PIT7-1729	15-Jan-05	0.00	0.00	DRY
W-PIT7-1729	2-Apr-05	0.00		DRY
W-PIT7-1729	11-Jul-05	0.00		DRY
W-PIT7-1729	10-Oct-05	0.00		DRY
W-PIT7-1729	27-Jan-06	0.00		DRY
W-PIT7-1729	11-Apr-06	0.00		DRY
W-PIT7-1729	18-Jul-06	0.00		DRY
W-PIT7-1729	10-Oct-06	0.00		DRY
W-PIT7-1837	13-Jul-04	0.00	1425.00	HRZ WELL
W-PIT7-1837	18-Oct-04	22.48	1402.52	
W-PIT7-1838	13-Jul-04	0.00	1430.00	HRZ WELL
W-PIT7-1838	18-Oct-04	23.00	1407.00	
W-PIT7-1860	7-Oct-03	13.04	1433.74	
W-PIT7-1860	13-Jan-04	13.11	1433.67	
W-PIT7-1860	19-Apr-04	12.98	1433.80	
W-PIT7-1860	13-Jul-04	13.21	1433.57	
W-PIT7-1860	18-Oct-04	22.50	1424.28	
W-PIT7-1860	15-Jan-05	12.98	1433.80	
W-PIT7-1860	2-Apr-05	12.45	1434.33	
W-PIT7-1860	1-Jul-05	12.62	1434.16	
W-PIT7-1860	10-Oct-05	12.85	1433.93	
W-PIT7-1860	27-Jan-06	12.82	1433.96	
W-PIT7-1860	11-Apr-06	12.63	1434.15	
W-PIT7-1860	18-Jul-06	12.75	1434.03	
W-PIT7-1860	10-Oct-06	12.95	1433.83	
W-PIT7-1861	1-Oct-03	13.11	1403.89	
W-PIT7-1861	12-Jan-04	13.12	1403.88	
W-PIT7-1861	19-Apr-04	13.15	1403.85	
W-PIT7-1861	13-Jul-04	13.28	1403.72	
W-PIT7-1861	18-Oct-04	22.15	1394.85	
W-PIT7-1861	15-Jan-05	12.92	1404.08	
W-PIT7-1861	2-Apr-05	12.48	1404.52	
W-PIT7-1861	1-Jul-05	12.70	1404.30	

Table A-1. Ground water elevations for monitor wells in the Pit 7 Complex measured between July 1, 2003 and December 31, 2006.

Location	Sample Date	Depth to water	Elevation	Report Note*
W-PIT7-1861	10-Oct-05	12.90	1404.10	
W-PIT7-1861	27-Jan-06	12.87	1404.13	
W-PIT7-1861	11-Apr-06	12.69	1434.14	
W-PIT7-1861	18-Jul-06	12.77	1434.06	
W-PIT7-1861	10-Oct-06	12.97	1433.86	
W-PIT7-1903	1-Oct-03	22.27	1292.73	
W-PIT7-1903	12-Jan-04	21.97	1293.03	
W-PIT7-1903	7-Apr-04	21.18	1293.82	
W-PIT7-1903	14-Jul-04	21.86	1293.14	
W-PIT7-1903	18-Oct-04	22.12	1292.88	
W-PIT7-1903	7-Jan-05	22.11	1292.89	
W-PIT7-1903	2-Apr-05	18.83	1296.17	
W-PIT7-1903	1-Jul-05	19.78	1295.22	
W-PIT7-1903	10-Oct-05	20.30	1294.70	
W-PIT7-1903	27-Jan-06	20.18	1294.82	
W-PIT7-1903	12-Apr-06	19.55	1295.45	
W-PIT7-1903	18-Jul-06	19.85	1295.15	
W-PIT7-1903	10-Oct-06	20.44	1294.56	
W-PIT7-1904	1-Oct-03	22.90	1292.10	
W-PIT7-1904	12-Jan-04	22.13	1292.87	
W-PIT7-1904	7-Apr-04	21.80	1293.20	
W-PIT7-1904	14-Jul-04	22.40	1292.60	
W-PIT7-1904	18-Oct-04	22.47	1292.53	
W-PIT7-1904	7-Jan-05	22.07	1292.93	
W-PIT7-1904	2-Apr-05	19.02	1295.98	
W-PIT7-1904	1-Jul-05	20.17	1294.83	
W-PIT7-1904	10-Oct-05	20.80	1294.20	
W-PIT7-1904	27-Jan-06	20.50	1294.50	
W-PIT7-1904	12-Apr-06	19.74	1295.26	
W-PIT7-1904	18-Jul-06	20.24	1294.76	
W-PIT7-1904	10-Oct-06	20.92	1294.08	
W-PIT7-1905	1-Oct-03	22.21	1292.79	
W-PIT7-1905	12-Jan-04	21.93	1293.07	
W-PIT7-1905	7-Apr-04	21.03	1293.97	
W-PIT7-1905	14-Jul-04	21.83	1293.17	
W-PIT7-1905	18-Oct-04	22.90	1292.10	
W-PIT7-1905	7-Jan-05	22.09	1292.91	
W-PIT7-1905	2-Apr-05	19.12	1295.88	
W-PIT7-1905	1-Jul-05	20.11	1294.89	
W-PIT7-1905	10-Oct-05	20.38	1294.62	

Table A-1. Ground water elevations for monitor wells in the Pit 7 Complex measured between July 1, 2003 and December 31, 2006.

Location	Sample Date	Depth to water	Elevation	Report Note*
W-PIT7-1905	27-Jan-06	20.49	1294.51	
W-PIT7-1905	12-Apr-06	19.83	1295.17	
W-PIT7-1905	18-Jul-06	20.10	1294.90	
W-PIT7-1905	10-Oct-06	20.46	1294.54	
W-PIT7-1907	1-Oct-03	22.00	1293.00	
W-PIT7-1907	12-Jan-04	21.94	1293.06	
W-PIT7-1907	7-Apr-04	20.87	1294.13	
W-PIT7-1907	14-Jul-04	21.58	1293.42	
W-PIT7-1907	18-Oct-04	22.36	1292.64	
W-PIT7-1907	7-Jan-05	21.96	1293.04	
W-PIT7-1907	2-Apr-05	18.50	1296.50	
W-PIT7-1907	1-Jul-05	19.42	1295.58	
W-PIT7-1907	10-Oct-05	19.90	1295.10	
W-PIT7-1907	30-Jan-06	19.88	1295.12	
W-PIT7-1907	12-Apr-06	19.20	1295.80	
W-PIT7-1907	18-Jul-06	19.50	1295.50	
W-PIT7-1907	10-Oct-06	20.00	1295.00	
W-PIT7-1915	1-Oct-03	22.15	1292.85	
W-PIT7-1915	12-Jan-04	22.00	1293.00	
W-PIT7-1915	7-Apr-04	20.97	1294.03	
W-PIT7-1915	14-Jul-04	21.51	1293.49	
W-PIT7-1915	18-Oct-04	22.54	1292.46	
W-PIT7-1915	7-Jan-05	22.21	1292.79	
W-PIT7-1915	2-Apr-05	18.56	1296.44	
W-PIT7-1915	1-Jul-05	19.40	1295.60	
W-PIT7-1915	10-Oct-05	19.94	1295.06	
W-PIT7-1915	30-Jan-06	19.80	1295.20	
W-PIT7-1915	12-Apr-06	19.47	1295.53	
W-PIT7-1915	18-Jul-06	19.56	1295.44	
W-PIT7-1915	10-Oct-06	20.05	1294.95	
W-PIT7-1916	1-Oct-03	22.39	1292.61	
W-PIT7-1916	12-Jan-04	21.85	1293.15	
W-PIT7-1916	7-Apr-04	21.20	1293.80	
W-PIT7-1916	14-Jul-04	21.91	1293.09	
W-PIT7-1916	18-Oct-04	22.47	1292.53	
W-PIT7-1916	7-Jan-05	22.38	1292.62	
W-PIT7-1916	2-Apr-05	18.85	1296.15	
W-PIT7-1916	1-Jul-05	19.82	1295.18	
W-PIT7-1916	10-Oct-05	20.34	1294.66	
W-PIT7-1916	30-Jan-06	20.10	1294.90	

Table A-1. Ground water elevations for monitor wells in the Pit 7 Complex measured between July 1, 2003 and December 31, 2006.

Location	Sample Date	Depth to water	Elevation	Report Note*
W-PIT7-1916	12-Apr-06	19.60	1295.40	
W-PIT7-1916	18-Jul-06	19.90	1295.10	
W-PIT7-1916	10-Oct-06	20.56	1294.44	
W-PIT7-1917	1-Oct-03	22.85	1292.15	
W-PIT7-1917	12-Jan-04	22.52	1292.48	
W-PIT7-1917	7-Apr-04	21.62	1293.38	
W-PIT7-1917	14-Jul-04	22.23	1292.77	
W-PIT7-1917	18-Oct-04	22.90	1292.10	
W-PIT7-1917	7-Jan-05	22.82	1292.18	
W-PIT7-1917	2-Apr-05	18.90	1296.10	
W-PIT7-1917	1-Jul-05	20.01	1294.99	
W-PIT7-1917	10-Oct-05	20.59	1294.41	
W-PIT7-1917	30-Jan-06	20.40	1294.60	
W-PIT7-1917	12-Apr-06	19.82	1295.18	
W-PIT7-1917	18-Jul-06	20.05	1294.95	
W-PIT7-1917	10-Oct-06	20.68	1294.32	
W-PIT7-1918	1-Oct-03	22.20	1292.80	
W-PIT7-1918	12-Jan-04	21.83	1293.17	
W-PIT7-1918	7-Apr-04	21.09	1293.91	
W-PIT7-1918	14-Jul-04	21.80	1293.20	
W-PIT7-1918	18-Oct-04	22.36	1292.64	
W-PIT7-1918	7-Jan-05	22.12	1292.88	
W-PIT7-1918	2-Apr-05	18.58	1296.42	
W-PIT7-1918	1-Jul-05	19.70	1295.30	
W-PIT7-1918	10-Oct-05	20.27	1294.73	
W-PIT7-1918	30-Jan-06	20.15	1294.85	
W-PIT7-1918	12-Apr-06	19.37	1295.63	
W-PIT7-1918	18-Jul-06	19.77	1295.23	
W-PIT7-1918	10-Oct-06	20.26	1294.74	
W-PIT7-1919	1-Oct-03	22.40	1292.60	
W-PIT7-1919	12-Jan-04	22.01	1292.99	
W-PIT7-1919	7-Apr-04	21.21	1293.79	
W-PIT7-1919	14-Jul-04	21.97	1293.03	
W-PIT7-1919	18-Oct-04	22.54	1292.46	
W-PIT7-1919	7-Jan-05	22.32	1292.68	
W-PIT7-1919	2-Apr-05	18.70	1296.30	
W-PIT7-1919	1-Jul-05	19.67	1295.33	
W-PIT7-1919	10-Oct-05	20.35	1294.65	
W-PIT7-1919	30-Jan-06	20.20	1294.80	
W-PIT7-1919	12-Apr-06	19.61	1295.39	

Table A-1. Ground water elevations for monitor wells in the Pit 7 Complex measured between July 1, 2003 and December 31, 2006.

Location	Sample Date	Depth to water	Elevation	Report Note*
W-PIT7-1919	18-Jul-06	19.90	1295.10	
W-PIT7-1919	10-Oct-06	20.83	1294.17	
W-PIT7-2141	12-Apr-06	300.46	1153.54	
W-PIT7-2141	19-Jul-06	300.20	1162.19	
W-PIT7-2141	10-Oct-06	301.30	1163.09	

* REPORT NOTE

DRY = Well is dry.
PS = Measurement taken just before sampling.
MUD = Technician encoutered mud.
NO SHINER = Not surveyed.
HRZ WELL = Horizontal well.

Table A-2. Ground and surface water analyses for tritium (pCi/L) in samples collected from the Pit 7 Complex July 1, 2003 and December 31, 2006.

Location	Sample Date	Tritium Activity (pCi/L)
K7-01	9-Sep-03	66200±6700
K7-01	2-Dec-03	63700±6400
K7-01	21-Jan-04	65800±6600
K7-01	21-Jan-04	64600±6500
K7-01	28-Apr-04	69100±6900
K7-01	4-Aug-04	65900±6600
K7-01	2-Nov-04	66300±6700
K7-01	24-Jan-05	64600±6500
K7-01	24-Jan-05	65400±6600
K7-01	5-Apr-05	65500±6900
K7-01	11-Jul-05	61600±6700
K7-01	24-Oct-05	60600±6100
K7-01	3-Jan-06	54900±5700
K7-01	3-Jan-06	55200±5800
K7-01	13-Apr-06	56700±5700
K7-01	5-Jul-06	54500±5500
K7-01	9-Oct-06	52100±5200
K7-03	17-Sep-03	124000±12000
K7-03	9-Dec-03	107000±11000
K7-03	21-Jan-04	133000±13000
K7-03	20-Apr-04	143000±14000
K7-03	10-Aug-04	145000±15000
K7-03	29-Oct-04	159000±16000
K7-03	25-Jan-05	138000±14000
K7-03	14-Apr-05	126000±13000
K7-03	14-Apr-05	124000±13000
K7-03	12-Jul-05	137000±15000
K7-03	27-Oct-05	126000±13000
K7-03	27-Oct-05	129000±13000
K7-03	5-Jan-06	114000±12000
K7-03	24-Apr-06	104000±11000
K7-03	24-Apr-06	101000±11000
K7-03	6-Jul-06	107000±11000
K7-03	4-Oct-06	101000±11000
K7-06	5-Aug-03	<100±53
K7-06	4-Dec-03	<100±56
K7-06	27-Jan-04	<100±59
K7-06	2-Jun-04	<100±52
K7-06	2-Jun-04	<100±52
K7-06	18-Aug-04	<100±54

Table A-2. Ground and surface water analyses for tritium (pCi/L) in samples collected from the Pit 7 Complex July 1, 2003 and December 31, 2006.

Location	Sample Date	Tritium Activity (pCi/L)
K7-06	4-Nov-04	<100±54
K7-06	4-Nov-04	<100±53
K7-06	1-Feb-05	<100±55
K7-06	5-Apr-05	<100±57
K7-06	3-Aug-05	<100±56
K7-06	31-Oct-05	<100±59
K7-06	13-Jan-06	<100±58
K7-06	25-Apr-06	<100±59
K7-06	5-Jul-06	<100±55
K7-06	3-Oct-06	<100±51
K7-07	21-Apr-05	<100±57
K7-09	9-Sep-03	<100±53
K7-09	9-Sep-03	<100±53
K7-09	3-Dec-03	<100±53
K7-09	26-Jan-04	<100±57
K7-09	3-May-04	<100±53
K7-09	17-Aug-04	<100±54
K7-09	4-Nov-04	<100±54
K7-09	24-Feb-05	<100±58
K7-09	4-Apr-05	<100±59
K7-09	2-Aug-05	<100±57
K7-09	1-Nov-05	<100±55
K7-09	4-Jan-06	<100±45
K7-09	2-May-06	<100±56
K7-09	17-Jul-06	<100±58
K7-09	17-Jul-06	<100±59
K7-09	4-Oct-06	<100±59
K7-10	31-Jul-03	<100±54 L
K7-10	4-Dec-03	<100±55
K7-10	27-Jan-04	<100±59
K7-10	3-May-04	<100±55
K7-10	17-Aug-04	<100±45
K7-10	23-Nov-04	<100±50
K7-10	3-Feb-05	<100±55
K7-10	4-Apr-05	<100±57
K7-10	2-Aug-05	<100±57
K7-10	1-Nov-05	<100±55
K7-10	4-Jan-06	<100±48
K7-10	2-May-06	<100±56
K7-10	17-Jul-06	<100±57

Table A-2. Ground and surface water analyses for tritium (pCi/L) in samples collected from the Pit 7 Complex July 1, 2003 and December 31, 2006.

Location	Sample Date	Tritium Activity (pCi/L)
K7-10	3-Oct-06	<100±51
K7-10	3-Oct-06	<100±50
MUL2	21-Aug-03	<100±54
MUL2	28-Jul-04	<100±50
MUL2	2-Aug-05	<100±56
MUL2	8-Aug-06	<100±58
NC7-12	31-Aug-04	**7410±750**
NC7-12	4-Aug-05	**6880±760**
NC7-12	16-Aug-06	**5460±560**
NC7-15	9-Dec-03	**1560±180**
NC7-15	1-Jun-04	**1550±170**
NC7-15	30-Oct-04	**1780±200**
NC7-15	26-Apr-05	**1480±92.5**
NC7-15	26-Apr-05	**1280±160**
NC7-15	15-Nov-05	**1100±140**
NC7-15	17-May-06	**924±162**
NC7-15	17-May-06	**882±110**
NC7-15	17-Oct-06	**696±100**
NC7-16	3-Mar-04	**46400±4700**
NC7-16	4-Aug-05	**59000±6400**
NC7-16	15-Nov-05	**53700±5600**
NC7-16	15-Nov-05	**56600±5900**
NC7-16	31-Jan-06	**49400±5200**
NC7-16	23-May-06	**52800±5300**
NC7-16	23-May-06	**52500±5300**
NC7-16	6-Sep-06	**54200±5800**
NC7-16	17-Oct-06	**53800±5600**
NC7-17	8-Dec-04	<100±54
NC7-17	31-Oct-05	<100±57
NC7-17	1-Dec-06	<100±59
NC7-18	16-Dec-03	<100±59
NC7-18	29-Nov-04	<100±52
NC7-18	8-Dec-05	<100±56
NC7-18	28-Nov-06	<100±57
NC7-19	25-Oct-03	**8550±870**
NC7-19	11-May-04	**8200±830**
NC7-19	11-May-04	**8450±850**
NC7-19	30-Oct-04	**7820±790**
NC7-19	26-Apr-05	**8330±920**
NC7-19	26-Apr-05	**8380±920**

Table A-2. Ground and surface water analyses for tritium (pCi/L) in samples collected from the Pit 7 Complex July 1, 2003 and December 31, 2006.

Location	Sample Date	Tritium Activity (pCi/L)
NC7-19	5-Dec-05	**6600±720**
NC7-19	5-Dec-05	**6860±760**
NC7-19	1-Jun-06	**5860±600**
NC7-19	17-Oct-06	**5550±590**
NC7-20	17-Oct-03	**38700±3900**
NC7-20	1-Aug-05	**29400±3000**
NC7-20	9-Nov-05	**27500±2800**
NC7-20	14-Feb-06	**9950±369**
NC7-20	14-Feb-06	**26000±2600**
NC7-20	22-May-06	**23800±2400**
NC7-20	5-Sep-06	**82200±8900**
NC7-20	19-Oct-06	**22600±2400**
NC7-21	1-Aug-05	**98300±9900**
NC7-21	30-Nov-05	**89400±9000**
NC7-21	14-Feb-06	**85100±8600**
NC7-21	18-May-06	**87200±9100**
NC7-21	5-Sep-06	**22900±2500**
NC7-21	18-Oct-06	**82600±8900**
NC7-25	31-Jul-03	**439000±44000 L**
NC7-25	5-Dec-03	**429000±43000**
NC7-25	4-Mar-04	**437000±44000 L**
NC7-25	29-Apr-04	**425000±43000**
NC7-25	22-Jul-04	**403000±40000**
NC7-25	29-Oct-04	**401000±40000**
NC7-25	25-Jan-05	**394000±40000**
NC7-25	6-Apr-05	**370000±37000**
NC7-25	12-Jul-05	**371000±40000**
NC7-25	26-Oct-05	**398000±40000**
NC7-25	5-Jan-06	**354000±37000**
NC7-25	24-Apr-06	**342000±36000**
NC7-25	10-Jul-06	**332000±33000**
NC7-25	4-Oct-06	**328000±34000**
NC7-26	12-Sep-03	**3040±320**
NC7-26	12-Dec-03	**2880±300**
NC7-26	27-Jan-04	**2980±310**
NC7-26	29-Apr-04	**2990±310**
NC7-26	5-Aug-04	**2500±260**
NC7-26	2-Nov-04	**2920±310**
NC7-26	27-Jan-05	**2760±320**
NC7-26	6-Apr-05	**2620±280**

Table A-2. Ground and surface water analyses for tritium (pCi/L) in samples collected from the Pit 7 Complex July 1, 2003 and December 31, 2006.

Location	Sample Date	Tritium Activity (pCi/L)
NC7-26	12-Jul-05	**2670±310**
NC7-26	20-Oct-05	**2750±290**
NC7-26	10-Jan-06	**2740±290**
NC7-26	27-Apr-06	**2710±290**
NC7-26	10-Jul-06	**2830±300**
NC7-26	2-Oct-06	**2720±290**
NC7-34	4-Dec-03	**1370±160**
NC7-34	11-May-04	**577±82**
NC7-34	29-Nov-04	**877±120**
NC7-34	1-Jun-05	**1310±150**
NC7-34	1-Jun-05	**1220±140**
NC7-34	4-Aug-05	**5330±590**
NC7-34	10-Feb-06	**583±92**
NC7-34	18-Sep-06	**3610±370**
NC7-36	16-Dec-03	<100±57
NC7-36	11-May-04	<100±51
NC7-36	6-Dec-04	<222±122
NC7-36	6-Dec-04	<100±53
NC7-36	6-Dec-04	<100±53
NC7-36	1-Jun-05	<100±52
NC7-36	4-Aug-05	<100±55
NC7-36	24-Feb-06	<100±58
NC7-36	18-Sep-06	<100±54
NC7-37	4-Aug-05	**68200±7400**
NC7-37	10-Oct-05	**72100±7600**
NC7-37	5-Jun-06	**62300±6500**
NC7-37	19-Sep-06	**60700±6100**
NC7-37	28-Nov-06	**51200±5100**
NC7-40	31-Jul-03	**144000±14000**
NC7-40	31-Oct-03	**149000±15000**
NC7-40	24-Feb-04	**136000±14000**
NC7-40	10-May-04	**144000±14000**
NC7-40	30-Aug-04	**134000±2620**
NC7-40	30-Aug-04	**128000±13000**
NC7-40	30-Nov-04	**132000±13000**
NC7-40	18-Feb-05	**123000±13000**
NC7-40	8-Aug-05	**96500±1280 L**
NC7-40	8-Aug-05	**101000±11000**
NC7-40	11-Oct-05	**97300±10000**
NC7-40	8-Feb-06	**86800±8700**

Table A-2. Ground and surface water analyses for tritium (pCi/L) in samples collected from the Pit 7 Complex July 1, 2003 and December 31, 2006.

Location	Sample Date	Tritium Activity (pCi/L)
NC7-40	1-Jun-06	**77700±7800**
NC7-40	15-Aug-06	**72600±7300**
NC7-40	18-Oct-06	**74600±1940**
NC7-40	18-Oct-06	**67400±7300**
NC7-47	5-Aug-03	<100±53
NC7-47	5-Dec-03	<100±55
NC7-47	8-Mar-04	<100±52
NC7-47	26-Apr-04	118±55
NC7-47	29-Jul-04	<100±50
NC7-47	29-Jul-04	<100±49
NC7-47	28-Oct-04	<100±56
NC7-47	26-Jan-05	<100±55
NC7-47	26-Apr-05	<100±51
NC7-47	5-Jul-05	<100±130
NC7-47	5-Jul-05	<100±180
NC7-47	19-Oct-05	<100±54
NC7-47	19-Jan-06	<100±51
NC7-47	4-Apr-06	<100±55
NC7-47	6-Jul-06	<100±56
NC7-47	3-Oct-06	<100±50
NC7-48	5-Aug-03	<100±52
NC7-48	9-Dec-03	<100±55
NC7-48	9-Dec-03	<100±58
NC7-48	9-Mar-04	<100±53
NC7-48	28-Apr-04	<100±50
NC7-48	10-Aug-04	<100±58
NC7-48	2-Nov-04	<100±54
NC7-48	3-Feb-05	<100±56
NC7-48	6-Apr-05	<100±54
NC7-48	11-Jul-05	<100±58
NC7-48	20-Oct-05	<100±51
NC7-48	13-Jan-06	<100±58
NC7-48	25-Apr-06	<100±59
NC7-48	6-Jul-06	<100±56
NC7-48	2-Oct-06	<100±59
NC7-49A	31-Oct-03	<100±59
NC7-49A	6-Dec-04	<100±53
NC7-49A	15-Nov-05	<100±55
NC7-49A	13-Nov-06	<100±50
NC7-50	31-Jul-03	<100±55

Table A-2. Ground and surface water analyses for tritium (pCi/L) in samples collected from the Pit 7 Complex July 1, 2003 and December 31, 2006.

Location	Sample Date	Tritium Activity (pCi/L)
NC7-50	11-Nov-03	<100±59
NC7-50	1-Mar-04	<100±58
NC7-50	1-Mar-04	<100±57
NC7-50	19-May-04	<100±48
NC7-50	7-Sep-04	<100±54
NC7-50	29-Nov-04	<100±52
NC7-50	29-Jan-05	<100±55
NC7-50	19-May-05	<100±55
NC7-50	18-Aug-05	<100±53
NC7-50	19-Oct-05	<100±48
NC7-50	16-Jan-06	<100±58
NC7-50	10-Apr-06	<200±88.5
NC7-50	10-Apr-06	<100±56
NC7-50	23-Aug-06	<100±56
NC7-50	18-Oct-06	<100±52
NC7-51	22-Jul-03	**234000±24000 L**
NC7-51	14-Aug-03	**242000±24000**
NC7-51	11-Sep-03	**230000±23000**
NC7-51	16-Oct-03	**241000±24000**
NC7-51	13-Nov-03	**239000±24000**
NC7-51	9-Dec-03	**232000±23000**
NC7-51	21-Jan-04	**234000±24000**
NC7-51	10-Feb-04	**215000±22000**
NC7-51	10-Mar-04	**224000±23000**
NC7-51	10-May-04	**237000±24000**
NC7-51	30-Aug-04	**222000±22000**
NC7-51	18-Feb-05	**212000±22000**
NC7-51	20-May-05	**335000±34000**
NC7-51	10-Aug-05	**196000±21000**
NC7-51	10-Oct-05	**315000±33000**
NC7-51	1-Feb-06	**341000±8850**
NC7-51	1-Feb-06	**325000±33000**
NC7-51	23-May-06	**188000±19000**
NC7-51	14-Sep-06	**182000±18000**
NC7-51	5-Dec-06	**194000±3490**
NC7-51	5-Dec-06	**193000±19000**
NC7-52	31-Jul-03	**55900±5600**
NC7-52	11-Nov-03	**65500±6600**
NC7-52	3-Mar-04	**66500±6700**
NC7-52	10-Jun-04	**44500±4500**

Table A-2. Ground and surface water analyses for tritium (pCi/L) in samples collected from the Pit 7 Complex July 1, 2003 and December 31, 2006.

Location	Sample Date	Tritium Activity (pCi/L)
NC7-52	30-Aug-04	**58700±5900**
NC7-52	30-Aug-04	**48600±4900**
NC7-52	19-Nov-04	**59800±6000**
NC7-52	4-Mar-05	**52300±7900**
NC7-52	1-Jun-05	**55000±5500**
NC7-52	8-Aug-05	**56100±6100**
NC7-52	8-Aug-05	**54600±5900**
NC7-52	11-Oct-05	**51900±5400**
NC7-52	14-Feb-06	**48700±4900**
NC7-52	22-May-06	**51500±5200**
NC7-52	6-Sep-06	**43800±4700**
NC7-52	18-Oct-06	**43900±4700**
NC7-53	11-Nov-03	<100±60
NC7-53	19-Nov-04	<100±48
NC7-53	31-Oct-05	<100±58
NC7-53	6-Dec-06	<100±57
NC7-60	25-Oct-03	**1610±180**
NC7-60	19-May-04	**1650±180**
NC7-60	20-Nov-04	**1590±180**
NC7-60	23-May-05	**1670±200**
NC7-60	27-Oct-05	**1500±170**
NC7-60	1-Jun-06	**1500±170**
NC7-60	15-Nov-06	**1420±160**
NC7-63	22-Jul-03	**296000±30000 L**
NC7-63	14-Aug-03	**297000±30000**
NC7-63	8-Aug-05	**252000±27000**
NC7-63	10-Oct-05	**267000±28000**
NC7-63	1-Feb-06	**266000±27000**
NC7-63	23-May-06	**242000±24000**
NC7-63	14-Sep-06	**226000±23000**
NC7-63	4-Dec-06	**210000±21000**
NC7-64	6-Aug-03	**187000±19000**
NC7-64	11-Nov-03	**179000±18000**
NC7-64	3-Mar-04	**172000±17000**
NC7-64	11-May-04	**179000±18000**
NC7-64	31-Aug-04	**168000±17000**
NC7-64	6-Dec-04	**165000±17000**
NC7-64	3-Mar-05	**146000±16000**
NC7-64	8-Aug-05	**139000±15000**
NC7-64	10-Oct-05	**144000±15000**

Table A-2. Ground and surface water analyses for tritium (pCi/L) in samples collected from the Pit 7 Complex July 1, 2003 and December 31, 2006.

Location	Sample Date	Tritium Activity (pCi/L)
NC7-64	10-Feb-06	**16300±1800**
NC7-64	23-May-06	**149000±15000**
NC7-64	14-Sep-06	**144000±14000**
NC7-64	4-Dec-06	**142000±14000**
NC7-65	20-Aug-03	**395±71**
NC7-65	3-Dec-03	**284±66**
NC7-65	10-Mar-04	**328±63**
NC7-65	8-Aug-05	**152±62**
NC7-65	27-Oct-05	**137±61**
NC7-65	24-Feb-06	<100±61
NC7-65	1-Jun-06	**422±77**
NC7-65	6-Sep-06	**272±63**
NC7-65	30-Nov-06	**184±65**
NC7-67	13-Nov-03	**1610±180**
NC7-67	10-May-04	**1830±200**
NC7-67	18-May-05	**1680±180**
NC7-67	24-May-06	**1840±210**
NC7-68	24-May-04	**1340±150**
NC7-68	18-May-05	**1390±160**
NC7-68	24-May-06	<100±59
NC7-75	29-Aug-03	**162±58**
NC7-75	3-Dec-03	**137±58**
NC7-75	3-Mar-04	**170±59**
NC7-75	20-May-04	**226±64**
NC7-75	31-Aug-04	**122±55**
NC7-75	19-Nov-04	<100±48
NC7-75	7-Mar-05	<100±53
NC7-75	20-May-05	<100±56
NC7-75	10-Aug-05	<100±60
NC7-75	11-Oct-05	<100±56
NC7-75	16-Feb-06	<100±55
NC7-75	25-May-06	<100±56
NC7-75	14-Sep-06	<100±51
NC7-75	1-Dec-06	<100±59
NC7-76	25-Oct-03	**8920±900**
NC7-76	11-May-04	**8310±840**
NC7-76	13-Nov-04	**8240±840**
NC7-76	25-Aug-05	**4870±520**
NC7-76	8-Dec-05	**4580±490**
NC7-76	30-Jan-06	**4890±520**

Table A-2. Ground and surface water analyses for tritium (pCi/L) in samples collected from the Pit 7 Complex July 1, 2003 and December 31, 2006.

Location	Sample Date	Tritium Activity (pCi/L)
NC7-76	18-May-06	**4560±490**
NC7-76	19-Oct-06	**3860±420**
SPRING13	20-Dec-04	<100±53
SPRING13	7-Dec-05	<100±59
SPRING24	24-Sep-03	**2290±240**
SPRING24	8-Dec-03	**2380±250**
SPRING24	1-Mar-04	**2070±220**
SPRING24	8-Jun-04	**2360±250**
SPRING24	20-Nov-04	**2300±240**
SPRING24	8-Jun-05	**1960±210**
SPRING24	25-Aug-05	**2020±230**
SPRING24	5-Oct-05	**2070±230**
SPRING24	3-Feb-06	**1690±200**
SPRING24	10-Apr-06	**820±110**
SPRING24	30-Aug-06	**2070±220**
SPRING24	18-Oct-06	**1870±210**
W-865-01	6-Aug-03	<100±55
W-865-01	17-Nov-03	<100±58
W-865-01	3-Mar-04	<100±58
W-865-01	5-May-04	<100±61
W-865-01	8-Sep-04	<100±54
W-865-01	3-Nov-04	<100±54
W-865-01	29-Jan-05	<100±57
W-865-01	17-May-05	<100±51
W-865-01	24-Aug-05	<100±55
W-865-01	19-Oct-05	<100±48
W-865-01	16-Jan-06	<100±64
W-865-01	11-Apr-06	<100±58
W-865-01	14-Dec-06	<100±53
W-865-03	6-Aug-03	<100±55
W-865-03	17-Nov-03	<100±56
W-865-03	3-Mar-04	<100±60
W-865-03	5-May-04	<100±53
W-865-03	8-Sep-04	<100±51
W-865-03	2-Nov-04	<100±53
W-865-03	29-Jan-05	<100±55
W-865-03	20-May-05	<100±55
W-865-03	24-Aug-05	<100±54
W-865-03	19-Oct-05	<100±50
W-865-03	16-Jan-06	<100±41

Table A-2. Ground and surface water analyses for tritium (pCi/L) in samples collected from the Pit 7 Complex July 1, 2003 and December 31, 2006.

Location	Sample Date	Tritium Activity (pCi/L)
W-865-03	11-Apr-06	<100±56
W-865-03	19-Dec-06	<100±51
W-865-04	6-Aug-03	<100±54
W-865-04	17-Nov-03	<100±58
W-865-04	24-Feb-04	<100±50
W-865-04	5-May-04	<100±53
W-865-04	5-May-04	<100±54
W-865-04	8-Sep-04	<100±52
W-865-04	18-Nov-04	<100±48
W-865-04	29-Jan-05	<100±54
W-865-04	13-May-05	<100±55
W-865-04	18-Aug-05	<100±52
W-865-04	6-Oct-05	<100±55
W-865-04	16-Jan-06	<100±58
W-865-04	5-Apr-06	<100±52
W-865-04	18-Oct-06	<100±53
W-865-07	6-Aug-03	<100±57
W-865-07	2-Dec-03	<100±59
W-865-07	24-Feb-04	<100±51
W-865-07	5-May-04	<100±60
W-865-07	5-May-04	<100±54
W-865-07	9-Sep-04	**111±57**
W-865-07	18-Nov-04	<100±51
W-865-07	29-Jan-05	<100±56
W-865-07	13-May-05	<100±56
W-865-07	18-Aug-05	<100±52
W-865-07	6-Oct-05	<100±57
W-865-07	16-Jan-06	<100±57
W-865-07	5-Apr-06	<100±54
W-865-07	18-Oct-06	<100±52
W-865-1804	26-Aug-03	<100±54
W-865-1804	18-Dec-03	**650±90**
W-865-1804	4-Mar-04	**1270±150**
W-865-1804	9-Jun-04	**665±90**
W-865-1804	9-Sep-04	**1910±210**
W-865-1804	3-Nov-04	**555±85**
W-865-1804	10-Mar-05	**2150±240**
W-865-1804	17-May-05	**353±66**
W-865-1804	30-Aug-05	**1620±180**
W-865-1804	3-Nov-05	**2080±220**

Table A-2. Ground and surface water analyses for tritium (pCi/L) in samples collected from the Pit 7 Complex July 1, 2003 and December 31, 2006.

Location	Sample Date	Tritium Activity (pCi/L)
W-865-1804	22-Feb-06	**2090±250 O**
W-865-1804	12-Apr-06	**1000±130**
W-865-1804	8-Dec-06	**1570±170**
W-PIT7-02	6-Aug-03	<100±55
W-PIT7-02	24-Nov-03	<100±53
W-PIT7-02	3-Mar-04	<100±52
W-PIT7-02	10-May-04	<100±53
W-PIT7-02	13-Sep-04	<100±53
W-PIT7-02	1-Dec-04	<100±49
W-PIT7-02	16-Mar-05	<200±53.9
W-PIT7-02	16-Mar-05	<100±65
W-PIT7-02	7-Jun-05	<100±57
W-PIT7-02	18-Aug-05	<100±56
W-PIT7-02	30-Nov-05	<100±52
W-PIT7-02	14-Feb-06	**215±125**
W-PIT7-02	14-Feb-06	<100±51
W-PIT7-02	24-May-06	**1450±170**
W-PIT7-02	13-Sep-06	<100±51
W-PIT7-02	28-Nov-06	<100±58
W-PIT7-03	6-Aug-03	**135000±14000**
W-PIT7-03	25-Nov-03	**135000±14000**
W-PIT7-03	3-Mar-04	**141000±14000**
W-PIT7-03	10-May-04	**138000±14000**
W-PIT7-03	13-Sep-04	**144000±2810**
W-PIT7-03	13-Sep-04	**138000±14000**
W-PIT7-03	1-Dec-04	**137000±14000**
W-PIT7-03	16-Mar-05	**133000±14000**
W-PIT7-03	16-Mar-05	**136000±15000**
W-PIT7-03	18-Aug-05	**118000±1570**
W-PIT7-03	18-Aug-05	**136000±14000**
W-PIT7-03	10-Oct-05	**129000±14000**
W-PIT7-03	30-Jan-06	**148000±16000**
W-PIT7-03	30-Jan-06	**146000±15000**
W-PIT7-03	24-May-06	**135000±14000**
W-PIT7-03	13-Sep-06	**148000±15000**
W-PIT7-03	5-Dec-06	**154000±2810**
W-PIT7-03	5-Dec-06	**152000±15000**
W-PIT7-10	6-Aug-03	<100±55
W-PIT7-10	4-Dec-03	<100±52
W-PIT7-10	3-Mar-04	<100±53

Table A-2. Ground and surface water analyses for tritium (pCi/L) in samples collected from the Pit 7 Complex July 1, 2003 and December 31, 2006.

Location	Sample Date	Tritium Activity (pCi/L)
W-PIT7-10	22-May-06	<100±57
W-PIT7-10	28-Nov-06	<100±56
W-PIT7-11	16-Dec-03	**7290±740**
W-PIT7-11	27-Oct-05	**13700±1400**
W-PIT7-11	16-Feb-06	**5110±550**
W-PIT7-11	6-Sep-06	**2580±290**
W-PIT7-11	1-Dec-06	**4140±450**
W-PIT7-12	20-Aug-03	**4140±430**
W-PIT7-12	17-Dec-03	**3880±400**
W-PIT7-12	9-Mar-04	**3860±400**
W-PIT7-12	23-Aug-05	**3540±370**
W-PIT7-12	30-Nov-05	**3370±350**
W-PIT7-12	16-Feb-06	**3450±380**
W-PIT7-12	24-May-06	**3340±360**
W-PIT7-12	20-Sep-06	**3450±360**
W-PIT7-12	14-Nov-06	**3400±380**
W-PIT7-13	29-Aug-03	**81200±8200**
W-PIT7-13	3-Dec-03	**88800±8900**
W-PIT7-13	9-Mar-04	**79300±8000**
W-PIT7-13	23-Aug-05	**68300±6900**
W-PIT7-13	27-Oct-05	**69500±7300**
W-PIT7-13	21-Feb-06	**60100±6500**
W-PIT7-13	30-May-06	**62700±6600**
W-PIT7-13	6-Sep-06	**60400±6500**
W-PIT7-13	6-Dec-06	**60400±1210**
W-PIT7-13	6-Dec-06	**62100±6200**
W-PIT7-14	18-Dec-03	**101±54**
W-PIT7-14	9-Mar-04	**176±60**
W-PIT7-14	14-Jun-04	**491±83**
W-PIT7-14	13-Sep-04	**223±63**
W-PIT7-14	2-Nov-04	**212±61**
W-PIT7-14	7-Mar-05	**134±57**
W-PIT7-14	20-May-05	<100±57
W-PIT7-14	23-Aug-05	**209±58**
W-PIT7-14	24-Oct-05	**102±61**
W-PIT7-14	16-Feb-06	**115±57**
W-PIT7-14	24-May-06	**144±61**
W-PIT7-14	20-Sep-06	**143±59**
W-PIT7-14	14-Nov-06	**144±63**
W-PIT7-15	29-Aug-03	<100±52

Table A-2. Ground and surface water analyses for tritium (pCi/L) in samples collected from the Pit 7 Complex July 1, 2003 and December 31, 2006.

Location	Sample Date	Tritium Activity (pCi/L)
W-PIT7-15	4-Dec-03	<100±57
W-PIT7-15	3-Mar-04	<100±57
W-PIT7-15	12-Apr-06	<100±55
W-PIT7-15	7-Dec-06	<100±52
W-PIT7-16	29-Aug-03	<100±52
W-PIT7-16	17-Oct-03	<102±62
W-PIT7-16	9-Mar-04	<100±48
W-PIT7-16	14-Jun-04	<100±56
W-PIT7-16	14-Jun-04	<100±54
W-PIT7-16	13-Sep-04	<101±59
W-PIT7-16	30-Oct-04	<100±53
W-PIT7-16	26-Apr-05	<100±51
W-PIT7-16	15-Nov-05	**104±59**
W-PIT7-16	18-May-06	<100±58
W-PIT7-16	17-Aug-06	<100±57
W-PIT7-16	4-Dec-06	<100±51
W-PIT7-1860	7-Mar-05	<93±57
W-PIT7-1860	15-Jun-05	<100±56
W-PIT7-1860	17-Aug-05	<100±58
W-PIT7-1860	31-Oct-05	<100±57
W-PIT7-1861	7-Mar-05	<93±56
W-PIT7-1861	15-Jun-05	<100±56
W-PIT7-1861	17-Aug-05	<100±58
W-PIT7-1861	31-Oct-05	<100±57
W-PIT7-2141	16-Nov-05	**11800±1200**
W-PIT7-2141	15-May-06	**15600±1600**
W-PIT7-2141	14-Nov-06	**15500±1700**

Notes:

pCi/L = Picocuries per liter.
L = Spike accuracy not within control limits.
O = Duplicate spike or sample precision not within control limits.

Table A-3. Ground/surface water mass spectrometric analyses for uranium isotopes (pCi/L) and U235/U238 atom ratio collected from the Pit 7 Complex between July 1, 2003 and December 31, 2006.

Location	Sample Date	Uranium 235/238 (atom ratio)	Uranium 234 by mass measurement (pCi/L)	Uranium 235 by mass measurement (pCi/L)	Uranium 236 by mass measurement (pCi/L)	Uranium 238 by mass measurement (pCi/L)	Total Uranium by mass measurement (pCi/L)
K7-01	9-Sep-03	0.00314±0.000029	6.973±0.56	0.3031±0.00366	0.06631±0.00579	15.03±0.117	22.37241±0.57213
K7-01	2-Dec-03	0.00725±0.000061	13.758±0.949	0.47326±0.00557	<0.007±0.01753	10.1567±0.0837	24.38796±0.9527
K7-01	21-Jan-04	0.00715±0.000036	10.97±0.533	0.4742±0.00238	<0.00558±0	10.31495±0.000012	21.75872±0.53258
K7-01	28-Apr-04	0.00722±0.000052	10.783±0.4	0.4641±0.006	<0.00145±0	9.9889±0.1	21.23632±0.4
K7-01	4-Aug-04	0.00704±0.0002	11.494±0.694	0.504±0.023	<0.0004	11.12±0.404	23.117±0.803
K7-01	2-Nov-04	0.00724±0.00014	9.391±1.47	0.395±0.01	<0.001	8.476±0.158	18.262±1.479
K7-01	24-Jan-05	0.0073±0.000043	10±0.16	0.45±0.0036	<0.0019	9.7±0.051	20±0.16
K7-01	24-Jan-05	0.0073±0.000037	10±0.25	0.45±0.0037	<0.0018	9.6±0.063	20±0.25
K7-01	5-Apr-05	0.0074±0.0001	10±0.46	0.44±0.008	<0.0018	9.3±0.11	20±0.48
K7-01	11-Jul-05	0.00721±0.000076	11±0.22	0.45±0.0054	<0.0019	9.7±0.054	21±0.22
K7-01	24-Oct-05	0.00723±0.000063	10±0.18	0.42±0.0047	<0.0018	9.1±0.061	20±0.19
K7-01	3-Jan-06	0.00722±0.00005	7.7±0.15	0.32±0.0034	<0.0013	6.9±0.056	15±0.16
K7-01	3-Jan-06	0.0072±0.0001	8.1±0.18	0.34±0.0059	<0.0014	7.3±0.079	16±0.2
K7-01	13-Apr-06	0.00726±0.00004	9.9±0.26	0.39±0.0034	<0.0016	8.3±0.057	19±0.27
K7-01	5-Jul-06	0.00719±0.000039	9.2±0.26	0.39±0.0029	<0.0016	8.4±0.043	18±0.26
K7-01	9-Oct-06	0.00723±0.00004	8.9±0.25	0.39±0.0028	<0.0016	8.3±0.039	18±0.26
K7-03	17-Sep-03	0.00727±0.000036	4.038±0.075	0.16407±0.00171	<0.007±0.00067	3.5095±0.0322	7.71157±0.08164
K7-03	9-Dec-03	0.00724±0.000054	3.745±0.07	0.15732±0.00118	<0.00041±0	3.3815±0.000018	7.284±0.07035
K7-03	27-Jan-04	0.00668±0.000028	4.311±0.071	0.18113±0.00076	<0.00029±0	4.21797±0.000009	8.70971±0.07098
K7-03	20-Apr-04	0.00714±0.000039	3.46±0.102	0.14605±0.0008	<0.00113±0	3.18227±0.000013	6.78833±0.10201
K7-03	10-Aug-04	0.00716±0.0002	3.719±0.338	0.163±0.008	<0.0002	3.54±0.139	7.422±0.366
K7-03	29-Oct-04	0.00721±0.000072	5.334±0.35	0.237±0.004	<0.0007	5.109±0.073	10.68±0.357
K7-03	25-Jan-05	0.0073±0.000031	3.4±0.079	0.15±0.0009	<0.0006	3.1±0.014	6.7±0.08
K7-03	14-Apr-05	0.0073±0.000044	2.7±0.049	0.12±0.0015	<0.00049	2.6±0.028	5.4±0.056
K7-03	14-Apr-05	0.0073±0.000074	2.5±0.077	0.11±0.0017	<0.00045	2.4±0.026	5±0.081
K7-03	12-Jul-05	0.00713±0.00006	3.6±0.45	0.15±0.0014	<0.00087	3.3±0.011	7±0.45
K7-03	27-Oct-05	0.00708±0.000015	3.3±0.098	0.14±0.00073	<0.00061	3.2±0.015	6.6±0.099
K7-03	27-Oct-05	0.00709±0.000036	3.1±0.094	0.14±0.00074	<0.0006	3.1±0.0041	6.4±0.094
K7-03	5-Jan-06	0.00719±0.000073	3.3±0.1	0.14±0.0019	<0.0006	3.1±0.025	6.6±0.1
K7-03	24-Apr-06	0.00727±0.000037	3±0.043	0.12±0.0009	<0.00051	2.7±0.014	5.8±0.046

Table A-3. Ground/surface water mass spectrometric analyses for uranium isotopes (pCi/L) and U235/U238 atom ratio collected from the Pit 7 Complex between July 1, 2003 and December 31, 2006.

Location	Sample Date	Uranium 235/238 (atom ratio)	Uranium 234 by mass measurement (pCi/L)	Uranium 235 by mass measurement (pCi/L)	Uranium 236 by mass measurement (pCi/L)	Uranium 238 by mass measurement (pCi/L)	Total Uranium by mass measurement (pCi/L)
K7-03	24-Apr-06	0.00727±0.000058	2.2±0.064	0.095±0.0011	<0.00039	2±0.016	4.3±0.067
K7-03	6-Jul-06	0.00724±0.00003	3.1±0.088	0.13±0.00073	<0.00056	2.9±0.0099	6.1±0.089
K7-03	4-Oct-06	0.00732±0.000045	3±0.043	0.13±0.00083	<0.00052	2.7±0.0061	5.8±0.044
K7-06	2-Jun-04	0.00677±0.00015	<1.053	0.01623±0.00035	<0.01086	0.37262±0.000049	0.38884±0.00036
K7-09	3-May-04	<0.00843±0	<0.683±0	<0.00059±0	<0.00388±0	0.0109±0.0011	0.0109±0.0011
NC7-12	31-Aug-04	0.00706±0.000074	2.048±0.245	0.08±0.007	<0.007±0.00003 E	1.76±0.157	3.889±0.291
NC7-12	4-Aug-05	0.00477±0.000052	3.8±0.081	0.13±0.0019	0.013±0.000037	4.3±0.041	8.2±0.091
NC7-12	16-Aug-06	0.00671±0.000029	2.1±0.058	0.082±0.0005	<0.007±0.000036	1.9±0.0082	4±0.059
NC7-15	1-Jun-04	0.0072±0.00024	1.205±0.082	0.048±0.002	<0.0001	1.032±0.036	2.284±0.09
NC7-15	26-Apr-05	0.0072±0.00003	1.2±0.017	0.049±0.00028	<0.00037	1.054±0.0041	2.3±0.017
NC7-15	17-May-06	0.00724±0.000027	1.3±0.032	0.049±0.00024	<0.0002	1.1±0.0035	2.4±0.032
NC7-16	29-Jan-05	0.0041±0.000035	7.9±0.19	0.4±0.0036	0.055±0.000068	15±0.035	23±0.19
NC7-16	18-May-05	0.0039±0.000054	8.2±0.28	0.42±0.0087	0.066±0.00012	17±0.26	25±0.39
NC7-16	18-May-05	0.0039±0.000038	8.3±0.28	0.43±0.0066	0.067±0.00012	17±0.2	26±0.34
NC7-16	4-Aug-05	0.00411±0.000019	7.4±0.64	0.37±0.0026	0.049±0.0001	14±0.074	22±0.44
NC7-16	17-Nov-05	0.00434±0.000031	7.9±0.21	0.37±0.0049	0.045±0.000089	13±0.15	21±0.25
NC7-16	17-Nov-05	0.00427±0.000041	8.1±0.25	0.38±0.0049	0.05±0.00017	14±0.12	22±0.27
NC7-16	23-May-06	0.00415±0.000025	7.5±1.2	0.35±0.0031	0.048±0.00035	13±0.087	21±1.2
NC7-16	23-May-06	0.00425±0.00002	6.7±0.56	0.34±0.0025	0.044±0.00076	12±0.071	19±0.57
NC7-16	6-Sep-06	0.00445±0.000016	7.2±0.18	0.33±0.0016	0.04±0.000083	12±0.035	19±0.18
NC7-16	17-Oct-06	0.00432±0.000026	8.6±0.23	0.4±0.0032	0.054±0.0001	15±0.074	24±0.24
NC7-17	31-Oct-05	0.00755±0.00014	0.93±0.07	0.028±0.00061	<0.0012	0.57±0.0067	1.5±0.07
NC7-17	30-May-06	0.00719±0.000025	0.87±0.021	0.031±0.00021	<0.00013	0.67±0.0038	1.6±0.021
NC7-17	1-Dec-06	0.00728±0.000033	0.93±0.022	0.033±0.00024	<0.00014	0.71±0.004	1.7±0.023
NC7-18	16-Dec-03	0.00729±0.000034	1.483±0.046	0.06357±0.0003	<0.00025±0	1.35658±0.000011	2.90312±0.04617
NC7-18	29-Nov-04	0.00717±0.000089	1.43±0.097	0.063±0.001	<0.0003	1.376±0.023	2.869±0.099
NC7-18	8-Jun-05	0.00728±0.000048	0.82±0.025	0.036±0.00044	<0.00015	0.76±0.0079	1.6±0.026
NC7-18	8-Dec-05	0.00729±0.00004	1.1±0.016	0.047±0.00029	<0.00019	1±0.0031	2.1±0.016
NC7-18	30-May-06	0.00716±0.000003	0.72±0.011	0.031±0.000088	<0.00013	0.67±0.0019	1.4±0.011
NC7-18	28-Nov-06	0.00724±0.000033	1.1±0.032	0.047±0.00054	<0.00019	1±0.008	2.1±0.033

Table A-3. Ground/surface water mass spectrometric analyses for uranium isotopes (pCi/L) and U235/U238 atom ratio collected from the Pit 7 Complex between July 1, 2003 and December 31, 2006.

Location	Sample Date	Uranium 235/238 (atom ratio)	Uranium 234 by mass measurement (pCi/L)	Uranium 235 by mass measurement (pCi/L)	Uranium 236 by mass measurement (pCi/L)	Uranium 238 by mass measurement (pCi/L)	Total Uranium by mass measurement (pCi/L)
NC7-19	11-May-04	0.00722±0.000049	2.292±0.098	0.08893±0.00061	<0.00077±0	1.91642±0.000017	4.29755±0.09805
NC7-19	11-May-04	0.00699±0.000049	1.757±0.142	0.09137±0.00064	<0.00156	2.03176±0.000016	3.88046±0.14218
NC7-19	26-Apr-05	0.0073±0.000059	2.2±0.032	0.09±0.00092	<0.00037	1.9±0.012	4.2±0.035
NC7-19	26-Apr-05	0.0073±0.0001	2.2±0.037	0.089±0.0016	<0.00036	1.9±0.019	4.2±0.042
NC7-19	1-Jun-06	0.00721±0.000013	2.4±0.031	0.093±0.00027	<0.00039	2±0.0046	4.5±0.031
NC7-20	17-Oct-03	0.00679±0.000033	6.576±0.289	0.2241±0.00173	<0.007±0.00099	5.1363±0.0308	11.93936±0.29064
NC7-20	30-Nov-04	0.00672±0.000059	4.87±0.12	0.206±0.002	<0.007±0.00014 E	4.76±0.03	9.84±0.13
NC7-20	2-Jun-05	0.00677±0.000035	4.4±0.069	0.17±0.0015	<0.007±0.000099	4±0.029	8.6±0.074
NC7-20	22-May-06	0.0068±0.000024	4.3±0.067	0.17±0.0014	<0.007±0.00014	3.9±0.029	8.4±0.073
NC7-21	29-Nov-04	0.00668±0.000089	14.272±0.638	0.6±0.01	0.0095±0.0006	13.962±0.127	28.843±0.651
NC7-21	2-Jun-05	0.00671±0.000035	14±0.23	0.58±0.0055	0.011±0.00028	14±0.11	28±0.26
NC7-21	18-May-06	0.00667±0.000044	12±0.9	0.51±0.0042	0.01±0.0013	12±0.06	25±0.9
NC7-25	31-Jul-03	0.0072±0.000082	20.691±0.567	0.67967±0.00929	<0.007±0.00563	14.672±0.111	36.04267±0.57784
NC7-25	5-Dec-03	0.00719±0.000049	18.602±0.431	0.66662±0.00453	<0.0025±0	14.42063±0.000016	33.68922±0.43092
NC7-25	4-Mar-04	0.00724±0.000064	17.526±2.702	0.62128±0.00547	<0.0316±0	13.34258±0.000021	31.49008±2.70182
NC7-25	29-Apr-04	0.00706±0.000028	18.755±0.348	0.6926±0.00275	<0.00153±0	15.25117±0.000009	34.69842±0.34839
NC7-25	6-Apr-05	0.00735±0.000096	17±0.24	0.67±0.0094	<0.00027	14±0.078	32±0.25
NC7-25	12-Jul-05	0.00707±0.000033	18±0.47	0.7±0.0042	<0.003	15±0.061	34±0.47
NC7-25	26-Oct-05	0.00726±0.000052	17±0.24	0.62±0.0065	<0.0026	13±0.1	30±0.26
NC7-25	5-Jan-06	0.00727±0.000071	18±0.42	0.67±0.0091	<0.0028	14±0.14	33±0.44
NC7-25	24-Apr-06	0.00725±0.000029	18±0.23	0.66±0.0042	<0.0027	14±0.071	33±0.24
NC7-25	10-Jul-06	0.00724±0.000033	18±0.25	0.69±0.0049	<0.0029	15±0.08	34±0.26
NC7-25	4-Oct-06	0.00726±0.000033	18±0.68	0.69±0.0046	<0.0029	15±0.071	33±0.68
NC7-26	8-Dec-03	0.00722±0.00011	0.156±0.033	0.00504±0.000077	<0.00033±0	0.10854±0.000037	0.26931±0.0332
NC7-26	29-Apr-04	<0.00819±0	<0.745±0	<0.00481±0	<0.00858±0	0.09139±0.00275	0.09139±0.00275
NC7-26	14-Apr-05	0.00725±0.000091	0.72±0.017	0.025±0.00036	<0.0001	0.53±0.0041	1.3±0.017
NC7-26	12-Jul-05	0.00726±0.000025	0.15±0.0051	0.0047±0.000023	<0.000055	0.1±0.00036	0.25±0.0051
NC7-26	20-Oct-05	0.00741±0.000064	0.1±0.013	0.0028±0.000029	<0.00017	0.059±0.00033	0.17±0.013
NC7-26	10-Jan-06	0.00718±0.000054	0.11±0.0026	0.0038±0.000035	<0.000065	0.081±0.00044	0.2±0.0027
NC7-26	27-Apr-06	0.00722±0.000076	0.14±0.0077	0.0047±0.000055	<0.000028	0.1±0.00052	0.25±0.0077

Table A-3. Ground/surface water mass spectrometric analyses for uranium isotopes (pCi/L) and U235/U238 atom ratio collected from the Pit 7 Complex between July 1, 2003 and December 31, 2006.

Location	Sample Date	Uranium 235/238 (atom ratio)	Uranium 234 by mass measurement (pCi/L)	Uranium 235 by mass measurement (pCi/L)	Uranium 236 by mass measurement (pCi/L)	Uranium 238 by mass measurement (pCi/L)	Total Uranium by mass measurement (pCi/L)
NC7-26	10-Jul-06	0.00732±0.000057	0.17±0.02	0.0044±0.000065	<0.00073	0.094±0.0012	0.27±0.02
NC7-26	2-Oct-06	0.00735±0.00005	0.18±0.006	0.0058±0.000067	<0.000036	0.12±0.0011	0.31±0.0061
NC7-34	24-Feb-04	0.00383±0.000032	3.567±0.266	0.1492±0.00126	0.02332±0.00041	6.05093±0.000011	9.79078±0.26593
NC7-34	11-May-04	0.00443±0.000052	3.025±0.4	0.14207±0.002	0.01934±0.0003	4.98606±0.05	8.17207±0.4
NC7-34	30-Aug-04	0.00429±0.000051	3.515±0.576	0.159±0.003	0.0205±0.0009	5.759±0.082	9.454±0.582
NC7-34	29-Nov-04	0.00411±0.000065	2.666±0.614	0.138±0.003	0.0216±0.0007	5.219±0.068	8.045±0.618
NC7-34	29-Jan-05	0.0041±0.000013	3±0.06	0.12±0.00068	0.018±0.00002	4.7±0.021	7.8±0.064
NC7-34	1-Jun-05	0.00339±0.000017	9±0.3	0.43±0.0038	0.095±0.0001	20±0.14	29±0.33
NC7-34	1-Jun-05	0.00333±0.000026	9.4±0.33	0.45±0.0054	0.099±0.00012	21±0.19	31±0.38
NC7-34	4-Aug-05	0.00371±0.000016	6.8±0.19	0.29±0.0017	0.05±0.000051	12±0.048	19±0.2
NC7-34	22-Nov-05	0.00392±0.00003	4.5±0.09	0.18±0.0023	0.029±0.000033	7.3±0.071	12±0.11
NC7-34	22-Nov-05	0.00394±0.000031	4.5±0.14	0.18±0.0019	0.029±0.000031	7.2±0.05	12±0.14
NC7-34	10-Feb-06	0.00463±0.000022	3.3±0.068	0.13±0.00074	0.013±0.000036	4.4±0.013	7.8±0.069
NC7-34	6-Jun-06	0.00384±0.000022	4.9±0.13	0.2±0.0015	0.033±0.00005	8.1±0.037	13±0.13
NC7-34	6-Jun-06	0.00344±0.000024	6.5±0.21	0.31±0.0031	0.062±0.000079	14±0.1	21±0.24
NC7-34	18-Sep-06	0.00328±0.000023	7.3±0.24	0.33±0.0027	0.079±0.000079	16±0.061	23±0.25
NC7-34	1-Dec-06	0.00437±0.000025	3.9±0.17	0.15±0.00096	0.018±0.000042	5.4±0.013	9.5±0.17
NC7-36	11-May-04	0.00728±0.000046	1.043±0.073	0.03825±0.00024	<0.00069±0	0.81658±0.000015	1.89793±0.07324
NC7-36	1-Jun-05	0.0071±0.0001	0.98±0.019	0.037±0.00077	<0.00016	0.82±0.012	1.8±0.022
NC7-36	4-Aug-05	0.0072±0.000023	1.1±0.014	0.039±0.00018	<0.00037	0.85±0.0029	1.9±0.014
NC7-36	18-Sep-06	0.00723±0.000013	1.2±0.03	0.043±0.00036	<0.00018	0.93±0.0075	2.2±0.031
NC7-37	5-Jun-06	0.00315±0.000012	9.8±0.4	0.52±0.0032	0.12±0.000098	26±0.12	36±0.42
NC7-37	28-Nov-06	0.00311±0.000026	9.9±0.8	0.53±0.0048	0.12±0.00015	26±0.089	37±0.81
NC7-40	11-Jul-03	0.00314±0.000024	34.599±2.778	1.50789±0.01537	0.34333±0.01449	74.583±0.504	111.03322±2.82343
NC7-40	8-Aug-03	0.00308±0.000035	39.647±3.055	1.6281±0.01989	0.39404±0.03157	82.176±0.37	123.84514±3.07755
NC7-40	5-Sep-03	0.00726±0.0001	63.196±5.694	2.37437±0.04055	<0.007±0.0585	50.831±0.504	116.40137±5.71641
NC7-40	10-Oct-03	0.00312±0.000029	34.667±2.911	1.56026±0.02172	0.3434±0.03007	77.842±0.806	114.41266±3.02075
NC7-40	31-Oct-03	0.00313±0.000009	36.224±1.456	1.57367±0.0077	0.37442±0.01505	78.085±0.309	116.25709±1.48852
NC7-40	7-Nov-03	0.00305±0.000014	37.435±1.57	1.65024±0.01095	0.40306±0.0323	84.057±0.403	123.5453±1.62126
NC7-40	12-Dec-03	0.00311±0.000016	27.698±1.666	1.59161±0.00818	0.37895±0.00099	79.47722±0.000005	109.14578±1.6657

Table A-3. Ground/surface water mass spectrometric analyses for uranium isotopes (pCi/L) and U235/U238 atom ratio collected from the Pit 7 Complex between July 1, 2003 and December 31, 2006.

Location	Sample Date	Uranium 235/238 (atom ratio)	Uranium 234 by mass measurement (pCi/L)	Uranium 235 by mass measurement (pCi/L)	Uranium 236 by mass measurement (pCi/L)	Uranium 238 by mass measurement (pCi/L)	Total Uranium by mass measurement (pCi/L)
NC7-40	9-Jan-04	0.00313±0.000018	28.319±3.016	1.56469±0.00915	0.36157±0.00379	77.78281±0.000006	108.02787±3.0161
NC7-40	6-Feb-04	0.00319±0.000023	29.958±3.232	1.56596±0.0115	0.36306±0.0055	76.29975±0.000008	108.18717±3.23252
NC7-40	4-Mar-04	0.00306±0.000016	29.027±1.321	1.60337±0.00848	0.36656±0.0006	81.38052±0.000005	112.37779±1.32128
NC7-40	10-May-04	0.00315±0.000031	29.3±2	1.57986±0.019	0.34908±0.002	77.9483±0.6	109.1772±2
NC7-40	30-Nov-04	0.00323±0.000054	30.3±1.8	1.499±0.028	0.3369±0.001	72.2±0.6	104.4±1.9
NC7-40	18-Feb-05	0.0031±0.000021	41±1.4	2.2±0.02	0.56±0.00038	110±0.65	160±1.5
NC7-40	8-Aug-05	0.00313±0.00003	22±0.92	1.2±0.013	0.27±0.00033	60±0.23	84±0.95
NC7-40	11-Oct-05	0.00312±0.00003	23±1	1.2±0.018	0.3±0.00038	62±0.66	86±1.2
NC7-40	8-Feb-06	0.00319±0.000034	21±0.91	1.2±0.017	0.26±0.00035	56±0.58	79±1.1
NC7-40	1-Jun-06	0.00322±0.00002	19±0.7	0.95±0.0069	0.22±0.00016	46±0.18	66±0.72
NC7-40	15-Aug-06	0.00319±0.000024	17±0.69	0.92±0.0082	0.21±0.00024	45±0.22	63±0.72
NC7-40	18-Oct-06	0.00313±0.000007	20±0.88	1.2±0.0054	0.29±0.00029	57±0.23	79±0.91
NC7-47	26-Apr-04	0.00725±0.000042	1.283±0.084	0.02942±0.00017	<0.00063±0	0.63116±0.000014	1.94384±0.08416
NC7-47	26-Apr-05	0.00722±0.000038	1.3±0.032	0.03±0.00032	<0.00012	0.6425±0.0061	2±0.032
NC7-47	7-Jul-05	0.00708±0.000023	1.2±0.028	0.028±0.0001	<0.00012	0.61±0.001	1.8±0.028
NC7-47	7-Jul-05	0.00336±0.000019	9.5±0.14	0.43±0.003	0.096±0.000071	20±0.081	30±0.16
NC7-47	19-Oct-05	0.00712±0.000021	1.2±0.019	0.028±0.00011	<0.00012	0.6±0.0017	1.8±0.019
NC7-47	19-Jan-06	0.00711±0.00002	1.2±0.02	0.028±0.00011	<0.00012	0.61±0.0017	1.9±0.02
NC7-47	4-Apr-06	0.00722±0.00003	1.3±0.012	0.028±0.00017	<0.00012	0.61±0.0026	1.9±0.012
NC7-47	6-Jul-06	0.00731±0.000058	1.3±0.041	0.03±0.00036	<0.00032	0.65±0.0058	2±0.042
NC7-47	3-Oct-06	0.00729±0.00002	1.2±0.018	0.028±0.000094	<0.00011	0.6±0.0011	1.9±0.018
NC7-48	5-Aug-03	0.00284±0.000022	4.59±0.68	0.16745±0.00148	0.03866±0.00527	9.1623±0.0386	13.95841±0.68112
NC7-48	17-Dec-03	0.0029±0.000022	2.42±0.426	0.12663±0.00095	0.03023±0.00035	6.7974±0.000007	9.37404±0.42555
NC7-48	9-Mar-04	0.00273±0.000016	3.531±0.239	0.20848±0.0012	0.05166±0.00015	11.88953±0.000005	15.68097±0.23948
NC7-48	28-Apr-04	0.00275±0.000023	3.548±0.4	0.20364±0.002	0.04895±0.00017	11.50618±0.09	15.30689±0.4
NC7-48	10-Aug-04	0.00285±0.000037	2.28±0.44	0.135±0.003	0.0381±0.0013	7.335±0.098	9.788±0.451
NC7-48	2-Nov-04	0.00291±0.000029	2.64±0.18	0.138±0.0016	0.03436±0.00011	7.39±0.05	10.2±0.19
NC7-48	3-Feb-05	0.0028±0.000024	3.3±0.14	0.19±0.002	0.053±0.000038	11±0.059	15±0.15
NC7-48	6-Apr-05	0.00272±0.000016	4.2±0.23	0.25±0.0041	0.067±0.000091	14.38±0.22	19±0.31
NC7-48	11-Jul-05	0.00724±0.000026	1.4±0.018	0.052±0.00024	<0.00022	1.1±0.0033	2.6±0.018

Table A-3. Ground/surface water mass spectrometric analyses for uranium isotopes (pCi/L) and U235/U238 atom ratio collected from the Pit 7 Complex between July 1, 2003 and December 31, 2006.

Location	Sample Date	Uranium 235/238 (atom ratio)	Uranium 234 by mass measurement (pCi/L)	Uranium 235 by mass measurement (pCi/L)	Uranium 236 by mass measurement (pCi/L)	Uranium 238 by mass measurement (pCi/L)	Total Uranium by mass measurement (pCi/L)
NC7-48	20-Oct-05	0.00284±0.000043	2.5±0.068	0.14±0.0023	0.035±0.000054	7.6±0.055	10±0.088
NC7-48	13-Jan-06	0.00283±0.000031	2.2±0.1	0.12±0.0016	0.031±0.000042	6.6±0.051	9±0.11
NC7-48	25-Apr-06	0.00276±0.000029	2.6±0.13	0.15±0.002	0.039±0.000046	8.2±0.073	11±0.15
NC7-48	6-Jul-06	0.00282±0.000028	1.5±0.01	0.087±0.001	0.022±0.000027	4.8±0.032	6.4±0.033
NC7-48	2-Oct-06	0.0028±0.000023	1.9±0.079	0.093±0.00081	0.024±0.000028	5.2±0.016	7.1±0.08
NC7-49A	31-Oct-03	0.00722±0.000014	0.884±0.02	0.02513±0.00009	<0.007±0.0001	0.54146±0.00165	1.45059±0.02007
NC7-49A	6-Dec-04	0.00727±0.000059	0.85±0.02	0.026±0.0003	<0.00011	0.563±0.005	1.44±0.02
NC7-49A	15-Nov-05	0.00737±0.00016	0.78±0.046	0.023±0.00057	<0.00035	0.48±0.0062	1.3±0.046
NC7-49A	13-Nov-06	0.00726±0.000023	0.85±0.017	0.026±0.000096	<0.00011	0.56±0.0011	1.4±0.017
NC7-50	11-Nov-03	0.00717±0.000024	1.587±0.057	0.04584±0.00045	<0.007±0.00057	0.99471±0.00921	2.62755±0.05774
NC7-50	1-Mar-04	0.00714±0.000076	<2.459±0	0.04396±0.00047	<0.00845±0	0.95724±0.000026	1.0012±0.00047
NC7-50	1-Mar-04	0.00731±0.000036	1.6±0.04	0.04727±0.0006	<0.00024±0	1.00555±0.012	2.65263±0.04
NC7-50	19-May-04	0.007±0.000089	<0.893	0.04933±0.00063	<0.00904	1.09575±0.00003	1.14508±0.00063
NC7-50	7-Sep-04	0.00725±0.000063	1.722±0.067	0.052±0.001	<0.0001	1.114±0.015	2.889±0.068
NC7-50	29-Nov-04	0.00721±0.000041	1.67±0.04	0.051±0.0004	<0.0002	1.104±0.004	2.83±0.04
NC7-50	29-Jan-05	0.0073±0.00003	1.7±0.032	0.052±0.00053	<0.00021	1.1±0.01	2.9±0.034
NC7-50	19-May-05	0.00726±0.000087	1.9±0.065	0.059±0.0012	<0.00024	1.3±0.02	3.2±0.068
NC7-50	18-Aug-05	0.0074±0.00014	2±0.066	0.059±0.0014	<0.00029	1.2±0.018	3.3±0.069
NC7-50	19-Oct-05	0.00743±0.00011	2.2±0.25	0.06±0.0012	<0.0016	1.2±0.018	3.5±0.25
NC7-50	16-Jan-06	0.00734±0.000082	2.1±0.063	0.064±0.00074	<0.00037	1.3±0.0044	3.6±0.063
NC7-50	10-Apr-06	0.00736±0.000082	2.1±0.1	0.063±0.00075	<0.00026	1.3±0.005	3.5±0.1
NC7-50	23-Aug-06	0.00735±0.000074	2.1±0.12	0.063±0.00071	<0.00041	1.3±0.007	3.5±0.12
NC7-50	18-Oct-06	0.0073±0.000053	2.1±0.082	0.063±0.00056	<0.00036	1.3±0.0069	3.5±0.083
NC7-51	14-Aug-03	0.00457±0.000033	42.188±2.898	1.51781±0.01688	0.16848±0.02977	51.671±0.437	95.54529±2.93096
NC7-51	16-Oct-03	0.00469±0.000034	46.765±3.133	1.69013±0.01656	0.17187±0.0108	56.005±0.37	104.632±3.15483
NC7-51	21-Jan-04	0.005±0.000041	37.251±2.59	1.5442±0.01256	0.1205±0.00267	48.02115±0.000014	86.93676±2.59051
NC7-51	10-May-04	0.00479±0.000032	33.701±1	1.44333±0.014	0.13402±0.0009	46.89937±0.3	82.17802±1.1
NC7-51	30-Aug-04	0.00479±0.000022	36.413±3.36	1.633±0.014	0.1795±0.0014	52.996±0.389	91.222±3.382
NC7-51	18-Feb-05	0.0049±0.000023	43±0.78	1.8±0.017	0.17±0.00033	57±0.45	100±0.91
NC7-51	20-May-05	0.00455±0.000029	30±0.76	1.4±0.016	0.16±0.00034	46±0.44	78±0.88

Table A-3. Ground/surface water mass spectrometric analyses for uranium isotopes (pCi/L) and U235/U238 atom ratio collected from the Pit 7 Complex between July 1, 2003 and December 31, 2006.

Location	Sample Date	Uranium 235/238 (atom ratio)	Uranium 234 by mass measurement (pCi/L)	Uranium 235 by mass measurement (pCi/L)	Uranium 236 by mass measurement (pCi/L)	Uranium 238 by mass measurement (pCi/L)	Total Uranium by mass measurement (pCi/L)
NC7-51	10-Aug-05	0.00519±0.00005	35±0.74	1.5±0.019	0.12±0.00041	45±0.38	81±0.83
NC7-51	10-Oct-05	0.00522±0.00003	36±0.69	1.5±0.011	0.11±0.00028	44±0.23	81±0.73
NC7-51	23-May-06	0.00541±0.000065	37±2.7	1.5±0.021	0.11±0.004	45±0.28	83±2.7
NC7-51	14-Sep-06	0.00551±0.000022	39±0.67	1.5±0.0076	0.099±0.00047	43±0.13	84±0.68
NC7-51	5-Dec-06	0.00537±0.000027	38±1.4	1.6±0.01	0.1±0.00054	46±0.19	85±1.4
NC7-52	11-Nov-03	0.00717±0.000035	0.73±0.048	0.02385±0.00016	<0.007±0.0003	0.51735±0.00225	1.2712±0.04805
NC7-52	10-Jun-04	0.00727±0.00009	0.634±0.053	0.022±0	<0.007E	0.478±0.006	1.134±0.053
NC7-52	1-Jun-05	0.00727±0.000064	0.36±0.005	0.013±0.00015	<0.000055	0.28±0.002	0.65±0.0054
NC7-52	22-May-06	0.00713±0.000028	0.72±0.0094	0.027±0.00014	<0.00011	0.59±0.0019	1.3±0.0096
NC7-53	11-Nov-03	0.00725±0.000035	0.59±0.038	0.02351±0.00027	<0.007±0.00029	0.50431±0.00521	1.11782±0.03836
NC7-53	19-Nov-04	0.00727±0.000053	0.47±0.02	0.01844±0.00019	<0.0001	0.394±0.003	0.88±0.02
NC7-53	31-Oct-05	0.00728±0.000019	0.54±0.017	0.022±0.000073	<0.00015	0.46±0.00099	1±0.017
NC7-53	6-Dec-06	0.00724±0.000039	0.61±0.0087	0.025±0.00016	<0.0001	0.53±0.0019	1.2±0.0089
NC7-60	19-May-04	0.00715±0.00011	<0.331	0.0192±0.00028	<0.00321	0.41763±0.000036	0.43683±0.00029
NC7-60	23-May-05	0.0072±0.000069	0.6±0.013	0.019±0.00023	<0.00012	0.41±0.0031	1±0.014
NC7-60	1-Jun-06	0.00715±0.000021	0.59±0.0065	0.018±0.000095	<0.007±0.000022	0.39±0.0017	1±0.0067
NC7-63	8-Aug-05	0.00355±0.000027	52±3.5	2.6±0.021	0.51±0.00063	110±0.32	170±3.5
NC7-63	10-Oct-05	0.00355±0.000028	54±1.7	2.5±0.023	0.53±0.00062	110±0.54	170±1.8
NC7-63	1-Feb-06	0.00347±0.000024	52±1.7	2.5±0.026	0.52±0.00062	110±0.86	160±1.9
NC7-63	23-May-06	0.00366±0.000019	49±1.6	2.3±0.031	0.47±0.00042	100±1.2	150±2
NC7-63	14-Sep-06	0.00368±0.000033	48±1.4	2.2±0.022	0.42±0.00035	93±0.38	140±1.5
NC7-63	4-Dec-06	0.00371±0.000035	44±2.7	2.1±0.024	0.38±0.00052	87±0.6	130±2.7
NC7-64	6-Aug-03	0.00504±0.000052	49.44±3.896	1.69315±0.02181	0.1503±0.03008	52.242±0.403	103.5255±3.917
NC7-64	11-Nov-03	0.00518±0.000028	49.122±1.902	1.69607±0.01192	0.14646±0.01954	50.908±0.229	101.87253±1.91587
NC7-64	3-Mar-04	0.00526±0.000041	39.308±8.782	1.6538±0.01279	<0.10805±0	48.9309±0.000014	89.89255±8.78154
NC7-64	11-May-04	0.00524±0.000033	40.369±3	1.70131±0.017	0.12707±0.0008	50.47787±0.4	92.67499±3
NC7-64	31-Aug-04	0.00531±0.000067	41.667±3.058	1.726±0.034	0.1238±0.0027	50.58±0.762	94.097±3.151
NC7-64	6-Dec-04	0.00543±0.000036	39.9±1.8	1.675±0.016	0.1207±0.0013	48±0.3	89.7±1.8
NC7-64	3-Mar-05	0.0056±0.000022	40±0.62	1.6±0.012	0.11±0.00073	46±0.28	87±0.68
NC7-64	8-Aug-05	0.00575±0.00001	40±2	1.7±0.0081	0.075±0.00044	45±0.2	86±2.1

Table A-3. Ground/surface water mass spectrometric analyses for uranium isotopes (pCi/L) and U235/U238 atom ratio collected from the Pit 7 Complex between July 1, 2003 and December 31, 2006.

Location	Sample Date	Uranium 235/238 (atom ratio)	Uranium 234 by mass measurement (pCi/L)	Uranium 235 by mass measurement (pCi/L)	Uranium 236 by mass measurement (pCi/L)	Uranium 238 by mass measurement (pCi/L)	Total Uranium by mass measurement (pCi/L)
NC7-64	10-Oct-05	0.00567±0.000026	38±0.69	1.6±0.012	0.085±0.00054	43±0.26	83±0.74
NC7-64	10-Feb-06	0.00524±0.000025	38±0.74	1.6±0.01	0.11±0.00051	47±0.19	87±0.76
NC7-64	23-May-06	0.00548±0.00003	38±0.82	1.6±0.02	0.14±0.0034	46±0.51	87±0.96
NC7-64	14-Sep-06	0.00549±0.000013	41±1.5	1.7±0.0071	0.11±0.00053	48±0.17	91±1.5
NC7-64	4-Dec-06	0.00554±0.000024	41±2.2	1.7±0.012	0.096±0.00039	48±0.28	90±2.2
NC7-65	3-Dec-03	0.00728±0.000042	2.36±0.125	0.07732±0.00085	<0.007±0.00127	1.6514±0.0154	4.08872±0.12595
NC7-65	1-Nov-04	0.00722±0.00004	1.18±0.04	0.0438±0.0004	<0.00018	0.942±0.006	2.17±0.04
NC7-65	27-Oct-05	0.00711±0.000028	1.1±0.027	0.04±0.00017	<0.00017	0.88±0.0014	2±0.027
NC7-65	1-Dec-06	0.00727±0.000043	0.96±0.024	0.036±0.00032	<0.00015	0.77±0.0051	1.8±0.025
NC7-67	13-Nov-03	<0.00971±0	<0.027±0	<0.000015±0	<0.00007±0	0.00024±0.00326	<0.06273±0.00326
NC7-67	10-May-04	<0.00752±0	<0.758±0	<0.00253±0	<0.0045±0	0.05226±0.013	0.05226±0.013
NC7-67	18-May-05	0.00602±0.000059	9±0.35	0.22±0.0026	<0.013	5.7±0.04	15±0.35
NC7-67	24-May-06	0.00679±0.000081	<0.062±0.0052	0.0012±0.000015	<0.007±0.000024	0.028±0.00012	0.09±0.0052
NC7-68	24-May-04	0.00726±0.000087	0.894±0.223	0.041±0.001	<0.0002	0.881±0.011	1.816±0.224
NC7-68	18-May-05	0.00725±0.000048	1±0.016	0.039±0.00046	<0.00016	0.84±0.0082	1.9±0.018
NC7-68	24-May-06	0.00722±0.000022	0.24±0.0073	0.0071±0.000032	<0.007±0.0000096	0.15±0.00052	0.4±0.0073
NC7-75	3-Dec-03	0.00704±0.00011	<0.062±0.276	0.00405±0.00012	<0.007±0.00185	0.08945±0.00223	0.0935±0.00223
NC7-75	20-May-04	0.00669±0.00014	0.135±0.014	0.005±0	<0.007±0.00001 E	0.106±0.002	0.245±0.014
NC7-75	19-Nov-04	0.00682±0.00011	0.12±0.02	0.00432±0.00008	<0.007±0.00002 E	0.0984±0.0011	0.22±0.02
NC7-75	20-May-05	0.00683±0.00011	<0.11	0.0036±0.000076	<0.000079	0.081±0.0012	0.085±0.0012
NC7-75	11-Oct-05	0.00657±0.000056	0.11±0.0047	0.0036±0.000033	<0.00025	0.085±0.00032	0.2±0.0047
NC7-75	25-May-06	0.00693±0.000035	0.1±0.0065	0.0036±0.000027	<0.007±0.000013	0.08±0.00044	0.19±0.0065
NC7-75	1-Dec-06	0.00704±0.000055	0.12±0.003	0.004±0.000043	<0.000067	0.089±0.00064	0.21±0.0031
NC7-76	25-Oct-03	0.00714±0.000033	2.301±0.104	0.08369±0.00087	<0.007±0.00035	1.8235±0.0169	4.20819±0.10537
NC7-76	11-May-04	0.00715±0.000033	2.113±0.106	0.08766±0.0004	<0.0008±0	1.90756±0.000011	4.10859±0.10565
NC7-76	25-Aug-05	0.007±0.000043	1.8±0.074	0.073±0.00059	<0.00031	1.6±0.0084	3.5±0.075
NC7-76	18-May-06	0.00712±0.000017	2.1±0.028	0.084±0.00021	<0.00035	1.8±0.0015	4.1±0.028
W-865-01	17-May-05	0.00719±0.000051	0.43±0.0063	0.019±0.00015	<0.000077	0.4±0.0017	0.85±0.0066
W-865-01	24-Aug-05	0.00719±0.000058	0.43±0.012	0.018±0.0002	<0.00014	0.38±0.0031	0.83±0.012
W-865-03	20-May-05	0.00723±0.000042	1.2±0.026	0.026±0.0002	<0.00011	0.57±0.0026	1.8±0.027

Table A-3. Ground/surface water mass spectrometric analyses for uranium isotopes (pCi/L) and U235/U238 atom ratio collected from the Pit 7 Complex between July 1, 2003 and December 31, 2006.

Location	Sample Date	Uranium 235/238 (atom ratio)	Uranium 234 by mass measurement (pCi/L)	Uranium 235 by mass measurement (pCi/L)	Uranium 236 by mass measurement (pCi/L)	Uranium 238 by mass measurement (pCi/L)	Total Uranium by mass measurement (pCi/L)
W-865-03	24-Aug-05	0.00715±0.000064	1.2±0.023	0.026±0.00041	<0.00011	0.57±0.0072	1.8±0.024
W-865-07	13-May-05	0.00737±0.00004	1.8±0.036	0.043±0.0006	<0.00017	0.9±0.012	2.8±0.038
W-865-07	18-Aug-05	0.00723±0.000088	1.5±0.047	0.034±0.00055	<0.00014	0.73±0.0077	2.2±0.048
W-865-1804	18-Dec-03	0.00728±0.000085	0.858±0.036	0.0188±0.00022	<0.00044±0	0.40124±0.000028	1.27813±0.03555
W-865-1804	4-Mar-04	0.00731±0.000068	1.031±0.04	0.02356±0.0004	<0.00022±0	0.50138±0.006	1.55611±0.04
W-865-1804	9-Jun-04	0.00724±0.000064	1.107±0.053	0.026±0	<0.007E	0.552±0.005	1.685±0.053
W-PIT7-02	24-Nov-03	0.00724±0.000069	0.215±0.02	0.00496±0.00007	<0.007±0.00031	0.10641±0.00114	0.32637±0.02003
W-PIT7-02	10-May-04	0.00694±0.00016	<0.172±0	0.00394±0.000092	<0.00064±0	0.08844±0.000054	0.09238±0.00011
W-PIT7-02	7-Jun-05	0.00721±0.000051	0.27±0.0058	0.0077±0.00007	<0.007±0.0000047	0.17±0.00097	0.44±0.0059
W-PIT7-02	24-May-06	0.00726±0.000043	1.1±0.014	0.04±0.00026	<0.00017	0.87±0.0018	2±0.014
W-PIT7-03	25-Nov-03	0.00698±0.000036	15.622±0.91	0.54805±0.00409	<0.007±0.01404	12.2014±0.0658	28.37145±0.91238
W-PIT7-03	10-May-04	0.00698±0.000062	13.978±0.4	0.54371±0.007	<0.00277±0	12.11809±0.1	26.63936±0.4
W-PIT7-03	24-May-06	0.00712±0.000036	14±1.1	0.54±0.0046	<0.0023	12±0.082	26±1.1
W-PIT7-10	4-Dec-03	0.0072±0.00007	1.313±0.044	0.04656±0.00045	<0.00022±0	1.0057±0.000024	2.36488±0.04371
W-PIT7-11	27-Oct-05	0.00709±0.000037	4±0.039	0.11±0.00066	<0.00048	2.5±0.0065	6.6±0.04
W-PIT7-12	17-Dec-03	0.00728±0.000043	1.714±0.087	0.04125±0.00024	<0.00052±0	0.8806±0.000014	2.63582±0.0872
W-PIT7-12	1-Nov-04	0.00732±0.000047	1.73±0.06	0.0455±0.0006	<0.00019	0.967±0.011	2.74±0.06
W-PIT7-12	20-May-05	0.00723±0.00011	1.6±0.05	0.043±0.00095	<0.00018	0.93±0.015	2.6±0.052
W-PIT7-12	23-Aug-05	0.00721±0.000048	1.5±0.027	0.04±0.00033	<0.00017	0.87±0.0042	2.5±0.028
W-PIT7-12	30-Nov-05	0.00727±0.000024	1.5±0.026	0.039±0.00021	<0.00016	0.84±0.0035	2.4±0.026
W-PIT7-12	16-Feb-06	0.00727±0.000023	1.6±0.014	0.04±0.00017	<0.00017	0.86±0.0024	2.5±0.014
W-PIT7-12	24-May-06	0.00728±0.000042	1.6±0.028	0.042±0.00031	<0.00017	0.9±0.0041	2.6±0.029
W-PIT7-12	20-Sep-06	0.0072±0.00047	<5.2	0.044±0.0029	<0.0083	0.95±0.012	0.99±0.012
W-PIT7-12	14-Nov-06	0.00722±0.000042	1.6±0.041	0.041±0.0003	<0.00017	0.89±0.0038	2.5±0.041
W-PIT7-13	3-Dec-03	0.0073±0.00008	6.303±0.477	0.15042±0.00184	<0.007±0.00738	3.2047±0.0175	9.65812±0.47732
W-PIT7-13	2-Nov-04	0.0072±0.00012	4.928±0.398	0.143±0.003	<0.0007	3.098±0.047	8.169±0.4
W-PIT7-13	23-May-05	0.00727±0.00009	4.9±0.067	0.14±0.0023	<0.00059	3.1±0.03	8.1±0.074
W-PIT7-13	23-Aug-05	0.00724±0.00006	4.6±0.099	0.13±0.0018	<0.00055	2.9±0.03	7.6±0.1
W-PIT7-13	27-Oct-05	0.00718±0.000082	4.3±0.095	0.13±0.0019	<0.00053	2.7±0.028	7.2±0.099
W-PIT7-13	21-Feb-06	0.00724±0.000021	4.5±0.043	0.13±0.00051	<0.00053	2.7±0.0074	7.4±0.044

Table A-3. Ground/surface water mass spectrometric analyses for uranium isotopes (pCi/L) and U235/U238 atom ratio collected from the Pit 7 Complex between July 1, 2003 and December 31, 2006.

Location	Sample Date	Uranium 235/238 (atom ratio)	Uranium 234 by mass measurement (pCi/L)	Uranium 235 by mass measurement (pCi/L)	Uranium 236 by mass measurement (pCi/L)	Uranium 238 by mass measurement (pCi/L)	Total Uranium by mass measurement (pCi/L)
W-PIT7-13	30-May-06	0.0072±0.00002	4.6±0.052	0.13±0.00088	<0.00056	2.9±0.017	7.6±0.055
W-PIT7-13	6-Sep-06	0.00727±0.000052	4.6±0.13	0.13±0.00099	<0.00054	2.8±0.0062	7.5±0.13
W-PIT7-13	6-Dec-06	0.00723±0.000027	4.8±0.092	0.14±0.00069	<0.00057	3±0.01	7.9±0.092
W-PIT7-14	18-Dec-03	<0.00711±0	<0.019±0	<0.000049±0	<0.0002±0	0.00106±0.00239	<0.06273±0.00239
W-PIT7-14	9-Mar-04	0.00381±0.000084	<0.007±0	0.00017±0.000011	<0.00003±0	0.00707±0.0004	<0.06273±0.0004
W-PIT7-14	14-Jun-04	<0.00725	<0.003	<0.000022	<0.007E	0.002±0	<0.06273E
W-PIT7-14	13-Sep-04	<0.0082	<0.003	<0.00001	<0.00001	0.001±0.0001	<0.06273±0.00008 E
W-PIT7-14	2-Nov-04	0.00754±0.00032	<0.009	0.0001±0.0000049	<0.00002	0.002±0.00003	<0.06273±0.00004 E
W-PIT7-14	7-Mar-05	0.0059±0.00018	<0.062±0.00049	0.00005±0.0000016	<0.000011	0.0013±0.0000053	<0.063±0.00049
W-PIT7-14	20-May-05	<0.00696	<0.0041	<0.000056	<0.00003	0.0013±0.000034	<0.06273±0.000034
W-PIT7-14	23-Aug-05	<0.00593	<0.0084	<0.000059	<0.000069	0.0015±0.000059	<0.06273±0.000059
W-PIT7-14	24-Oct-05	<0.00727	<0.18	<0.00042	<0.0016	0.0089±0.000043	<0.06273±0.000043
W-PIT7-14	16-Feb-06	<0.01075	<0.32	<0.000051	<0.0025	0.00074±0.0000092	<0.06273±0.0000092
W-PIT7-14	24-May-06	<0.00763	<0.068	<0.000075	<0.00048	0.0015±0.000017	<0.06273±0.000017
W-PIT7-14	20-Sep-06	0.00654±0.00017	<0.021	0.00023±0.0000066	<0.00017	0.0056±0.000059	<0.06273±0.00006
W-PIT7-14	14-Nov-06	0.00725±0.00022	<0.062±0.0021	0.000073±0.0000023	<0.007±0.0000035	0.0016±0.0000096	<0.06273±0.0021
W-PIT7-15	4-Dec-03	0.00709±0.00013	<0.065±0	0.00116±0.000021	<0.00019±0	0.02544±0.000042	<0.06273±0.000047
W-PIT7-15	2-Nov-04	0.00738±0.00013	<0.062±0.006 E	0.00115±0.00002	<0.00002	0.024±0.0001	0.066±0.006
W-PIT7-15	3-Nov-05	0.00733±0.00011	<0.12	0.0024±0.000042	<0.0002	0.052±0.00043	<0.06273±0.00043
W-PIT7-15	7-Dec-06	0.00725±0.000092	<0.062±0.004	0.0013±0.00002	<0.000068	0.028±0.00024	0.077±0.004
W-PIT7-16	28-Dec-04	0.00705±0.000051	0.2±0.008	0.004±0.00003	<0.00002	0.093±0.0003	0.298±0.008
W-PIT7-16	26-Apr-05	0.0069±0.0001	0.21±0.0035	0.0044±0.00005	<0.000058	0.1±0.00078	0.31±0.0035
W-PIT7-16	18-May-06	0.007±0.000006	0.19±0.003	0.004±0.000016	<0.007±0.000007	0.089±0.00035	0.29±0.003
W-PIT7-1860	7-Mar-05	0.00726±0.000044	0.11±0.0022	0.0033±0.000026	<0.000013	0.07±0.00036	0.18±0.0022
W-PIT7-1860	15-Jun-05	0.00722±0.000087	0.18±0.0059	0.0048±0.000074	<0.007±0.0000088	0.1±0.00099	0.29±0.006
W-PIT7-1860	17-Aug-05	0.00726±0.000079	0.23±0.0046	0.0063±0.000088	<0.000041	0.14±0.0012	0.37±0.0047
W-PIT7-1860	31-Oct-05	0.00727±0.000042	0.25±0.0087	0.0063±0.000063	<0.00005	0.13±0.0011	0.39±0.0088
W-PIT7-1861	7-Mar-05	0.00722±0.000046	0.29±0.0075	0.0073±0.000074	<0.00003	0.16±0.0013	0.45±0.0076
W-PIT7-1861	15-Jun-05	0.00724±0.000056	0.29±0.0058	0.0074±0.000078	<0.007±0.0000062	0.16±0.0011	0.46±0.0059
W-PIT7-1861	17-Aug-05	0.00722±0.000052	0.28±0.0057	0.0071±0.000077	<0.00012	0.15±0.0012	0.44±0.0058

Table A-3. Ground/surface water mass spectrometric analyses for uranium isotopes (pCi/L) and U235/U238 atom ratio collected from the Pit 7 Complex between July 1, 2003 and December 31, 2006.

Location	Sample Date	Uranium 235/238 (atom ratio)	Uranium 234 by mass measurement (pCi/L)	Uranium 235 by mass measurement (pCi/L)	Uranium 236 by mass measurement (pCi/L)	Uranium 238 by mass measurement (pCi/L)	Total Uranium by mass measurement (pCi/L)
W-PIT7-1861	31-Oct-05	0.00727±0.00002	0.26±0.0075	0.0071±0.000066	<0.000074	0.15±0.0013	0.42±0.0076
W-PIT7-1903	11-Jul-03	0.00313±0.00005	26.183±4.689	1.01463±0.02111	0.24164±0.0388	50.394±0.672	77.83327±4.73711
W-PIT7-1903	8-Aug-03	0.00302±0.000041	27.724±2.323	1.20817±0.01945	0.28657±0.01219	62.253±0.538	91.47174±2.3846
W-PIT7-1903	5-Sep-03	0.00298±0.000035	29.179±2.545	1.30925±0.01783	0.28849±0.0263	68.368±0.47	99.14474±2.58823
W-PIT7-1903	10-Oct-03	0.00294±0.000024	27.813±1.331	1.35029±0.01267	0.34224±0.02743	71.374±0.331	100.87953±1.37187
W-PIT7-1903	7-Nov-03	0.00294±0.000008	30.199±1.376	1.39947±0.00593	0.35471±0.01424	73.973±0.241	105.92618±1.39703
W-PIT7-1903	12-Dec-03	0.00293±0.00002	23.77±1.294	1.35159±0.00911	0.34362±0.00133	71.853±0.000007	97.31825±1.29362
W-PIT7-1903	9-Jan-04	0.0029±0.000017	23.396±1.896	1.42007±0.00818	0.38186±0.00047	76.05146±0.000006	101.24903±1.89619
W-PIT7-1903	6-Feb-04	0.00299±0.000027	24.822±2.114	1.35919±0.0121	0.35617±0.00169	70.64614±0.000009	97.18304±2.11385
W-PIT7-1903	4-Mar-04	0.00288±0.000012	24.572±1.146	1.42353±0.00611	0.35893±0.00039	76.97767±0.000004	103.33192±1.14603
W-PIT7-1903	30-Oct-04	0.00293±0.000044	23.817±2.456	1.47±0.03	0.3834±0.0008	78.075±1.106	103.745±2.694
W-PIT7-1903	9-Mar-05	0.0028±0.000013	20±0.79	1.1±0.0082	0.33±0.00021	63±0.34	84±0.86
W-PIT7-1903	11-May-05	0.00277±0.000028	24±1.3	1.5±0.017	0.43±0.00041	83.83±0.4	110±1.3
W-PIT7-1903	9-Aug-05	0.0027±0.000012	24±0.074	1.5±0.0073	0.43±0.0017	87±0.15	<0.06273±0.16
W-PIT7-1903	7-Nov-05	0.0028±0.000024	25±0.64	1.4±0.014	0.41±0.00027	81±0.35	110±0.73
W-PIT7-1903	13-Feb-06	0.00281±0.000008	24±1.2	1.4±0.0056	0.4±0.00039	79±0.21	100±1.2
W-PIT7-1903	9-May-06	0.00283±0.000027	26±1.3	1.5±0.017	0.44±0.00039	82±0.47	110±1.3
W-PIT7-1903	9-Aug-06	0.0028±0.000014	26±1.3	1.5±0.0089	0.44±0.00039	83±0.27	110±1.3
W-PIT7-1904	11-Jul-03	0.00394±0.000047	31.544±4.984	1.13227±0.01523	0.16303±0.06865	44.735±0.277	77.5743±4.99219
W-PIT7-1904	8-Aug-03	0.00386±0.000044	31.67±3.625	1.20976±0.01595	0.1777±0.01874	48.763±0.323	81.82046±3.63944
W-PIT7-1904	5-Sep-03	0.00379±0.000035	32.091±1.911	1.23998±0.0162	0.18536±0.02932	50.864±0.47	84.38034±1.96823
W-PIT7-1904	10-Oct-03	0.00375±0.000033	30.777±0.976	1.21198±0.01557	0.18316±0.00979	50.26±0.47	82.43214±1.08343
W-PIT7-1904	7-Nov-03	0.00386±0.000013	30.131±1.776	1.18544±0.0059	0.1832±0.01833	47.758±0.175	79.25764±1.7847
W-PIT7-1904	12-Dec-03	0.00393±0.000032	23.799±1.517	1.14389±0.00926	0.16067±0.00066	45.26723±0.000011	70.3704±1.51713
W-PIT7-1904	9-Jan-04	0.00381±0.000021	24.976±2.686	1.18199±0.0066	0.19031±0.00403	48.24161±0.000007	74.59017±2.68621
W-PIT7-1904	6-Feb-04	0.00372±0.000016	23.158±2.221	1.20472±0.00523	0.17909±0.0039	50.40404±0.000005	74.94564±2.22118
W-PIT7-1904	4-Mar-04	0.00374±0.000045	24.397±5.157	1.17947±0.01414	0.20676±0.01796	49.10249±0.000015	74.886±5.15715
W-PIT7-1904	30-Oct-04	0.00375±0.000058	24.454±2.13	1.239±0.026	0.2207±0.0013	51.411±0.738	77.324±2.255
W-PIT7-1904	9-Mar-05	0.0032±0.000009	22±0.71	1.2±0.0072	0.26±0.00081	57±0.31	80±0.78
W-PIT7-1904	11-May-05	0.00309±0.000018	24±1.1	1.4±0.016	0.34±0.00039	70.4±0.69	96±1.3

Table A-3. Ground/surface water mass spectrometric analyses for uranium isotopes (pCi/L) and U235/U238 atom ratio collected from the Pit 7 Complex between July 1, 2003 and December 31, 2006.

Location	Sample Date	Uranium 235/238 (atom ratio)	Uranium 234 by mass measurement (pCi/L)	Uranium 235 by mass measurement (pCi/L)	Uranium 236 by mass measurement (pCi/L)	Uranium 238 by mass measurement (pCi/L)	Total Uranium by mass measurement (pCi/L)
W-PIT7-1904	9-Aug-05	0.00344±0.000013	22±0.81	1.2±0.0056	0.22±0.00031	53±0.15	76±0.82
W-PIT7-1904	7-Nov-05	0.00353±0.000017	21±0.49	1.1±0.0093	0.2±0.0002	47±0.34	70±0.6
W-PIT7-1904	13-Feb-06	0.00358±0.000009	19±0.66	0.98±0.0056	0.18±0.00025	43±0.22	63±0.69
W-PIT7-1904	9-May-06	0.0035±0.000015	21±0.75	1.1±0.01	0.2±0.00029	48±0.4	70±0.85
W-PIT7-1904	9-Aug-06	0.00354±0.000018	22±0.75	1.1±0.0072	0.21±0.00028	48±0.2	72±0.77
W-PIT7-1905	11-Jul-03	0.00335±0.00003	6.873±0.529	0.30715±0.00286	0.06011±0.00547	14.245±0.0366	21.48526±0.5303
W-PIT7-1905	8-Aug-03	0.00337±0.000047	8.314±0.925	0.35982±0.00556	0.0732±0.00638	16.594±0.111	25.34102±0.93167
W-PIT7-1905	5-Sep-03	0.00331±0.000035	8.585±0.991	0.37922±0.00436	0.06826±0.00683	17.7948±0.081	26.82728±0.99434
W-PIT7-1905	10-Oct-03	0.00333±0.000023	8.348±0.644	0.37007±0.00347	0.06969±0.00335	17.303±0.11	26.09076±0.65334
W-PIT7-1905	7-Nov-03	0.00333±0.000016	7.268±0.539	0.311±0.00192	0.06121±0.00557	14.5061±0.0561	22.14631±0.54194
W-PIT7-1905	12-Dec-03	0.00331±0.000026	6.69±0.395	0.34747±0.00277	0.07054±0.00027	16.34962±0.000009	23.45756±0.39528
W-PIT7-1905	9-Jan-04	0.00326±0.000016	5.827±0.534	0.32803±0.00161	0.06988±0.00037	15.64092±0.000005	21.86554±0.53376
W-PIT7-1905	6-Feb-04	0.00323±0.000027	6.164±0.75	0.33711±0.00279	0.07418±0.00095	16.22985±0.000009	22.80564±0.75002
W-PIT7-1905	4-Mar-04	0.00354±0.000025	4.155±0.344	0.21914±0.00154	0.03995±0.00007	9.62505±0.000008	14.03949±0.34357
W-PIT7-1905	30-Oct-04	0.00302±0.000024	7.273±0.911	0.423±0.005	0.1055±0.0008	21.785±0.157	29.587±0.924
W-PIT7-1905	9-Mar-05	0.0034±0.0001	<8.4	0.34±0.025	<0.12	16±1.1	16±1.1
W-PIT7-1905	11-May-05	0.00307±0.000021	11±0.52	0.66±0.007	0.16±0.00001	33.71±0.27	46±0.58
W-PIT7-1905	9-Aug-05	0.003±0.000016	9.8±0.43	0.55±0.0034	0.14±0.00015	29±0.084	39±0.44
W-PIT7-1905	7-Nov-05	0.00308±0.000035	7.2±0.29	0.39±0.0063	0.096±0.00016	20±0.22	28±0.36
W-PIT7-1905	13-Feb-06	0.00312±0.000015	7.4±0.3	0.39±0.0023	0.093±0.0001	20±0.064	27±0.3
W-PIT7-1905	9-May-06	0.00304±0.000017	14±0.63	0.79±0.0069	0.21±0.0008	41±0.27	55±0.68
W-PIT7-1905	9-Aug-06	0.00299±0.000017	13±0.59	0.74±0.0066	0.2±0.0002	38±0.26	52±0.65
W-PIT7-1907	11-Jul-03	0.00421±0.000061	<0.062±0.386	0.00829±0.0002	<0.007±0.00164	0.30606±0.00608	0.31435±0.00608
W-PIT7-1907	8-Aug-03	0.00418±0.00004	0.298±0.009	0.01234±0.00014	<0.007±0.00009	0.45952±0.00285	0.77153±0.00944
W-PIT7-1907	5-Sep-03	0.00418±0.00004	0.178±0.054	0.00715±0.00013	<0.007±0.00133	0.26615±0.0043	0.4513±0.05417
W-PIT7-1907	10-Oct-03	0.00416±0.000024	0.416±0.027	0.01817±0.00041	<0.007±0.00027	0.6788±0.015	1.11531±0.03089
W-PIT7-1907	7-Nov-03	0.00441±0.000035	0.082±0.009	0.00272±0.00003	<0.007±0.00007	0.09589±0.00077	0.1809±0.00903
W-PIT7-1907	12-Dec-03	0.00439±0.000032	<0.062±0.014	0.00253±0.000019	0.00032±0.00004	0.08943±0.000011	0.15342±0.01372
W-PIT7-1907	9-Jan-04	0.00419±0.000029	0.134±0.019	0.00608±0.000042	0.00073±0.00006	0.2255±0.00001	0.36658±0.01896
W-PIT7-1907	6-Feb-04	0.00424±0.00003	0.105±0.016	0.00531±0.000037	<0.007±0.00003	0.19484±0.00001	0.30539±0.01592

Table A-3. Ground/surface water mass spectrometric analyses for uranium isotopes (pCi/L) and U235/U238 atom ratio collected from the Pit 7 Complex between July 1, 2003 and December 31, 2006.

Location	Sample Date	Uranium 235/238 (atom ratio)	Uranium 234 by mass measurement (pCi/L)	Uranium 235 by mass measurement (pCi/L)	Uranium 236 by mass measurement (pCi/L)	Uranium 238 by mass measurement (pCi/L)	Total Uranium by mass measurement (pCi/L)
W-PIT7-1907	4-Mar-04	0.00541±0.000061	<0.027±0	0.00092±0.000013	<0.00006±0	0.02633±0.0002	0.02724±0.0002
W-PIT7-1907	30-Oct-04	0.00438±0.000057	0.107±0.017	0.006±0	<0.007±0.00001 E	0.195±0.003	0.309±0.017
W-PIT7-1907	9-Mar-05	0.0071±0.000027	0.14±0.0017	0.0051±0.000039	<0.000021	0.11±0.00074	0.25±0.0018
W-PIT7-1907	11-May-05	0.0061±0.000047	0.098±0.0045	0.0037±0.000037	<0.007±0.0000071	0.094±0.0006	0.2±0.0046
W-PIT7-1907	9-Aug-05	0.00588±0.000033	0.071±0.0033	0.0025±0.000016	<0.00023	0.065±0.0002	0.14±0.0033
W-PIT7-1907	7-Nov-05	0.00659±0.000034	0.07±0.005	0.0021±0.000014	<0.00013	0.05±0.00022	0.12±0.005
W-PIT7-1907	14-Feb-06	0.00508±0.000045	<0.1	0.002±0.000022	<0.0009	0.062±0.00041	0.064±0.00042
W-PIT7-1907	9-May-06	0.00652±0.000029	<0.062±0.0034	0.0014±0.0000089	<0.007±0.000021	0.034±0.00015	0.079±0.0034
W-PIT7-1907	15-Aug-06	<0.00681	<0.049	<0.0012	<0.00033	0.027±0.00084	<0.06273±0.00084
W-PIT7-1915	11-Jul-03	0.00486±0.000082	<0.062±0.079	0.00201±0.00004	<0.007±0.00084	0.06427±0.00083	0.06628±0.00083
W-PIT7-1915	8-Aug-03	0.00421±0.000062	0.074±0.006	0.00234±0.00004	<0.007±0.00007	0.08656±0.00073	0.16323±0.00604
W-PIT7-1915	5-Sep-03	0.00389±0.000073	0.064±0.016	0.00211±0.00005	<0.007±0.00052	0.08442±0.00107	0.15053±0.01604
W-PIT7-1915	10-Oct-03	0.00502±0.000054	0.08±0.012	0.00285±0.00006	<0.007±0.00007	0.08841±0.00149	0.17155±0.01209
W-PIT7-1915	7-Nov-03	0.00487±0.000027	0.083±0.007	0.00275±0.00002	<0.007±0.00005	0.08765±0.00057	0.17367±0.00702
W-PIT7-1915	12-Dec-03	0.00483±0.000041	0.064±0.014	0.00277±0.000023	<0.00032±0	0.08919±0.000014	0.15616±0.01384
W-PIT7-1915	9-Jan-04	0.00515±0.000047	<0.098±0	0.00284±0.000026	<0.00025±0	0.08582±0.000016	0.08866±0.00003
W-PIT7-1915	6-Feb-04	0.00544±0.000052	<0.1±0	0.0027±0.000026	<0.00042±0	0.07721±0.000017	0.07991±0.000031
W-PIT7-1915	4-Mar-04	0.00576±0.00005	0.064±0.005	0.0029±0.00004	0.00014±0.00001	0.07826±0.0009	0.14562±0.005
W-PIT7-1915	30-Oct-04	0.00576±0.00013	<0.109	0.003±0	<0.0002	0.087±0.002	0.09±0.002
W-PIT7-1915	9-Mar-05	0.0065±0.000053	0.15±0.0036	0.0059±0.000057	<0.007±0.0000024	0.14±0.00074	0.3±0.0037
W-PIT7-1915	11-May-05	0.0068±0.00003	0.1±0.0051	0.0036±0.000023	<0.00024	0.082±0.00037	0.19±0.0051
W-PIT7-1915	9-Aug-05	0.00636±0.000027	<0.19	0.0031±0.000017	<0.00093	0.075±0.00027	0.078±0.00027
W-PIT7-1915	7-Nov-05	0.00679±0.00002	0.075±0.0044	0.0024±0.000017	<0.00013	0.055±0.00036	0.13±0.0044
W-PIT7-1915	14-Feb-06	0.00663±0.000072	0.1±0.012	0.0025±0.000028	<0.00083	0.058±0.00021	0.16±0.012
W-PIT7-1915	9-May-06	0.00529±0.00002	<0.062±0.0046	0.001±0.0000051	<0.007±0.000021	0.03±0.000096	0.071±0.0046
W-PIT7-1915	9-Aug-06	0.00453±0.000086	<0.048	0.0013±0.000026	<0.007±0.0000043	0.046±0.00023	<0.06273±0.00023
W-PIT7-1916	11-Jul-03	0.00332±0.000058	34.719±8.182	1.17521±0.02589	<0.007±0.36942	55.03±0.739	90.92421±8.21535
W-PIT7-1916	8-Aug-03	0.00328±0.000033	31.577±2.264	1.28266±0.01507	0.25645±0.02337	60.775±0.37	93.89111±2.2942
W-PIT7-1916	5-Sep-03	0.00331±0.000037	26.333±3.297	1.26046±0.01649	0.26085±0.02275	59.129±0.403	86.98331±3.32166
W-PIT7-1916	10-Oct-03	0.00336±0.000027	26.305±1.895	1.09295±0.01343	0.21364±0.00991	50.629±0.47	78.24059±1.95249

Table A-3. Ground/surface water mass spectrometric analyses for uranium isotopes (pCi/L) and U235/U238 atom ratio collected from the Pit 7 Complex between July 1, 2003 and December 31, 2006.

Location	Sample Date	Uranium 235/238 (atom ratio)	Uranium 234 by mass measurement (pCi/L)	Uranium 235 by mass measurement (pCi/L)	Uranium 236 by mass measurement (pCi/L)	Uranium 238 by mass measurement (pCi/L)	Total Uranium by mass measurement (pCi/L)
W-PIT7-1916	7-Nov-03	0.00339±0.000018	27.239±0.981	1.14286±0.00811	0.25139±0.01012	52.426±0.247	81.05925±1.0117
W-PIT7-1916	12-Dec-03	0.00338±0.000019	22.529±0.961	1.16184±0.00649	0.23296±0.0015	53.42305±0.000006	77.34655±0.96098
W-PIT7-1916	9-Jan-04	0.00335±0.000021	22.552±1.568	1.16455±0.0074	0.23847±0.00096	54.07701±0.000007	78.03198±1.56817
W-PIT7-1916	6-Feb-04	0.00333±0.000018	23.07±2.497	1.18073±0.00634	0.22297±0.0016	55.09309±0.000006	79.56687±2.49672
W-PIT7-1916	4-Mar-04	0.0033±0.000026	18.401±3.78	1.15864±0.00901	0.23562±0.0074	54.55776±0.000009	74.35252±3.7801
W-PIT7-1916	30-Oct-04	0.00338±0.000056	26.492±1.89	1.369±0.027	0.2886±0.0008	62.984±0.646	91.133±1.997
W-PIT7-1916	9-Mar-05	0.0033±0.000015	18±0.61	1±0.0097	0.22±0.00018	48±0.4	67±0.73
W-PIT7-1916	11-May-05	0.0034±0.000033	21±0.87	1.2±0.02	0.24±0.00034	53.62±0.76	77±1.2
W-PIT7-1916	9-Aug-05	0.00349±0.000051	23±0.84	1.2±0.023	0.23±0.00032	51±0.69	76±1.1
W-PIT7-1916	7-Nov-05	0.00346±0.000029	22±0.78	1.1±0.01	0.22±0.00024	50±0.15	74±0.79
W-PIT7-1916	14-Feb-06	0.00345±0.000024	23±0.78	1.1±0.0084	0.23±0.00029	51±0.14	75±0.79
W-PIT7-1916	11-May-06	0.00361±0.000024	22±1.5	1.1±0.0093	0.23±0.001	48±0.25	71±1.5
W-PIT7-1916	9-Aug-06	0.00351±0.000014	23±0.78	1.1±0.0079	0.22±0.0002	50±0.29	75±0.83
W-PIT7-1917	11-Jul-03	0.00402±0.00002	14.397±0.709	0.69012±0.00347	0.10305±0.00045	26.69769±0.000007	41.8878±0.70921
W-PIT7-1917	8-Aug-03	0.00413±0.00005	21.685±1.182	0.83799±0.01174	0.12116±0.01215	31.584±0.222	54.22815±1.20279
W-PIT7-1917	5-Sep-03	0.00426±0.000036	24.42±1.748	0.85816±0.00821	0.11419±0.01804	31.334±0.14	56.72635±1.75371
W-PIT7-1917	10-Oct-03	0.00424±0.000023	19.492±1.587	0.77317±0.00712	0.09802±0.00549	28.391±0.211	48.75419±1.60099
W-PIT7-1917	7-Nov-03	0.00428±0.000019	19.329±1.02	0.75408±0.00438	0.09989±0.01052	27.411±0.102	47.59397±1.02515
W-PIT7-1917	12-Dec-03	0.00428±0.000032	16.357±0.82	0.78259±0.00578	0.10564±0.00062	28.4531±0.000011	45.69839±0.82046
W-PIT7-1917	9-Jan-04	0.00427±0.000023	16.467±1.24	0.80105±0.00429	0.092±0.00102	29.19006±0.000008	46.54983±1.24049
W-PIT7-1917	6-Feb-04	0.00431±0.000029	17.024±1.552	0.79094±0.00534	0.0988±0.00137	28.56153±0.00001	46.47522±1.55241
W-PIT7-1917	4-Mar-04	0.00435±0.000054	15.637±2.762	0.78114±0.00972	<0.09795±0	27.93439±0.000018	44.35264±2.76244
W-PIT7-1917	30-Oct-04	0.00454±0.000035	16.921±1.709	0.779±0.008	0.0888±0.0008	26.66±0.163	44.449±1.717
W-PIT7-1917	9-Mar-05	0.004±0.000017	12±0.29	0.59±0.0032	0.094±0.000095	23±0.076	36±0.3
W-PIT7-1917	11-May-05	0.00331±0.000037	9.5±0.38	0.51±0.0079	0.11±0.00014	24.14±0.26	34±0.46
W-PIT7-1917	9-Aug-05	0.00331±0.000018	12±0.93	0.65±0.0038	0.13±0.00017	31±0.062	44±0.94
W-PIT7-1917	7-Nov-05	0.00308±0.000034	11±0.48	0.63±0.0091	0.16±0.00019	32±0.29	44±0.56
W-PIT7-1917	14-Feb-06	0.0029±0.000014	15±0.74	0.91±0.0049	0.24±0.00024	49±0.12	65±0.75
W-PIT7-1917	11-May-06	0.00289±0.00002	17±0.8	0.97±0.0092	0.26±0.00027	52±0.35	70±0.88
W-PIT7-1917	9-Aug-06	0.00293±0.000024	19±0.9	1.1±0.011	0.29±0.0003	59±0.31	79±0.95

Table A-3. Ground/surface water mass spectrometric analyses for uranium isotopes (pCi/L) and U235/U238 atom ratio collected from the Pit 7 Complex between July 1, 2003 and December 31, 2006.

Location	Sample Date	Uranium 235/238 (atom ratio)	Uranium 234 by mass measurement (pCi/L)	Uranium 235 by mass measurement (pCi/L)	Uranium 236 by mass measurement (pCi/L)	Uranium 238 by mass measurement (pCi/L)	Total Uranium by mass measurement (pCi/L)
W-PIT7-1918	11-Jul-03	0.00426±0.000033	17.729±0.998	0.72619±0.0087	0.09163±0.01022	26.54±0.243	45.08682±1.02725
W-PIT7-1918	8-Aug-03	0.00422±0.000036	21.366±1.09	0.78132±0.01035	0.09386±0.01108	28.785±0.292	51.02618±1.12854
W-PIT7-1918	5-Sep-03	0.00417±0.000041	20.927±2.208	0.79564±0.00975	0.11385±0.0171	29.678±0.217	51.51449±2.21872
W-PIT7-1918	10-Oct-03	0.00411±0.000032	18.824±0.58	0.788±0.00947	0.10301±0.0058	29.837±0.273	49.55201±0.64113
W-PIT7-1918	7-Nov-03	0.00418±0.00002	18.373±0.525	0.73999±0.00606	0.10023±0.00532	27.503±0.183	46.71622±0.55604
W-PIT7-1918	12-Dec-03	0.00419±0.000028	17.291±0.88	0.77346±0.00516	0.10265±0.00038	28.70537±0.000009	46.87253±0.88029
W-PIT7-1918	9-Jan-04	0.00414±0.000032	18.106±1.338	0.80956±0.00626	0.10884±0.00096	30.40159±0.000011	49.42589±1.33791
W-PIT7-1918	6-Feb-04	0.00421±0.00003	15.911±1.64	0.77828±0.00555	0.1015±0.00109	28.73606±0.00001	45.52651±1.6397
W-PIT7-1918	4-Mar-04	0.00421±0.00004	19.573±3.589	0.79386±0.00751	0.11144±0.00722	29.35867±0.000013	49.83746±3.58853
W-PIT7-1918	30-Oct-04	0.00415±0.000039	17.324±1.4	0.841±0.011	0.1132±0.0008	31.505±0.267	49.782±1.426
W-PIT7-1918	9-Mar-05	0.0035±0.000011	11±0.34	0.58±0.0055	0.12±0.0001	26±0.23	38±0.41
W-PIT7-1918	11-May-05	0.00353±0.000024	16±0.6	0.86±0.011	0.17±0.00023	37.64±0.41	55±0.73
W-PIT7-1918	9-Aug-05	0.00347±0.000016	17±0.62	0.88±0.0079	<0.0076	40±0.31	58±0.69
W-PIT7-1918	7-Nov-05	0.00338±0.000038	15±0.41	0.78±0.011	0.16±0.00021	36±0.32	52±0.52
W-PIT7-1918	16-Feb-06	0.00348±0.000004	11±0.39	0.58±0.0016	0.12±0.00014	26±0.063	38±0.4
W-PIT7-1918	11-May-06	0.0034±0.000033	14±1.6	0.76±0.0082	0.15±0.0018	35±0.16	50±1.6
W-PIT7-1918	15-Aug-06	0.00336±0.000032	18±0.65	0.93±0.009	0.2±0.00023	43±0.093	62±0.66
W-PIT7-1919	11-Jul-03	0.0035±0.000032	26.751±2.31	0.92782±0.01299	0.1817±0.01592	41.189±0.437	69.04952±2.35106
W-PIT7-1919	8-Aug-03	0.00356±0.000037	28.987±3.142	0.96597±0.01263	0.18625±0.03242	42.219±0.335	72.35822±3.16
W-PIT7-1919	5-Sep-03	0.00354±0.000046	24.737±3.199	0.9803±0.01526	0.18146±0.02479	43.003±0.37	68.90176±3.22046
W-PIT7-1919	10-Oct-03	0.00353±0.000028	24.956±1.575	0.95404±0.0113	0.18541±0.02424	42.029±0.37	68.12445±1.6181
W-PIT7-1919	7-Nov-03	0.00356±0.000018	29.035±1.617	0.99389±0.00625	0.1834±0.01669	43.464±0.162	73.67629±1.62519
W-PIT7-1919	12-Dec-03	0.00355±0.000032	19.745±1.967	0.99379±0.00894	0.18816±0.00181	43.52132±0.000011	64.44849±1.96739
W-PIT7-1919	9-Jan-04	0.00356±0.000032	19.95±1.384	1.04887±0.00932	0.18736±0.0035	45.84357±0.000011	67.03009±1.38427
W-PIT7-1919	6-Feb-04	0.00354±0.000023	21.1±3.561	1.0265±0.00677	0.18609±0.00729	45.04885±0.000008	67.36181±3.56106
W-PIT7-1919	4-Mar-04	0.00345±0.000021	21.081±0.943	1.09044±0.00678	0.20541±0.00031	49.11859±0.000007	71.49534±0.943
W-PIT7-1919	30-Oct-04	0.00366±0.000029	21.902±1.424	1.14±0.014	0.1993±0.0018	48.372±0.46	71.612±1.497
W-PIT7-1919	9-Mar-05	0.00321±0.000012	21±0.84	1.1±0.0076	0.27±0.00029	55±0.3	78±0.9
W-PIT7-1919	11-May-05	0.00312±0.000036	<6.1	0.33±0.0044	0.078±0.000088	16±0.11	17±0.11
W-PIT7-1919	9-Aug-05	0.0033±0.00003	24±0.9	1.2±0.014	0.28±0.00032	59±0.4	84±0.99

Table A-3. Ground/surface water mass spectrometric analyses for uranium isotopes (pCi/L) and U235/U238 atom ratio collected from the Pit 7 Complex between July 1, 2003 and December 31, 2006.

Location	Sample Date	Uranium 235/238 (atom ratio)	Uranium 234 by mass measurement (pCi/L)	Uranium 235 by mass measurement (pCi/L)	Uranium 236 by mass measurement (pCi/L)	Uranium 238 by mass measurement (pCi/L)	Total Uranium by mass measurement (pCi/L)
W-PIT7-1919	7-Nov-05	0.00318±0.000031	23±0.75	1.2±0.013	0.29±0.00025	60±0.17	85±0.77
W-PIT7-1919	16-Feb-06	0.00323±0.000011	22±0.84	1.1±0.0067	0.27±0.00028	55±0.26	78±0.88
W-PIT7-1919	11-May-06	0.00329±0.000034	23±3.6	1.3±0.015	0.28±0.0012	59±0.31	83±3.6
W-PIT7-1919	15-Aug-06	0.00335±0.000012	24±0.86	1.2±0.0066	0.25±0.00031	56±0.23	81±0.89
W-PIT7-2141	16-Nov-05	0.0073±0.00006	2.8±0.05	0.077±0.00066	<0.00032	1.6±0.0038	4.5±0.051
SPRING13	20-Dec-04	0.00726±0.000043	0.466±0.016	0.01958±0.00017	<0.00008	0.42±0.003	0.905±0.016
SPRING13	7-Dec-05	0.00721±0.000046	0.45±0.042	0.019±0.00016	<0.00034	0.4±0.0024	0.87±0.042
SPRING24	8-Jun-05	0.00702±0.000054	0.73±0.013	0.017±0.00019	<0.007±0.000011	0.39±0.003	1.1±0.013
SPRING24	10-Apr-06	0.00689±0.000026	0.8±0.014	0.02±0.000087	<0.007±0.000026	0.44±0.001	1.3±0.014

Notes:

pCi/L = Picocuries per liter.

E = The analyte was detected below LLNL reporting limit, but above analytical laboratory minimum detection limit.

** Total Uranium calculated outside of database just for this data table.

Table A-4. Ground/surface water alpha spectrometric analyses for uranium isotopes (pCi/L) in samples collected from the Pit 7 Complex between July 1, 2003 and December 31, 2006.

Location	Sample Date	Uranium 233+234 (pCi/L)	Uranium 235+236 (pCi/L)	Uranium 238 (pCi/L)	Calculated Total Uranium** by alpha spec. (pCi/L)
K7-01	9-Sep-03	9.96±1.1	0.443±0.081	9.53±1	19.933±1.489
K7-01	2-Dec-03	10.5±1.1	0.556±0.079	10±1	21.056±1.489
K7-01	21-Jan-04	9.58±1	0.479±0.091	8.98±0.97	19.039±1.396
K7-01	21-Jan-04	9.66±1	0.518±0.096	9.07±0.98	19.248±1.403
K7-01	28-Apr-04	10.2±1.1	0.437±0.069	9.67±1	20.307±1.488
K7-01	4-Aug-04	10.4±1.1	0.539±0.1	9.38±1	20.319±1.490
K7-01	2-Nov-04	10.7±1.2	0.615±0.11	10.1±1.1	21.415±1.632
K7-01	24-Jan-05	10.3±1.1	0.552±0.1	9.68±1.1	20.532±1.559
K7-01	24-Jan-05	10.6±1.2	0.435±0.092	9.91±1.1	20.945±1.630
K7-01	5-Apr-05	10±1.1	0.445±0.084	9.42±1	19.865±1.489
K7-01	11-Jul-05	9.63±1.1	0.578±0.12	9.03±1	19.238±1.491
K7-01	24-Oct-05	9.51±1.1	0.503±0.13	8.62±1	18.633±1.492
K7-01	3-Jan-06	8.9±0.96	0.417±0.084	8.84±0.95	18.157±1.353
K7-01	3-Jan-06	9.11±1	0.39±0.09	8.66±0.96	18.16±1.389
K7-01	13-Apr-06	1.95±0.25	0.111±0.044	1.01±0.16	3.071±0.300
K7-01	5-Jul-06	8.55±0.92	0.356±0.073	7.92±0.85	16.826±1.255
K7-01	9-Oct-06	8.6±0.94	0.41±0.085	8.1±0.89	17.11±1.297
K7-03	17-Sep-03	3.62±0.41	0.15±0.043	3.61±0.41	7.38±0.581
K7-03	9-Dec-03	3.91±0.47	0.163±0.054	3.68±0.44	7.753±0.646
K7-03	21-Jan-04	3.66±0.42	0.152±0.044	3.42±0.4	7.232±0.582
K7-03	21-Apr-04	2.9±0.35	0.159±0.047	2.79±0.33	5.849±0.483
K7-03	10-Aug-04	3.38±0.4	0.141±0.045	3.38±0.4	6.901±0.567
K7-03	29-Oct-04	4.51±0.5	0.216±0.054	4.36±0.49	9.086±0.702
K7-03	25-Jan-05	3.14±0.37	0.129±0.042	2.84±0.34	6.109±0.504
K7-03	14-Apr-05	2.24±0.29	0.148±0.05	2±0.26	4.388±0.393
K7-03	14-Apr-05	3±0.38	0.177±0.059	2.66±0.35	5.837±0.520
K7-03	12-Jul-05	3.4±0.47	0.125±0.06	3.23±0.44	6.755±0.647
K7-03	27-Oct-05	3.27±0.38	0.129±0.047	3.1±0.37	6.499±0.532
K7-03	27-Oct-05	3.27±0.38	0.16±0.049	3.15±0.37	6.58±0.533
K7-03	5-Jan-06	3.03±0.37	0.133±0.051	3.25±0.39	6.413±0.540
K7-03	24-Apr-06	2.24±0.29	0.149±0.051	2.22±0.29	4.609±0.413
K7-03	24-Apr-06	2.26±0.28	0.131±0.044	2.16±0.27	4.551±0.391
K7-03	6-Jul-06	2.57±0.3	0.139±0.042	2.55±0.3	5.259±0.426
K7-03	4-Oct-06	3.13±0.38	0.148±0.048	2.82±0.35	6.098±0.519
K7-06	5-Aug-03	0.438±0.074	<0.1±0.019 E	0.395±0.069	<0.933±0.103
K7-06	4-Dec-03	0.514±0.091	<0.1±0.018 E	0.445±0.083	<1.059±0.124
K7-06	27-Jan-04	0.455±0.083	<0.1±0.018	0.363±0.069	<0.918±0.109
K7-06	2-Jun-04	0.357±0.076	<0.1±0.013	0.335±0.07	<0.792±0.104
K7-06	2-Jun-04	0.363±0.075	<0.1±0.02	0.347±0.069	<0.81±0.104
K7-06	18-Aug-04	0.428±0.08	<0.1±0.019 E	0.311±0.066	<0.839±0.105
K7-06	4-Nov-04	0.47±0.084	<0.1±0.024 E	0.357±0.07	<0.927±0.112
K7-06	4-Nov-04	0.475±0.086	<0.1±0.02	0.429±0.083	<1.004±0.121
K7-06	1-Feb-05	0.503±0.1	<0.1±0.017	0.456±0.092	<1.059±0.137
K7-06	5-Apr-05	0.506±0.097	<0.1±0.021	0.365±0.075	<0.971±0.124

Table A-4. Ground/surface water alpha spectrometric analyses for uranium isotopes (pCi/L) in samples collected from the Pit 7 Complex between July 1, 2003 and December 31, 2006.

Location	Sample Date	Uranium 233+234 (pCi/L)	Uranium 235+236 (pCi/L)	Uranium 238 (pCi/L)	Calculated Total Uranium** by alpha spec. (pCi/L)
K7-06	3-Aug-05	0.535±0.1	<0.1±0.009	0.336±0.08	<0.971±0.128
K7-06	31-Oct-05	0.456±0.096	<0.1±0.028	0.482±0.098	<1.038±0.140
K7-06	13-Jan-06	0.506±0.082	<0.1±0.019	0.45±0.075	<1.056±0.113
K7-06	25-Apr-06	0.473±0.098	<0.1±0.024	0.417±0.089	<0.99±0.135
K7-06	5-Jul-06	0.541±0.089	<0.1±0.016	0.413±0.074	<1.054±0.117
K7-06	3-Oct-06	0.428±0.08	<0.1±0.019	0.309±0.066	<0.837±0.105
K7-09	12-Sep-03	0.173±0.046	<0.1±0.016	<0.1±0.027 E	<0.373±0.056
K7-09	12-Sep-03	0.196±0.055	<0.1±0.014	<0.1±0.029 E	<0.396±0.064
K7-09	4-Dec-03	<0.1±0.033 E	<0.1±0.011	<0.1±0.033 E	<0.3±0.048
K7-09	26-Jan-04	<0.1±0.02	<0.1±0.012	<0.1±0.015	<0.3±0.028
K7-09	3-May-04	<0.1±0.017	<0.1±0.005	<0.1±0.013	<0.3±0.022
K7-09	17-Aug-04	<0.1±0.017	<0.1±0.007	<0.1±0.006	<0.3±0.019
K7-09	4-Nov-04	<0.1±0.016	<0.1±0.007	<0.1±0.016 E	<0.3±0.024
K7-09	24-Feb-05	<0.1±0.027	<0.1±0.008	<0.1±0.014	<0.3±0.031
K7-09	4-Apr-05	<0.1±0.022	<0.1±0.007	<0.1±0.005	<0.3±0.024
K7-09	2-Aug-05	<0.1±0.03	<0.1±0.009	<0.1±0.022	<0.3±0.038
K7-09	1-Nov-05	<0.1±0.028	<0.1±0.017	<0.1±0.014	<0.3±0.036
K7-09	4-Jan-06	<0.1±0.031	<0.1±0.014	<0.1±0.025	<0.3±0.042
K7-09	2-May-06	<0.1±0.023	<0.1±0.009	<0.1±0.008	<0.3±0.026
K7-09	17-Jul-06	<0.1±0.017	<0.1±0.007	<0.1±0.017	<0.3±0.025
K7-09	17-Jul-06	<0.1±0.025	<0.1±0.007	<0.1±0.018	<0.3±0.032
K7-09	4-Oct-06	<0.1±0.033	<0.1±0.008	<0.1±0.02	<0.3±0.039
K7-10	31-Jul-03	0.954±0.13	<0.1±0.024 E	0.688±0.1	<1.742±0.166
K7-10	4-Dec-03	0.232±0.053	<0.1±0.016	0.143±0.038	<0.475±0.067
K7-10	27-Jan-04	0.218±0.053	<0.1±0.012	0.137±0.041	<0.455±0.068
K7-10	3-May-04	0.114±0.037	<0.1±0.012	0.117±0.037	<0.331±0.054
K7-10	17-Aug-04	0.115±0.042	<0.1±0.007	0.129±0.042	<0.344±0.060
K7-10	23-Nov-04	0.127±0.044	<0.1±0.014	<0.1±0.031 E	<0.327±0.056
K7-10	3-Feb-05	0.152±0.045	<0.1±0.011	0.105±0.035	<0.357±0.058
K7-10	4-Apr-05	<0.1±0.017	<0.1±0.007	<0.1±0.017	<0.3±0.025
K7-10	2-Aug-05	<0.1±0.02	<0.1±0.016	<0.1±0.02	<0.3±0.032
K7-10	1-Nov-05	0.153±0.047	<0.1±0.023	0.109±0.04	<0.362±0.066
K7-10	4-Jan-06	0.165±0.051	<0.1±0.007	0.123±0.044	<0.388±0.068
K7-10	2-May-06	<0.1±0.035 H	<0.1±0.028 H	<0.1±0.024 H	<0.3±0.051
K7-10	17-Jul-06	<0.1±0.025	<0.1±0.007	<0.1±0.026	<0.3±0.037
K7-10	3-Oct-06	<0.1±0.04	<0.1±0.016	<0.1±0.026	<0.3±0.050
K7-10	3-Oct-06	0.161±0.047	<0.1±0.008	0.117±0.04	<0.378±0.062
MUL2	21-Aug-03	0.484±0.088	<0.1±0.018	0.449±0.081	<1.033±0.121
MUL2	28-Jul-04	2.43±0.3	<0.1±0.033 E	1.38±0.19	<3.91±0.357
MUL2	2-Aug-05	0.416±0.18	<0.1±0.04	0.233±0.13	<0.749±0.226
MUL2	8-Aug-06	0.415±0.079	<0.1±0.019	0.384±0.073	<0.899±0.109
NC7-25	31-Jul-03	18.1±1.9	0.885±0.13	15.1±1.6	34.085±2.487
NC7-25	5-Dec-03	17.9±1.9	0.735±0.11	14.9±1.6	33.535±2.486
NC7-25	4-Mar-04	16.5±1.7	0.724±0.11	13.8±1.4	31.024±2.205

Table A-4. Ground/surface water alpha spectrometric analyses for uranium isotopes (pCi/L) in samples collected from the Pit 7 Complex between July 1, 2003 and December 31, 2006.

Location	Sample Date	Uranium 233+234 (pCi/L)	Uranium 235+236 (pCi/L)	Uranium 238 (pCi/L)	Calculated Total Uranium** by alpha spec. (pCi/L)
NC7-25	29-Apr-04	13.6±1.5	0.72±0.12	11.5±1.2	25.82±1.925
NC7-25	22-Jul-04	16.6±1.8	0.605±0.11	13.9±1.5	31.105±2.346
NC7-25	29-Oct-04	18±1.9	0.866±0.13	14.5±1.5	33.366±2.424
NC7-25	25-Jan-05	16.9±1.8	0.703±0.12	14.2±1.5	31.803±2.346
NC7-25	6-Apr-05	17.8±1.9	0.672±0.11	14.8±1.6	33.272±2.486
NC7-25	12-Jul-05	17.9±1.9	0.978±0.15	15.1±1.6	33.978±2.488
NC7-25	26-Oct-05	17.3±1.8	0.699±0.12	14.2±1.5	32.199±2.346
NC7-25	5-Jan-06	17.6±1.9	0.755±0.13	14.9±1.6	33.255±2.487
NC7-25	24-Apr-06	16.7±1.8	0.884±0.17	13.5±1.5	31.084±2.349
NC7-25	10-Jul-06	17.2±1.8	0.68±0.11	14.1±1.5	31.98±2.346
NC7-25	4-Oct-06	16.5±1.8	0.796±0.14	13.7±1.5	30.996±2.347
NC7-26	12-Sep-03	0.138±0.042	<0.1±0.016	<0.1±0.027 E	<0.338±0.052
NC7-26	12-Dec-03	0.164±0.052	<0.1±0.015	<0.023±0.037	<0.287±0.066
NC7-26	27-Jan-04	0.133±0.038	<0.1±0.012	<0.1±0.033	<0.333±0.052
NC7-26	29-Apr-04	0.143±0.044	<0.1±0.019	0.112±0.038	<0.355±0.061
NC7-26	10-Aug-04	0.119±0.043	<0.1±0.007	<0.1±0.036 E	<0.319±0.057
NC7-26	2-Nov-04	0.145±0.043	<0.1±0.019	0.11±0.038	<0.355±0.060
NC7-26	27-Jan-05	0.115±0.043	<0.1±0.016	<0.1±0.035	<0.315±0.058
NC7-26	14-Apr-05	0.19±0.056	<0.1±0.018	0.118±0.047	<0.408±0.075
NC7-26	12-Jul-05	0.122±0.082	<0.1±0.025	0.112±0.062	<0.334±0.106
NC7-26	20-Oct-05	<0.1±0.036	<0.1±0.014	0.12±0.037	<0.32±0.053
NC7-26	10-Jan-06	0.12±0.035	<0.1±0.01	<0.1±0.03	<0.32±0.047
NC7-26	27-Apr-06	0.14±0.054	<0.1±0.018	0.114±0.045	<0.354±0.073
NC7-26	10-Jul-06	0.14±0.04	<0.1±0.011	0.123±0.035	<0.363±0.054
NC7-26	2-Oct-06	<0.1±0.043	<0.1±0.008	0.1±0.036	<0.3±0.057
NC7-34	31-Jul-03	3.93±0.48	0.181±0.058	5.87±0.69	9.981±0.843
NC7-47	5-Aug-03	1.18±0.15	<0.1±0.013	0.548±0.085	<1.828±0.173
NC7-47	5-Dec-03	1.35±0.17	<0.1±0.015 E	0.623±0.095	<2.073±0.195
NC7-47	8-Mar-04	1.24±0.18	<0.1±0.022	0.61±0.11	<1.95±0.212
NC7-47	26-Apr-04	1.2±0.14	<0.1±0.02 E	0.618±0.083	<1.918±0.164
NC7-47	29-Jul-04	1.11±0.15	<0.1±0.02 E	0.609±0.094	<1.819±0.178
NC7-47	29-Jul-04	1.2±0.16	<0.1±0.015 E	0.622±0.097	<1.922±0.188
NC7-47	28-Oct-04	1.26±0.17	<0.1±0.018 E	0.605±0.1	<1.965±0.198
NC7-47	26-Jan-05	1.28±0.18	<0.1±0.026	0.62±0.1	<2±0.208
NC7-47	26-Apr-05	1.1±0.17	<0.1±0.025	0.677±0.12	<1.877±0.210
NC7-47	7-Jul-05	1.3±0.19	<0.1±0.026	0.688±0.12	<2.088±0.226
NC7-47	7-Jul-05	1.34±0.19	<0.1±0.026	0.727±0.12	<2.167±0.226
NC7-47	19-Oct-05	1.18±0.17	<0.1±0.025	0.6±0.1	<1.88±0.199
NC7-47	19-Jan-06	1.34±0.18	<0.1±0.025	0.638±0.11	<2.078±0.212
NC7-47	4-Apr-06	1.25±0.19	<0.1±0.024	0.598±0.11	<1.948±0.221
NC7-47	6-Jul-06	1.21±0.17	<0.1±0.02	0.625±0.11	<1.935±0.203
NC7-47	3-Oct-06	1.3±0.16	<0.1±0.018	0.648±0.092	<2.048±0.185
NC7-48	5-Aug-03	2.34±0.28	0.214±0.052	7.07±0.77	9.624±0.821
NC7-48	9-Dec-03	2.28±0.28	0.23±0.058	7.07±0.78	9.58±0.831

Table A-4. Ground/surface water alpha spectrometric analyses for uranium isotopes (pCi/L) in samples collected from the Pit 7 Complex between July 1, 2003 and December 31, 2006.

Location	Sample Date	Uranium 233+234 (pCi/L)	Uranium 235+236 (pCi/L)	Uranium 238 (pCi/L)	Calculated Total Uranium** by alpha spec. (pCi/L)
NC7-48	9-Dec-03	2.3±0.29	0.155±0.047	7.24±0.8	9.695±0.852
NC7-48	9-Mar-04	3.2±0.38	0.247±0.061	10.8±1.2	14.247±1.260
NC7-48	28-Apr-04	3.54±0.38	0.273±0.049	11.2±1.2	15.013±1.260
NC7-48	10-Aug-04	2.37±0.3	0.192±0.054	7.52±0.83	10.082±0.884
NC7-48	2-Nov-04	2.32±0.28	0.209±0.057	7.56±0.82	10.089±0.868
NC7-48	3-Feb-05	3.1±0.36	0.246±0.058	10.1±1.1	13.446±1.159
NC7-48	6-Apr-05	3.82±0.44	0.299±0.064	13.3±1.4	17.419±1.469
NC7-48	11-Jul-05	2.65±0.35	0.229±0.074	8.59±0.97	11.469±1.034
NC7-48	20-Oct-05	2.37±0.3	0.181±0.054	7.17±0.8	9.721±0.856
NC7-48	13-Jan-06	2.01±0.24	0.113±0.038	6.47±0.7	8.593±0.741
NC7-48	25-Apr-06	2.54±0.32	0.184±0.059	8.39±0.93	11.114±0.985
NC7-48	6-Jul-06	1.32±0.18	0.139±0.043	4.18±0.47	5.639±0.505
NC7-48	2-Oct-06	1.52±0.22	0.162±0.055	4.94±0.58	6.622±0.623
NC7-50	31-Jul-03	0.67±0.11	<0.1±0.017	0.442±0.082	<1.212±0.138

Notes:

pCi/L = Picocuries per liter.

E = The analyte was detected below LLNL reporting limit, but above analytical laboratory minimum detection limit.

H = Sample analyzed outside of holding time, sample results should be evaluated.

** Total Uranium calculated outside of database just for this data table.

Table A-5. Ground and surface water mass spectrometric analyses for thorium isotopes (pCi/L) in samples collected from the Pit 7 Complex between July 1, 2003 and December 31, 2006.

Location	Sample Date	Thorium 228 by mass measurement (pCi/L)	Thorium 230 by mass measurment (pCi/L)	Thorium 232 by mass measurement (pCi/L)
K7-01	9-Sep-03			0.00016±0.0000175
K7-01	9-Sep-03	<0.25±0.035 E	<0.15±0.052	<0.15±0.006
K7-01	2-Dec-03			0.00018±0.0000408
K7-01	2-Dec-03	<0.25±0.025 E	<0.15±0.051	<0.15±0.006
K7-01	21-Jan-04			0.00018±0.0000209
K7-01	21-Jan-04	<0.25±0.028	<0.15±0.055	<0.15±0.018
K7-01	21-Jan-04	<0.25±0.034	<0.15±0.05	<0.15±0.008
K7-01	28-Apr-04			0.00054±0.00007
K7-01	28-Apr-04	<0.25±0.09	0.165±0.11	<0.15±0.022
K7-01	4-Aug-04			<0.0004±0.0000037 E
K7-01	4-Aug-04	<0.25±0.027	<0.15±0.053	<0.15±0.011
K7-01	2-Nov-04			<0.0004±0.0000415 E
K7-01	2-Nov-04	<0.25±0.02	<0.15±0.046	<0.15±0.013
K7-01	24-Jan-05			<0.0004±0.000014
K7-01	24-Jan-05			<0.0004±0.0000015
K7-01	24-Jan-05	<0.25±0.018	<0.15±0.055	<0.15±0.012
K7-01	24-Jan-05	<0.25±0.029	<0.15±0.058	<0.15±0.015
K7-01	5-Apr-05			<0.0004±0.000014
K7-01	5-Apr-05	<0.25±0.025	<0.15±0.051	<0.15±0.006
K7-01	11-Jul-05			<0.0004±0.000011
K7-01	11-Jul-05	<0.25±0.041	<0.15±0.056	<0.15±0.024
K7-01	24-Oct-05			<0.0004±0.00001
K7-01	24-Oct-05	<0.25±0.026	<0.15±0.062	<0.15±0.015
K7-01	3-Jan-06			<0.0004±0.0000055
K7-01	3-Jan-06			<0.0004±0.0000052
K7-01	3-Jan-06	<0.25±0.03	<0.15±0.052	<0.15±0.007
K7-01	3-Jan-06	<0.25±0.025	<0.15±0.049	<0.15±0.012
K7-01	13-Apr-06			<0.0004±0.0000058
K7-01	13-Apr-06	<0.25±0.026	<0.15±0.053	<0.15±0.02
K7-01	5-Jul-06			<0.0004±0.0000083
K7-01	5-Jul-06	<0.25±0.029	<0.15±0.063	<0.15±0.012
K7-01	9-Oct-06			<0.0004±0.0000078
K7-01	9-Oct-06	<0.25±0.026	<0.15±0.052	<0.15±0.02
K7-03	17-Sep-03			<0.0001±0.0000015
K7-03	17-Sep-03	<0.25±0.018	<0.15±0.055	<0.15±0.006
K7-03	9-Dec-03			0.00035±0.0000087
K7-03	9-Dec-03	<0.25±0.038	<0.15±0.076	<0.15±0.019
K7-03	21-Jan-04	<0.25±0.031	<0.15±0.063	<0.15±0.016
K7-03	27-Jan-04			<0.0001±0.0000018
K7-03	20-Apr-04			<0.0004±0.0000019
K7-03	20-Apr-04	<0.25±0.041 E	<0.15±0.063	<0.15±0.008
K7-03	10-Aug-04			<0.0004±0.0000028 E

Table A-5. Ground and surface water mass spectrometric analyses for thorium isotopes (pCi/L) in samples collected from the Pit 7 Complex between July 1, 2003 and December 31, 2006.

Location	Sample Date	Thorium 228 by mass measurement (pCi/L)	Thorium 230 by mass measurment (pCi/L)	Thorium 232 by mass measurement (pCi/L)
K7-03	10-Aug-04	<0.25±0.024 E	<0.15±0.06	<0.15±0.012
K7-03	29-Oct-04			<0.0004±0.0000061 E
K7-03	29-Oct-04	<0.25±0.02	<0.15±0.047	<0.15±0.013
K7-03	25-Jan-05			<0.0004±0.0000038
K7-03	25-Jan-05	<0.25±0.018	<0.15±0.049	<0.15±0.012
K7-03	14-Apr-05			<0.0004±0.0000028
K7-03	14-Apr-05			<0.0004±0.0000023
K7-03	14-Apr-05	<0.25±0.025	<0.15±0.043	<0.15±0.012
K7-03	14-Apr-05	<0.25±0.021	<0.15±0.062	<0.15±0.007
K7-03	12-Jul-05			<0.0004±0.000055
K7-03	12-Jul-05	<0.25±0.024	<0.15±0.053	<0.15±0.018
K7-03	27-Oct-05			<0.0004±0.0000043
K7-03	27-Oct-05			<0.0004±0.0000059
K7-03	27-Oct-05	<0.25±0.022	<0.15±0.055	<0.15±0.016
K7-03	27-Oct-05	<0.25±0.027	<0.15±0.048	<0.15±0.016
K7-03	5-Jan-06			<0.0004±0.000017
K7-03	5-Jan-06	<0.25±0.037	<0.15±0.049	<0.15±0.012
K7-03	24-Apr-06			<0.0004±0.000006
K7-03	24-Apr-06			<0.0004±0.000003
K7-03	24-Apr-06	<0.25±0.028	<0.15±0.056	<0.15±0.014
K7-03	24-Apr-06	<0.25±0.026	<0.15±0.059	<0.15±0.02
K7-03	6-Jul-06			<0.0004±0.0000069
K7-03	6-Jul-06	<0.25±0.017	<0.15±0.055	<0.15±0.011
K7-03	4-Oct-06			<0.0004±0.0000088
K7-03	4-Oct-06	<0.25±0.031	<0.15±0.046	<0.15±0.01
K7-06	5-Aug-03	<0.25±0.022	<0.15±0.059	<0.15±0.015
K7-06	4-Dec-03	<0.25±0.058	<0.15±0.058	<0.15±0.014
K7-06	27-Jan-04	<0.25±0.02	<0.15±0.052	<0.15±0.007
K7-06	2-Jun-04			<0.0004±0.0000044 E
K7-06	2-Jun-04	<0.25±0.019	<0.15±0.056	<0.15±0.006
K7-06	2-Jun-04	<0.25±0.017	<0.15±0.058	<0.15±0.017
K7-06	18-Aug-04	<0.25±0.02	<0.15±0.054	<0.15±0.02
K7-06	4-Nov-04	<0.25±0.17	<0.15±0.051	<0.15±0.007
K7-06	4-Nov-04	<0.25±0.08	<0.15±0.047	<0.15±0.013
K7-06	1-Feb-05	<0.25±0.022	<0.15±0.058	<0.15±0.015
K7-06	5-Apr-05	<0.25±0.028	<0.15±0.05	<0.15±0.017
K7-06	3-Aug-05	<0.25±0.027	<0.15±0.047	<0.15±0.013
K7-06	31-Oct-05	<0.25±0.036	<0.15±0.091	<0.15±0.018
K7-06	13-Jan-06	<0.25±0.032	<0.15±0.045	<0.15±0.006
K7-06	25-Apr-06	<0.25±0.043	<0.15±0.064	<0.15±0.011
K7-06	5-Jul-06	<0.25±0.022	0.321±0.091	<0.15±0.007
K7-06	3-Oct-06	<0.25±0.025	<0.15±0.042	<0.15±0.012

Table A-5. Ground and surface water mass spectrometric analyses for thorium isotopes (pCi/L) in samples collected from the Pit 7 Complex between July 1, 2003 and December 31, 2006.

Location	Sample Date	Thorium 228 by mass measurement (pCi/L)	Thorium 230 by mass measurment (pCi/L)	Thorium 232 by mass measurement (pCi/L)
K7-09	12-Sep-03	<0.25±0.011	<0.15±0.045	<0.15±0.011
K7-09	12-Sep-03	<0.25±0.018	<0.15±0.055	<0.15±0.006
K7-09	4-Dec-03	<0.25±0.031	<0.15±0.061	<0.15±0.015
K7-09	26-Jan-04	<0.25±0.018	<0.15±0.044	<0.15±0.012
K7-09	3-May-04			0.00034±0.00003
K7-09	3-May-04	<0.25±0.055 E	<0.15±0.046	<0.15±0.007
K7-09	17-Aug-04	<0.25±0.025	<0.15±0.066	<0.15±0.016
K7-09	4-Nov-04	0.723±0.3	<0.15±0.048	<0.15±0.007
K7-09	3-Feb-05	<0.25±0.024	<0.15±0.056	<0.15±0.008
K7-09	10-Feb-05	<0.25±0.025	<0.15±0.05	<0.15±0.012
K7-09	24-Feb-05	<0.25±0.015	<0.15±0.051	<0.15±0.015
K7-09	4-Apr-05	<0.25±0.025	<0.15±0.043	<0.15±0.006
K7-09	2-Aug-05	<0.25±0.019	<0.15±0.044	<0.15±0.019
K7-09	1-Nov-05	<0.25±0.031	<0.15±0.07	<0.15±0.015
K7-09	4-Jan-06	<0.25±0.02	<0.15±0.047	<0.15±0.013
K7-09	2-May-06	<0.25±0.35	<0.15±0.059	<0.15±0.017
K7-09	17-Jul-06	<0.25±0.022	<0.15±0.066	<0.15±0.015
K7-09	17-Jul-06	<0.25±0.018	<0.15±0.054	<0.15±0.012
K7-09	4-Oct-06	<0.25±0.032	<0.15±0.047	<0.15±0.016
K7-10	31-Jul-03	<0.25±0.031	<0.15±0.056	<0.15±0.006
K7-10	4-Dec-03	<0.25±0.029	<0.15±0.058	<0.15±0.014
K7-10	27-Jan-04	<0.25±0.02	<0.15±0.059	<0.15±0.013
K7-10	3-May-04	<0.25±0.028 E	<0.15±0.044	<0.15±0.011
K7-10	17-Aug-04	<0.25±0.022	<0.15±0.05	<0.15±0.007
K7-10	23-Nov-04	<0.25±0.022	<0.15±0.043	<0.15±0.007
K7-10	3-Feb-05	<0.25±0.033	<0.15±0.051	<0.15±0.013
K7-10	4-Apr-05	<0.25±0.019	<0.15±0.051	<0.15±0.013
K7-10	2-Aug-05	<0.25±0.032	<0.15±0.047	<0.15±0.016
K7-10	1-Nov-05	<0.25±0.026	<0.15±0.068	<0.15±0.017
K7-10	4-Jan-06	<0.25±0.019	<0.15±0.047	<0.15±0.014
K7-10	2-May-06	<0.25±0.26	<0.15±0.069	<0.15±0.017
K7-10	17-Jul-06	<0.25±0.031	<0.15±0.055	<0.15±0.016
K7-10	3-Oct-06	<0.25±0.028	<0.15±0.049	<0.15±0.014
K7-10	3-Oct-06	<0.25±0.024	<0.15±0.048	<0.15±0.018
NC7-12	31-Aug-04			0.0026±0.00011
NC7-12	4-Aug-05			0.00082±0.000021
NC7-12	16-Aug-06			0.0024±0.000028
NC7-15	1-Jun-04			0.00073±0.0000433
NC7-15	26-Apr-05			0.00065±0.000021
NC7-15	17-May-06			0.00042±0.0000035
NC7-16	29-Jan-05			0.00076±0.000024
NC7-16	18-May-05			0.0013±0.000076

Table A-5. Ground and surface water mass spectrometric analyses for thorium isotopes (pCi/L) in samples collected from the Pit 7 Complex between July 1, 2003 and December 31, 2006.

Location	Sample Date	Thorium 228 by mass measurement (pCi/L)	Thorium 230 by mass measurment (pCi/L)	Thorium 232 by mass measurement (pCi/L)
NC7-16	18-May-05			0.00094±0.000037
NC7-16	4-Aug-05			0.00048±0.000038
NC7-16	17-Nov-05			0.0011±0.000033
NC7-16	17-Nov-05			0.00084±0.00005
NC7-16	23-May-06			0.0033±0.000068
NC7-16	23-May-06			0.0025±0.000047
NC7-16	6-Sep-06			<0.0004±0.000012
NC7-16	17-Oct-06			0.0031±0.00004
NC7-17	31-Oct-05			0.00086±0.000056
NC7-17	30-May-06			0.0033±0.000019
NC7-17	1-Dec-06			<0.0004±0.00000085
NC7-18	16-Dec-03			0.00014±0.0000035
NC7-18	29-Nov-04			<0.0004±0.000012 E
NC7-18	8-Jun-05			0.0019±0.000064
NC7-18	8-Dec-05			0.00059±0.000012
NC7-18	30-May-06			0.0057±0.000028
NC7-18	28-Nov-06			0.001±0.000021
NC7-19	11-May-04			<0.0004±0.0000047
NC7-19	11-May-04			<0.0004±0.0000062 E
NC7-19	26-Apr-05			<0.0004±0.0000042
NC7-19	26-Apr-05			<0.0004±0.0000044
NC7-19	1-Jun-06			<0.0004±0.0000063
NC7-20	17-Oct-03			0.00098±0.0000543
NC7-20	30-Nov-04			0.00126±0.00003
NC7-20	2-Jun-05			0.0039±0.000068
NC7-20	22-May-06			0.007±0.000068
NC7-21	29-Nov-04			<0.0004±0.0000555 E
NC7-21	2-Jun-05			0.0064±0.00015
NC7-21	18-May-06			0.00055±0.000031
NC7-25	31-Jul-03			0.00051±0.0000556
NC7-25	31-Jul-03	<0.25±0.023	<0.15±0.055	<0.15±0.008
NC7-25	5-Dec-03			0.0004±0.0000345
NC7-25	5-Dec-03	<0.25±0.041	<0.15±0.068	<0.15±0.014
NC7-25	4-Mar-04			0.00025±0.00011
NC7-25	4-Mar-04	<0.25±0.015	<0.1±0.059 B	<0.15±0.015
NC7-25	29-Apr-04			<0.0004±0.0000029
NC7-25	29-Apr-04	<0.25±0.018	<0.15±0.053	<0.15±0.018
NC7-25	22-Jul-04	<0.25±0.023	<0.15±0.054	<0.15±0.008
NC7-25	29-Oct-04	<0.25±0.014	<0.15±0.049	<0.15±0.007
NC7-25	25-Jan-05	<0.25±0.013	<0.15±0.052	<0.15±0.013
NC7-25	6-Apr-05			<0.0004±0.000008
NC7-25	6-Apr-05	<0.25±0.025	<0.15±0.049	<0.15±0.012

Table A-5. Ground and surface water mass spectrometric analyses for thorium isotopes (pCi/L) in samples collected from the Pit 7 Complex between July 1, 2003 and December 31, 2006.

Location	Sample Date	Thorium 228 by mass measurement (pCi/L)	Thorium 230 by mass measurment (pCi/L)	Thorium 232 by mass measurement (pCi/L)
NC7-25	12-Jul-05			0.002±0.000088
NC7-25	12-Jul-05	<0.25±0.021	<0.15±0.056	<0.15±0.014
NC7-25	26-Oct-05			<0.0004±0.000034
NC7-25	26-Oct-05	<0.25±0.027	<0.15±0.052	<0.15±0.02
NC7-25	5-Jan-06			<0.0004±0.00003
NC7-25	5-Jan-06	<0.25±0.026	<0.15±0.045	<0.15±0.006
NC7-25	24-Apr-06			0.00043±0.000032
NC7-25	24-Apr-06	<0.25±0.027	<0.15±0.053	<0.15±0.013
NC7-25	10-Jul-06			<0.0004±0.0000082
NC7-25	10-Jul-06	<0.25±0.028	<0.15±0.045	<0.15±0.011
NC7-25	4-Oct-06			<0.0004±0.000032
NC7-25	4-Oct-06	<0.25±0.035	<0.15±0.045	<0.15±0.015
NC7-26	12-Sep-03	<0.25±0.019	<0.15±0.059	<0.15±0.006
NC7-26	8-Dec-03			<0.0001±0.0000012
NC7-26	12-Dec-03	<0.25±0.063	<0.151±0.095	<0.15±0.032
NC7-26	27-Jan-04	<0.25±0.017	<0.15±0.069	<0.15±0.009
NC7-26	29-Apr-04			<0.0004±0.000035
NC7-26	29-Apr-04	<0.25±0.032	<0.15±0.079	<0.15±0.032
NC7-26	10-Aug-04	<0.25±0.026	<0.15±0.052	<0.15±0.013
NC7-26	2-Nov-04	<0.25±0.024	<0.15±0.056	<0.15±0.008
NC7-26	27-Jan-05	<0.25±0.022	<0.15±0.052	<0.15±0.015
NC7-26	14-Apr-05			<0.0004±0.000011
NC7-26	14-Apr-05	<0.25±0.024	<0.15±0.049	<0.15±0.012
NC7-26	12-Jul-05			<0.0004±0.00000035
NC7-26	12-Jul-05	<0.25±0.02	<0.15±0.058	<0.15±0.013
NC7-26	20-Oct-05			<0.0004±0.00000078
NC7-26	20-Oct-05	<0.25±0.039	<0.15±0.052	<0.15±0.013
NC7-26	10-Jan-06			<0.0004±0.0000014
NC7-26	10-Jan-06	<0.25±0.022	<0.15±0.044	<0.15±0.011
NC7-26	27-Apr-06			<0.0004±0.00000054
NC7-26	27-Apr-06	<0.25±0.035	<0.15±0.056	<0.15±0.014
NC7-26	10-Jul-06			<0.0004±0.00000069
NC7-26	10-Jul-06	<0.25±0.029	<0.15±0.047	<0.15±0.012
NC7-26	2-Oct-06			<0.0004±0.00000082
NC7-26	2-Oct-06	<0.25±0.024	<0.15±0.04	<0.15±0.016
NC7-34	31-Jul-03	<0.25±0.019	<0.15±0.059	<0.15±0.013
NC7-34	24-Feb-04			0.00053±0.000041
NC7-34	11-May-04			0.00037±0.00004
NC7-34	30-Aug-04			0.00046±0.0000369
NC7-34	29-Nov-04			0.00204±0.00031
NC7-34	29-Jan-05			0.0029±0.000049
NC7-34	1-Jun-05			0.0034±0.00014

Table A-5. Ground and surface water mass spectrometric analyses for thorium isotopes (pCi/L) in samples collected from the Pit 7 Complex between July 1, 2003 and December 31, 2006.

Location	Sample Date	Thorium 228 by mass measurement (pCi/L)	Thorium 230 by mass measurment (pCi/L)	Thorium 232 by mass measurement (pCi/L)
NC7-34	1-Jun-05			0.0039±0.00011
NC7-34	4-Aug-05			<0.0004±0.000015
NC7-34	22-Nov-05			0.0011±0.000034
NC7-34	22-Nov-05			0.0011±0.000044
NC7-34	10-Feb-06			0.0006±0.000017
NC7-34	6-Jun-06			0.0013±0.000027
NC7-34	6-Jun-06			0.0011±0.000017
NC7-34	18-Sep-06			0.0017±0.000026
NC7-34	1-Dec-06			<0.0004±0.0000061
NC7-36	11-May-04			<0.0004±0.0000067
NC7-36	1-Jun-05			0.014±0.0006
NC7-36	4-Aug-05			0.00071±0.0000073
NC7-36	18-Sep-06			0.0029±0.000037
NC7-37	5-Jun-06			0.0084±0.00012
NC7-37	28-Nov-06			0.0015±0.00012
NC7-40	11-Jul-03			0.00085±0.0000727
NC7-40	8-Aug-03			0.00121±0.00015
NC7-40	5-Sep-03			0.00081±0.00019
NC7-40	10-Oct-03			0.00085±0.00015
NC7-40	31-Oct-03			0.00084±0.0000417
NC7-40	7-Nov-03			0.00072±0.00026
NC7-40	12-Dec-03			0.00089±0.00024
NC7-40	9-Jan-04			0.00099±0.00011
NC7-40	6-Feb-04			0.00085±0.0000872
NC7-40	4-Mar-04			0.0014±0.0000928
NC7-40	10-May-04			0.00183±0.0002
NC7-40	30-Nov-04			0.0028±0.0004
NC7-40	18-Feb-05			0.0006±0.000054
NC7-40	8-Aug-05			0.0011±0.000094
NC7-40	11-Oct-05			0.0036±0.00014
NC7-40	8-Feb-06			0.0014±0.000099
NC7-40	1-Jun-06			0.0009±0.00011
NC7-40	15-Aug-06			0.0014±0.000066
NC7-40	18-Oct-06			0.0035±0.000092
NC7-47	5-Aug-03	<0.25±0.031	<0.15±0.05	<0.15±0.013
NC7-47	5-Dec-03	<0.25±0.045	<0.15±0.06	<0.15±0.015
NC7-47	8-Mar-04	<0.25±0.016	<0.15±0.078	<0.15±0.016
NC7-47	26-Apr-04			<0.0004±0.0000068
NC7-47	26-Apr-04	<0.25±0.026	<0.15±0.052	<0.15±0.019
NC7-47	29-Jul-04	<0.25±0.027	<0.15±0.053	<0.15±0.013
NC7-47	29-Jul-04	<0.25±0.013	<0.15±0.063	<0.15±0.006
NC7-47	28-Oct-04	<0.25±0.02	<0.15±0.046	<0.15±0.013

Table A-5. Ground and surface water mass spectrometric analyses for thorium isotopes (pCi/L) in samples collected from the Pit 7 Complex between July 1, 2003 and December 31, 2006.

Location	Sample Date	Thorium 228 by mass measurement (pCi/L)	Thorium 230 by mass measurment (pCi/L)	Thorium 232 by mass measurement (pCi/L)
NC7-47	26-Jan-05	<0.25±0.018	<0.15±0.049	<0.15±0.012
NC7-47	26-Apr-05			<0.0004±0.0000044
NC7-47	26-Apr-05	<0.25±0.031	<0.15±0.061	<0.15±0.008
NC7-47	7-Jul-05			<0.0004±0.0000018
NC7-47	7-Jul-05			0.0027±0.000041
NC7-47	7-Jul-05	<0.25±0.035	<0.15±0.07	<0.15±0.018
NC7-47	7-Jul-05	<0.25±0.051	<0.15±0.068	<0.15±0.034
NC7-47	19-Oct-05			<0.0004±0.0000036
NC7-47	19-Oct-05	<0.25±0.02	<0.15±0.046	<0.15±0.013
NC7-47	19-Jan-06			<0.0004±0.0000031
NC7-47	19-Jan-06	<0.25±0.022	<0.15±0.049	<0.15±0.016
NC7-47	4-Apr-06			<0.0004±0.0000019
NC7-47	4-Apr-06	<0.25±0.023	<0.15±0.06	<0.15±0.007
NC7-47	6-Jul-06			<0.0004±0.0000051
NC7-47	6-Jul-06	<0.25±0.03	<0.15±0.056	<0.15±0.01
NC7-47	3-Oct-06			0.00046±0.0000054
NC7-47	3-Oct-06	<0.25±0.023	<0.15±0.046	<0.15±0.017
NC7-48	5-Aug-03			0.00051±0.0000456
NC7-48	5-Aug-03	<0.25±0.018	<0.15±0.053	<0.15±0.006
NC7-48	9-Dec-03	<0.25±0.033	<0.15±0.067	<0.15±0.017
NC7-48	9-Dec-03	<0.25±0.055 E	<0.15±0.072	<0.15±0.018
NC7-48	17-Dec-03			0.00022±0.000014
NC7-48	9-Mar-04			0.00026±0.0000152
NC7-48	9-Mar-04	<0.25±0.022	<0.15±0.05	<0.15±0.012
NC7-48	28-Apr-04			0.00068±0.00003
NC7-48	28-Apr-04	<0.25±0.032	<0.15±0.097 E	<0.15±0.016
NC7-48	10-Aug-04			<0.0004±0.000036 E
NC7-48	10-Aug-04	<0.25±0.026	<0.15±0.052	<0.15±0.013
NC7-48	2-Nov-04			0.00065±0.00004
NC7-48	2-Nov-04	<0.25±0.033	<0.15±0.058	<0.15±0.016
NC7-48	3-Feb-05			0.00043±0.000019
NC7-48	3-Feb-05	<0.25±0.017	<0.15±0.058	<0.15±0.012
NC7-48	6-Apr-05			<0.0004±0.000032
NC7-48	6-Apr-05	<0.25±0.018	<0.15±0.048	<0.15±0.012
NC7-48	11-Jul-05			<0.0004±0.0000043
NC7-48	11-Jul-05	<0.25±0.026	<0.15±0.069	<0.15±0.017
NC7-48	20-Oct-05			<0.0004±0.000022
NC7-48	20-Oct-05	<0.25±0.03	<0.15±0.052	<0.15±0.012
NC7-48	13-Jan-06			0.00042±0.00002
NC7-48	13-Jan-06	<0.25±0.023	<0.15±0.045	<0.15±0.017
NC7-48	25-Apr-06			<0.0004±0.000023
NC7-48	25-Apr-06	<0.25±0.029	<0.15±0.05	<0.15±0.014

Table A-5. Ground and surface water mass spectrometric analyses for thorium isotopes (pCi/L) in samples collected from the Pit 7 Complex between July 1, 2003 and December 31, 2006.

Location	Sample Date	Thorium 228 by mass measurement (pCi/L)	Thorium 230 by mass measurment (pCi/L)	Thorium 232 by mass measurement (pCi/L)
NC7-48	6-Jul-06			<0.0004±0.000003
NC7-48	6-Jul-06	<0.25±0.028	<0.15±0.061	<0.15±0.011
NC7-48	2-Oct-06			<0.0004±0.00001
NC7-48	2-Oct-06	<0.25±0.028	<0.15±0.042	<0.15±0.014
NC7-49A	31-Oct-03			0.00013±0.0000033
NC7-49A	6-Dec-04			<0.0004±0.000008 E
NC7-49A	15-Nov-05			<0.0004±0.000012
NC7-49A	13-Nov-06			0.0006±0.000011
NC7-50	11-Nov-03			<0.0001±0.0000058
NC7-50	1-Mar-04			0.00112±0.0000157
NC7-50	1-Mar-04			0.0000937±0.0000014
NC7-50	19-May-04			<0.0004±0.0000033 E
NC7-50	7-Sep-04			0.00065±0.0000169
NC7-50	29-Nov-04			<0.0004±0.000004 E
NC7-50	29-Jan-05			<0.0004±0.0000011
NC7-50	19-May-05			0.00045±0.000033
NC7-50	18-Aug-05			<0.0004±0.0000037
NC7-50	19-Oct-05			<0.0004±0.0000049
NC7-50	16-Jan-06			<0.0004±0.000013
NC7-50	10-Apr-06			<0.0004±0.0000018
NC7-50	23-Aug-06			0.00057±0.000013
NC7-50	18-Oct-06			<0.0004±0.000003
NC7-51	14-Aug-03			0.00083±0.00011
NC7-51	16-Oct-03			0.00155±0.0002
NC7-51	21-Jan-04			0.0006±0.0000501
NC7-51	10-May-04			0.00114±0.0001
NC7-51	30-Aug-04			0.00222±0.00024
NC7-51	18-Feb-05			0.00051±0.000037
NC7-51	20-May-05			0.0016±0.00012
NC7-51	10-Aug-05			0.0012±0.00007
NC7-51	10-Oct-05			0.001±0.00011
NC7-51	23-May-06			0.002±0.000078
NC7-51	14-Sep-06			0.00075±0.000022
NC7-51	5-Dec-06			0.00089±0.00025
NC7-52	11-Nov-03			<0.0001±0.0000031
NC7-52	10-Jun-04			<0.0004±0.0000038 E
NC7-52	1-Jun-05			<0.0004±0.0000015
NC7-52	22-May-06			<0.0004±0.0000016
NC7-53	11-Nov-03			<0.0001±0.0000007
NC7-53	19-Nov-04			0.0329±0.001
NC7-53	31-Oct-05			<0.0004±0.0000044
NC7-53	6-Dec-06			<0.0004±0.0000028

Table A-5. Ground and surface water mass spectrometric analyses for thorium isotopes (pCi/L) in samples collected from the Pit 7 Complex between July 1, 2003 and December 31, 2006.

Location	Sample Date	Thorium 228 by mass measurement (pCi/L)	Thorium 230 by mass measurment (pCi/L)	Thorium 232 by mass measurement (pCi/L)
NC7-60	19-May-04			<0.0004±0.0000171 E
NC7-60	23-May-05			<0.0004±0.0000034
NC7-60	1-Jun-06			0.00069±0.0000042
NC7-63	8-Aug-05			0.0011±0.00011
NC7-63	10-Oct-05			0.0016±0.0002
NC7-63	1-Feb-06			0.0031±0.00038
NC7-63	23-May-06			<0.0004±0.0000081
NC7-63	14-Sep-06			0.0015±0.000074
NC7-63	4-Dec-06			0.0012±0.000036
NC7-64	6-Aug-03			0.001±0.00013
NC7-64	11-Nov-03			0.00091±0.0000473
NC7-64	3-Mar-04			0.00094±0.00034
NC7-64	11-May-04			0.00144±0.00012
NC7-64	31-Aug-04			0.00105±0.00013
NC7-64	6-Dec-04			0.0014±0.00007
NC7-64	3-Mar-05			0.00045±0.000018
NC7-64	8-Aug-05			0.00051±0.000052
NC7-64	10-Oct-05			0.00041±0.000058
NC7-64	10-Feb-06			0.00059±0.000071
NC7-64	23-May-06			<0.0004±0.000027
NC7-64	14-Sep-06			0.00067±0.000034
NC7-64	4-Dec-06			0.00065±0.000048
NC7-65	3-Dec-03			<0.0001±0.0000031
NC7-65	1-Nov-04			<0.0004±0.000004 E
NC7-65	27-Oct-05			<0.0004±0.0000026
NC7-65	1-Dec-06			<0.0004±0.0000065
NC7-67	13-Nov-03			<0.0001±0.0000006
NC7-67	10-May-04			0.00032±0.00003
NC7-67	18-May-05			0.018±0.00067
NC7-67	24-May-06			<0.0004±0.00000085
NC7-68	24-May-04			0.00058±0.0000277
NC7-68	18-May-05			<0.0004±0.0000034
NC7-68	24-May-06			<0.0004±0.00000083
NC7-75	3-Dec-03			0.00014±0.0000024
NC7-75	20-May-04			<0.0004±0.0000124 E
NC7-75	19-Nov-04			0.00206±0.000045
NC7-75	20-May-05			0.0014±0.000025
NC7-75	11-Oct-05			0.0014±0.000018
NC7-75	25-May-06			<0.0004±0.000001
NC7-75	1-Dec-06			<0.0004±0.000002
NC7-76	25-Oct-03			<0.0001±0.0000052
NC7-76	11-May-04			<0.0004±0.0000031

Table A-5. Ground and surface water mass spectrometric analyses for thorium isotopes (pCi/L) in samples collected from the Pit 7 Complex between July 1, 2003 and December 31, 2006.

Location	Sample Date	Thorium 228 by mass measurement (pCi/L)	Thorium 230 by mass measurment (pCi/L)	Thorium 232 by mass measurement (pCi/L)
NC7-76	25-Aug-05			<0.0004±0.0000093
NC7-76	18-May-06			<0.0004±0.0000042
SPRING13	20-Dec-04			<0.0004±0.0000012 E
SPRING13	7-Dec-05			<0.0004±0.0000015
SPRING24	8-Jun-05			0.0011±0.000027
SPRING24	10-Apr-06			0.025±0.00021
W-865-01	17-May-05			0.0031±0.000049
W-865-01	24-Aug-05			0.0012±0.000031
W-865-03	20-May-05			0.00045±0.0000062
W-865-03	24-Aug-05			<0.0004±0.0000045
W-865-07	13-May-05			<0.0004±0.0000045
W-865-07	18-Aug-05			<0.0004±0.0000022
W-865-1804	18-Dec-03			0.0001±0.0000024
W-865-1804	4-Mar-04			0.00023±0.000004
W-865-1804	9-Jun-04			0.0006±0.0000207
W-PIT7-02	24-Nov-03			<0.0001±0.0000014
W-PIT7-02	10-May-04			<0.0004±0.0000019
W-PIT7-02	7-Jun-05			<0.0004±0.0000027
W-PIT7-02	24-May-06			<0.0004±0.0000024
W-PIT7-03	25-Nov-03			0.0002±0.0000187
W-PIT7-03	10-May-04			0.00029±0.000013
W-PIT7-03	24-May-06			<0.0004±0.000013
W-PIT7-10	4-Dec-03			<0.0001±0.0000024
W-PIT7-11	27-Oct-05			<0.0004±0.0000044
W-PIT7-12	17-Dec-03			<0.0001±0.0000019
W-PIT7-12	1-Nov-04			0.00045±0.000014
W-PIT7-12	20-May-05			0.00063±0.000019
W-PIT7-12	23-Aug-05			<0.0004±0.0000043
W-PIT7-12	30-Nov-05			<0.0004±0.0000069
W-PIT7-12	16-Feb-06			<0.0004±0.0000027
W-PIT7-12	24-May-06			<0.0004±0.0000086
W-PIT7-12	20-Sep-06			0.0049±0.00031
W-PIT7-12	14-Nov-06			<0.0004±0.0000026
W-PIT7-13	3-Dec-03			0.00012±0.0000228
W-PIT7-13	2-Nov-04			<0.0004±0.0000255 E
W-PIT7-13	23-May-05			<0.0004±0.0000051
W-PIT7-13	23-Aug-05			<0.0004±0.0000037
W-PIT7-13	27-Oct-05			<0.0004±0.0000052
W-PIT7-13	21-Feb-06			<0.0004±0.0000011
W-PIT7-13	30-May-06			<0.0004±0.0000037
W-PIT7-13	6-Sep-06			<0.0004±0.0000031
W-PIT7-13	6-Dec-06			<0.0004±0.000035

Table A-5. Ground and surface water mass spectrometric analyses for thorium isotopes (pCi/L) in samples collected from the Pit 7 Complex between July 1, 2003 and December 31, 2006.

Location	Sample Date	Thorium 228 by mass measurement (pCi/L)	Thorium 230 by mass measurment (pCi/L)	Thorium 232 by mass measurement (pCi/L)
W-PIT7-14	18-Dec-03			<0.0001±0.000002
W-PIT7-14	9-Mar-04			<0.0004±0.000008
W-PIT7-14	14-Jun-04			<0.0004±0.0000061 E
W-PIT7-14	13-Sep-04			<0.0004±0.0000065 E
W-PIT7-14	2-Nov-04			<0.0004±0.0000043 E
W-PIT7-14	7-Mar-05			<0.0004±0.00000036
W-PIT7-14	20-May-05			<0.0004±0.0000019
W-PIT7-14	23-Aug-05			<0.0004±0.0000015
W-PIT7-14	24-Oct-05			<0.0004±0.0000017
W-PIT7-14	16-Feb-06			<0.0004±0.0000021
W-PIT7-14	24-May-06			<0.0004±0.0000016
W-PIT7-14	20-Sep-06			<0.0004±0.0000017
W-PIT7-14	14-Nov-06			<0.0004±0.0000013
W-PIT7-15	4-Dec-03			<0.0001±0.0000005
W-PIT7-15	2-Nov-04			<0.0004±0.00001 E
W-PIT7-15	3-Nov-05			<0.0004±0.00000044
W-PIT7-15	7-Dec-06			0.00072±0.0000055
W-PIT7-16	28-Dec-04			<0.0004±0.0000011 E
W-PIT7-16	26-Apr-05			<0.0004±0.00000096
W-PIT7-16	18-May-06			<0.0004±0.00000063
W-PIT7-1860	7-Mar-05			<0.0004±0.0000012
W-PIT7-1860	15-Jun-05			<0.0004±0.0000021
W-PIT7-1860	17-Aug-05			<0.0004±0.0000016
W-PIT7-1860	31-Oct-05			<0.0004±0.00000072
W-PIT7-1861	7-Mar-05			0.00065±0.0000055
W-PIT7-1861	15-Jun-05			0.0012±0.000014
W-PIT7-1861	17-Aug-05			0.00066±0.0000082
W-PIT7-1861	31-Oct-05			0.0029±0.000036
W-PIT7-1903	11-Jul-03			0.00109±0.00022
W-PIT7-1903	8-Aug-03			0.00221±0.00014
W-PIT7-1903	5-Sep-03			0.00099±0.00015
W-PIT7-1903	10-Oct-03			0.00094±0.00012
W-PIT7-1903	7-Nov-03			0.00092±0.0000782
W-PIT7-1903	12-Dec-03			0.00102±0.0000972
W-PIT7-1903	9-Jan-04			0.00115±0.000079
W-PIT7-1903	6-Feb-04			0.0012±0.0000671
W-PIT7-1903	4-Mar-04			0.00102±0.0000731
W-PIT7-1903	30-Oct-04			0.00239±0.00018
W-PIT7-1903	9-Mar-05			0.0032±0.00015
W-PIT7-1903	11-May-05			0.0012±0.00021
W-PIT7-1903	9-Aug-05			0.005±0.00016
W-PIT7-1903	7-Nov-05			0.0043±0.00021

Table A-5. Ground and surface water mass spectrometric analyses for thorium isotopes (pCi/L) in samples collected from the Pit 7 Complex between July 1, 2003 and December 31, 2006.

Location	Sample Date	Thorium 228 by mass measurement (pCi/L)	Thorium 230 by mass measurment (pCi/L)	Thorium 232 by mass measurement (pCi/L)
W-PIT7-1903	13-Feb-06			0.0027±0.00011
W-PIT7-1903	9-May-06			0.0017±0.000095
W-PIT7-1903	9-Aug-06			0.019±0.00017
W-PIT7-1904	11-Jul-03			0.00077±0.00011
W-PIT7-1904	8-Aug-03			0.00154±0.00016
W-PIT7-1904	5-Sep-03			0.0008±0.0000787
W-PIT7-1904	10-Oct-03			0.00086±0.0000742
W-PIT7-1904	7-Nov-03			0.00092±0.0000612
W-PIT7-1904	12-Dec-03			0.00108±0.00017
W-PIT7-1904	9-Jan-04			0.00132±0.0000961
W-PIT7-1904	6-Feb-04			0.00242±0.00012
W-PIT7-1904	4-Mar-04			0.00091±0.00019
W-PIT7-1904	30-Oct-04			0.00096±0.0001
W-PIT7-1904	9-Mar-05			0.00087±0.000044
W-PIT7-1904	11-May-05			0.00086±0.000074
W-PIT7-1904	9-Aug-05			0.0027±0.00012
W-PIT7-1904	7-Nov-05			0.00083±0.000079
W-PIT7-1904	13-Feb-06			0.0013±0.000081
W-PIT7-1904	9-May-06			0.0006±0.000034
W-PIT7-1904	9-Aug-06			0.0044±0.000099
W-PIT7-1905	11-Jul-03			0.00064±0.0000299
W-PIT7-1905	8-Aug-03			0.00056±0.0000365
W-PIT7-1905	5-Sep-03			0.00028±0.0000589
W-PIT7-1905	10-Oct-03			0.00027±0.0000185
W-PIT7-1905	7-Nov-03			0.0006±0.0000653
W-PIT7-1905	12-Dec-03			0.0006±0.0001
W-PIT7-1905	9-Jan-04			0.00073±0.0000434
W-PIT7-1905	6-Feb-04			0.00133±0.0000485
W-PIT7-1905	4-Mar-04			0.00091±0.0000498
W-PIT7-1905	30-Oct-04			0.00098±0.00011
W-PIT7-1905	9-Mar-05			0.0022±0.00063
W-PIT7-1905	11-May-05			0.0012±0.000089
W-PIT7-1905	9-Aug-05			0.0042±0.00011
W-PIT7-1905	7-Nov-05			0.0011±0.000034
W-PIT7-1905	13-Feb-06			0.005±0.000072
W-PIT7-1905	9-May-06			0.0027±0.000098
W-PIT7-1905	9-Aug-06			0.0013±0.000043
W-PIT7-1907	11-Jul-03			<0.0001±0.0000058
W-PIT7-1907	8-Aug-03			<0.0001±0.0000033
W-PIT7-1907	5-Sep-03			<0.0001±0.0000029
W-PIT7-1907	10-Oct-03			<0.0001±0.0000012
W-PIT7-1907	7-Nov-03			<0.0001±0.0000044

Table A-5. Ground and surface water mass spectrometric analyses for thorium isotopes (pCi/L) in samples collected from the Pit 7 Complex between July 1, 2003 and December 31, 2006.

Location	Sample Date	Thorium 228 by mass measurement (pCi/L)	Thorium 230 by mass measurment (pCi/L)	Thorium 232 by mass measurement (pCi/L)
W-PIT7-1907	12-Dec-03			<0.0001±0.0000016
W-PIT7-1907	9-Jan-04			<0.0001±0.0000008
W-PIT7-1907	6-Feb-04			<0.0001±0.0000023
W-PIT7-1907	4-Mar-04			0.00012±0.0000017
W-PIT7-1907	30-Oct-04			<0.0004±0.0000024 E
W-PIT7-1907	9-Mar-05			<0.0004±0.00000025
W-PIT7-1907	11-May-05			<0.0004±0.0000032
W-PIT7-1907	9-Aug-05			<0.0004±0.0000011
W-PIT7-1907	7-Nov-05			<0.0004±0.0000017
W-PIT7-1907	14-Feb-06			<0.0004±0.0000024
W-PIT7-1907	9-May-06			<0.0004±0.0000016
W-PIT7-1907	15-Aug-06			<0.0004±0.0000018
W-PIT7-1915	11-Jul-03			0.00016±0.0000027
W-PIT7-1915	8-Aug-03			0.0006±0.0000098
W-PIT7-1915	5-Sep-03			0.00029±0.0000079
W-PIT7-1915	10-Oct-03			0.00017±0.0000021
W-PIT7-1915	7-Nov-03			0.00012±0.0000025
W-PIT7-1915	12-Dec-03			0.00017±0.000003
W-PIT7-1915	9-Jan-04			0.00015±0.0000021
W-PIT7-1915	6-Feb-04			0.00015±0.0000023
W-PIT7-1915	4-Mar-04			0.0001±0.000009
W-PIT7-1915	30-Oct-04			<0.0004±0.0000048 E
W-PIT7-1915	9-Mar-05			<0.0004±0.00000032
W-PIT7-1915	11-May-05			<0.0004±0.0000021
W-PIT7-1915	9-Aug-05			<0.0004±0.0000057
W-PIT7-1915	7-Nov-05			<0.0004±0.0000022
W-PIT7-1915	14-Feb-06			<0.0004±0.0000017
W-PIT7-1915	9-May-06			<0.0004±0.00000095
W-PIT7-1915	9-Aug-06			<0.0004±0.0000022
W-PIT7-1916	11-Jul-03			0.00106±0.00059
W-PIT7-1916	8-Aug-03			0.00097±0.00013
W-PIT7-1916	5-Sep-03			0.00061±0.00018
W-PIT7-1916	10-Oct-03			0.00071±0.0000702
W-PIT7-1916	7-Nov-03			0.00063±0.0000605
W-PIT7-1916	12-Dec-03			0.00082±0.00015
W-PIT7-1916	9-Jan-04			0.00086±0.0000748
W-PIT7-1916	6-Feb-04			0.00086±0.00011
W-PIT7-1916	4-Mar-04			0.00073±0.00016
W-PIT7-1916	30-Oct-04			0.00052±0.0000422
W-PIT7-1916	9-Mar-05			0.00041±0.000043
W-PIT7-1916	11-May-05			0.0012±0.0001
W-PIT7-1916	9-Aug-05			0.0014±0.000051

Table A-5. Ground and surface water mass spectrometric analyses for thorium isotopes (pCi/L) in samples collected from the Pit 7 Complex between July 1, 2003 and December 31, 2006.

Location	Sample Date	Thorium 228 by mass measurement (pCi/L)	Thorium 230 by mass measurment (pCi/L)	Thorium 232 by mass measurement (pCi/L)
W-PIT7-1916	7-Nov-05			0.00064±0.00011
W-PIT7-1916	14-Feb-06			0.0029±0.00032
W-PIT7-1916	11-May-06			0.0011±0.00004
W-PIT7-1916	9-Aug-06			0.0014±0.00023
W-PIT7-1917	11-Jul-03			0.00019±0.0000394
W-PIT7-1917	8-Aug-03			0.00072±0.0000671
W-PIT7-1917	5-Sep-03			0.00046±0.0000908
W-PIT7-1917	10-Oct-03			0.00036±0.0000323
W-PIT7-1917	7-Nov-03			0.00037±0.0000314
W-PIT7-1917	12-Dec-03			0.00048±0.000069
W-PIT7-1917	9-Jan-04			0.00067±0.0000421
W-PIT7-1917	6-Feb-04			0.0012±0.0000709
W-PIT7-1917	4-Mar-04			0.00031±0.0000934
W-PIT7-1917	30-Oct-04			0.00042±0.0000602
W-PIT7-1917	9-Mar-05			0.00097±0.000064
W-PIT7-1917	11-May-05			0.00087±0.000062
W-PIT7-1917	9-Aug-05			0.0013±0.000044
W-PIT7-1917	7-Nov-05			<0.0004±0.000042
W-PIT7-1917	14-Feb-06			0.0011±0.000048
W-PIT7-1917	11-May-06			0.0014±0.000055
W-PIT7-1917	9-Aug-06			0.0016±0.000092
W-PIT7-1918	11-Jul-03			0.00032±0.0000367
W-PIT7-1918	8-Aug-03			0.00066±0.0000559
W-PIT7-1918	5-Sep-03			0.00027±0.0000683
W-PIT7-1918	10-Oct-03			0.00034±0.0000565
W-PIT7-1918	7-Nov-03			0.00056±0.0000453
W-PIT7-1918	12-Dec-03			0.00045±0.0000594
W-PIT7-1918	9-Jan-04			0.0005±0.000026
W-PIT7-1918	6-Feb-04			0.00109±0.0000441
W-PIT7-1918	4-Mar-04			0.00033±0.0000566
W-PIT7-1918	30-Oct-04			<0.0004±0.0000566 E
W-PIT7-1918	9-Mar-05			0.00074±0.000051
W-PIT7-1918	11-May-05			0.00072±0.000093
W-PIT7-1918	9-Aug-05			0.0044±0.00018
W-PIT7-1918	7-Nov-05			0.0011±0.00007
W-PIT7-1918	16-Feb-06			0.0013±0.000072
W-PIT7-1918	11-May-06			0.0015±0.000091
W-PIT7-1918	15-Aug-06			0.0013±0.000044
W-PIT7-1919	11-Jul-03			0.00091±0.0000699
W-PIT7-1919	8-Aug-03			0.00126±0.0002
W-PIT7-1919	5-Sep-03			0.00086±0.00016
W-PIT7-1919	10-Oct-03			0.00094±0.00012

Table A-5. Ground and surface water mass spectrometric analyses for thorium isotopes (pCi/L) in samples collected from the Pit 7 Complex between July 1, 2003 and December 31, 2006.

Location	Sample Date	Thorium 228 by mass measurement (pCi/L)	Thorium 230 by mass measurment (pCi/L)	Thorium 232 by mass measurement (pCi/L)
W-PIT7-1919	7-Nov-03			0.00105±0.00011
W-PIT7-1919	12-Dec-03			0.00088±0.00012
W-PIT7-1919	9-Jan-04			0.00107±0.0000755
W-PIT7-1919	6-Feb-04			0.0012±0.00016
W-PIT7-1919	4-Mar-04			0.00116±0.0000943
W-PIT7-1919	30-Oct-04			0.00073±0.00011
W-PIT7-1919	9-Mar-05			0.00073±0.000061
W-PIT7-1919	11-May-05			<0.0004±0.000035
W-PIT7-1919	9-Aug-05			0.0016±0.00011
W-PIT7-1919	7-Nov-05			0.0016±0.00013
W-PIT7-1919	16-Feb-06			0.0015±0.00011
W-PIT7-1919	11-May-06			0.0013±0.00009
W-PIT7-1919	15-Aug-06			0.0019±0.000057
W-PIT7-2141	16-Nov-05			0.00073±0.000019

Notes:

pCi/L = Picocuries per liter.

B = Analyte found in method blank

E = The analyte was detected below LLNL reporting limit, but above analytical laboratory minimum detection limit.

Table A-6. Ground and surface water analyses for nitrogenous compounds (mg/L) in samples collected from the Pit 7 Complex between July 1, 2003 and December 31, 2006.

Location	Sample Date	Nitrate and Nitrite as N (mg/L)	Nitrate as N (mg/L)	Nitrite as N (mg/L)	Nitrite as NO_2 (mg/L)	Nitrate as NO_3 (mg/L)
K7-01	9-Sep-03					43
K7-01	2-Dec-03					44.1
K7-01	21-Jan-04					43.5
K7-01	21-Jan-04					43.2
K7-01	28-Apr-04					42
K7-01	4-Aug-04					41.3
K7-01	2-Nov-04					40.6
K7-01	24-Jan-05					41.6
K7-01	24-Jan-05					41.7
K7-01	5-Apr-05					45
K7-01	5-Apr-05		10	<0.02	<0.065 H	44 H
K7-01	11-Jul-05					39.8 D
K7-01	24-Oct-05					38.5 D
K7-01	3-Jan-06					41
K7-01	3-Jan-06					41
K7-01	13-Apr-06					45
K7-01	5-Jul-06					45
K7-01	9-Oct-06					48
K7-03	17-Sep-03					25.2
K7-03	9-Dec-03					18.7
K7-03	21-Jan-04					25.5
K7-03	20-Apr-04					24.8
K7-03	10-Aug-04					32.5
K7-03	29-Oct-04					31
K7-03	25-Jan-05					25.9
K7-03	14-Apr-05		6.8	<0.02		30 H
K7-03	14-Apr-05		7	<0.02		31 H
K7-03	14-Apr-05					34
K7-03	14-Apr-05					33
K7-03	12-Jul-05					33.7
K7-03	27-Oct-05					31.6 D
K7-03	27-Oct-05					32.1 D
K7-03	5-Jan-06					30
K7-03	24-Apr-06					27
K7-03	24-Apr-06					27
K7-03	6-Jul-06					34

Table A-6. Ground and surface water analyses for nitrogenous compounds (mg/L) in samples collected from the Pit 7 Complex between July 1, 2003 and December 31, 2006.

Location	Sample Date	Nitrate and Nitrite as N (mg/L)	Nitrate as N (mg/L)	Nitrite as N (mg/L)	Nitrite as NO_2 (mg/L)	Nitrate as NO_3 (mg/L)
K7-03	4-Oct-06					37
K7-06	5-Aug-03					13.2
K7-06	4-Dec-03					1.2
K7-06	27-Jan-04					14.8
K7-06	2-Jun-04					14.8
K7-06	2-Jun-04					14.6
K7-06	18-Aug-04					14.1
K7-06	4-Nov-04					14.8
K7-06	4-Nov-04					14.5
K7-06	1-Feb-05					15.2
K7-06	5-Apr-05					15
K7-06	5-Apr-05		3.4	<0.02	<0.065 H	15 H
K7-06	3-Aug-05					13.5
K7-06	31-Oct-05					12.8 D
K7-06	13-Jan-06					15
K7-06	25-Apr-06					16
K7-06	5-Jul-06					15
K7-06	2-Oct-06					16
K7-07	22-May-06					26
K7-09	9-Sep-03					<0.44
K7-09	9-Sep-03					<0.44
K7-09	3-Dec-03					<0.44
K7-09	26-Jan-04					<0.44
K7-09	3-May-04					<0.44
K7-09	17-Aug-04					<0.44
K7-09	4-Nov-04					<0.44
K7-09	24-Feb-05					<0.44
K7-09	4-Apr-05		<0.5	<0.02		<0.44 H
K7-09	4-Apr-05					<0.5
K7-09	2-Aug-05					<0.5
K7-09	1-Nov-05					<0.5
K7-09	4-Jan-06					<0.5
K7-09	2-May-06					<0.5
K7-09	17-Jul-06					<0.5
K7-09	17-Jul-06					<0.5
K7-09	4-Oct-06					<0.5

Table A-6. Ground and surface water analyses for nitrogenous compounds (mg/L) in samples collected from the Pit 7 Complex between July 1, 2003 and December 31, 2006.

Location	Sample Date	Nitrate and Nitrite as N (mg/L)	Nitrate as N (mg/L)	Nitrite as N (mg/L)	Nitrite as NO_2 (mg/L)	Nitrate as NO_3 (mg/L)
K7-10	31-Jul-03					0.96
K7-10	4-Dec-03					13.7
K7-10	27-Jan-04					0.52
K7-10	3-May-04					<0.44
K7-10	17-Aug-04					<0.44
K7-10	23-Nov-04					<0.44 E
K7-10	3-Feb-05					1.4
K7-10	4-Apr-05		<0.5 E	0.056		0.58 H
K7-10	4-Apr-05					1.1
K7-10	2-Aug-05					1.45 E
K7-10	1-Nov-05					0.996
K7-10	4-Jan-06					1.5
K7-10	2-May-06					1.1
K7-10	17-Jul-06					0.72
K7-10	2-Oct-06					1.6
K7-10	2-Oct-06					0.55
MUL2	21-Aug-03					12
MUL2	28-Jul-04					9.31
MUL2	2-Aug-05					8.4 D
MUL2	25-Jan-06					10 D
MUL2	8-Aug-06					9.7
NC7-12	15-May-06					27 H
NC7-12	16-Aug-06					35 D
NC7-12	17-Oct-06					26 D
NC7-15	9-Dec-03					8 D
NC7-15	1-Jun-04					38 D
NC7-15	26-Apr-05					36
NC7-15	26-Apr-05		8	<0.5		36 H
NC7-15	26-Apr-05		7.4 D	<0.1		33 D
NC7-15	26-Apr-05					33 D
NC7-15	15-May-06					33 DH
NC7-15	17-May-06					35
NC7-16	18-May-05		8.4	<0.1		37
NC7-16	18-May-05		9 D	<0.1		40 D
NC7-19	11-May-04					26
NC7-19	11-May-04					27 D

Table A-6. Ground and surface water analyses for nitrogenous compounds (mg/L) in samples collected from the Pit 7 Complex between July 1, 2003 and December 31, 2006.

Location	Sample Date	Nitrate and Nitrite as N (mg/L)	Nitrate as N (mg/L)	Nitrite as N (mg/L)	Nitrite as NO_2 (mg/L)	Nitrate as NO_3 (mg/L)
NC7-19	26-Apr-05		6.2 D	<0.1		28 D
NC7-19	26-Apr-05		6.3 D	<0.1		28 D
NC7-19	26-Apr-05					28 D
NC7-19	26-Apr-05					28 D
NC7-19	1-Jun-06					29 D
NC7-20	2-Jun-05		8.2 D	<0.1		36 D
NC7-21	2-Jun-05		8.9 D	<0.1		39 D
NC7-25	31-Jul-03					36.4
NC7-25	5-Dec-03					36.8
NC7-25	4-Mar-04					37.2
NC7-25	29-Apr-04					37.2
NC7-25	22-Jul-04					36.2
NC7-25	29-Oct-04					36
NC7-25	25-Jan-05					36.1
NC7-25	6-Apr-05		8.3	<0.02		37 H
NC7-25	6-Apr-05					37
NC7-25	12-Jul-05					39.3
NC7-25	26-Oct-05					30.8 D
NC7-25	5-Jan-06					36
NC7-25	24-Apr-06					38
NC7-25	10-Jul-06					37
NC7-25	4-Oct-06					38
NC7-26	12-Sep-03					<0.44
NC7-26	8-Dec-03					<0.44
NC7-26	27-Jan-04					<0.44
NC7-26	29-Apr-04					<0.44
NC7-26	5-Aug-04					<0.44
NC7-26	2-Nov-04					<0.44 E
NC7-26	27-Jan-05					<0.44 E
NC7-26	6-Apr-05		<0.1	<0.02		<0.44 H
NC7-26	6-Apr-05					<0.44
NC7-26	12-Jul-05					<0.5
NC7-26	20-Oct-05					<0.5
NC7-26	10-Jan-06					<0.5
NC7-26	27-Apr-06					<0.5
NC7-26	10-Jul-06					<0.5

Table A-6. Ground and surface water analyses for nitrogenous compounds (mg/L) in samples collected from the Pit 7 Complex between July 1, 2003 and December 31, 2006.

Location	Sample Date	Nitrate and Nitrite as N (mg/L)	Nitrate as N (mg/L)	Nitrite as N (mg/L)	Nitrite as NO_2 (mg/L)	Nitrate as NO_3 (mg/L)
NC7-26	2-Oct-06					<0.5
NC7-34	1-Jun-05		9 D	<0.1		40 D
NC7-34	1-Jun-05		7.3 D	<0.1		32 D
NC7-34	10-Feb-06					29 D
NC7-34	6-Jun-06					29 D
NC7-34	6-Jun-06					29 D
NC7-34	18-Sep-06					35
NC7-34	1-Dec-06					27 D
NC7-36	1-Jun-05		12 D	<0.1		52 D
NC7-36	6-Jun-06					44 D
NC7-36	18-Sep-06					38
NC7-36	1-Dec-06					30 D
NC7-37	5-Jun-06					30 D
NC7-37	19-Sep-06					31 D
NC7-37	28-Nov-06					29
NC7-40	4-Mar-04		9.59 H	<0.02 H		42.5 H
NC7-40	1-Jun-06					34 D
NC7-40	18-Oct-06					33
NC7-40	18-Oct-06					35 D
NC7-47	5-Aug-03					72
NC7-47	5-Dec-03					70.6
NC7-47	8-Mar-04					70.6
NC7-47	26-Apr-04					69.7
NC7-47	29-Jul-04					71.5
NC7-47	29-Jul-04					71.5
NC7-47	28-Oct-04					71.9 D
NC7-47	26-Jan-05					69.7
NC7-47	26-Apr-05		16	<0.5		72 H
NC7-47	26-Apr-05					78 D
NC7-47	5-Jul-05					64.2 DH
NC7-47	5-Jul-05					65.6 DH
NC7-47	19-Oct-05					60.5 D
NC7-47	19-Jan-06					69
NC7-47	4-Apr-06					71
NC7-47	6-Jul-06					68
NC7-47	3-Oct-06					74

Table A-6. Ground and surface water analyses for nitrogenous compounds (mg/L) in samples collected from the Pit 7 Complex between July 1, 2003 and December 31, 2006.

Location	Sample Date	Nitrate and Nitrite as N (mg/L)	Nitrate as N (mg/L)	Nitrite as N (mg/L)	Nitrite as NO_2 (mg/L)	Nitrate as NO_3 (mg/L)
NC7-48	5-Aug-03					19.7
NC7-48	9-Dec-03					20.1
NC7-48	9-Dec-03					20
NC7-48	9-Mar-04					19.6
NC7-48	28-Apr-04					18.6
NC7-48	10-Aug-04					18
NC7-48	2-Nov-04					18.9
NC7-48	3-Feb-05					18.9
NC7-48	6-Apr-05		4.3	<0.02		19 H
NC7-48	6-Apr-05					19
NC7-48	11-Jul-05					18.1 DE
NC7-48	20-Oct-05					14.9 D
NC7-48	13-Jan-06					17
NC7-48	25-Apr-06					17
NC7-48	6-Jul-06					9.9
NC7-48	2-Oct-06					13
NC7-49A	1-Jun-05		6.3 D	<0.1		28 D
NC7-50	19-May-05		35 D	<0.1		150 D
NC7-51	23-May-06					41
NC7-51	5-Dec-06					42
NC7-51	5-Dec-06					38 D
NC7-52	1-Jun-05		7.1 D	<0.1		31 D
NC7-52A	1-Jun-05		3.4 D	<0.1		15 D
NC7-53	8-Jun-05		5.3	<0.1		24
NC7-60	19-May-04					<0.1 L
NC7-60	23-May-05		0.11	<0.1		0.49
NC7-60	23-May-05					0.39
NC7-60	1-Jun-06					0.59
NC7-63	23-May-06					38 D
NC7-63	14-Sep-06					38 D
NC7-63	4-Dec-06					41 D
NC7-64	23-May-06					39 D
NC7-64	14-Sep-06					39 D
NC7-64	4-Dec-06					47
NC7-65	23-May-05		0.13	<0.1		0.57
NC7-67	18-May-05		<0.1	<0.1		0.37

Table A-6. Ground and surface water analyses for nitrogenous compounds (mg/L) in samples collected from the Pit 7 Complex between July 1, 2003 and December 31, 2006.

Location	Sample Date	Nitrate and Nitrite as N (mg/L)	Nitrate as N (mg/L)	Nitrite as N (mg/L)	Nitrite as NO_2 (mg/L)	Nitrate as NO_3 (mg/L)
NC7-68	18-May-05		3.9	<0.1		17
NC7-75	20-May-05		<0.1	<0.1		<0.1
NC7-76	11-May-04					21
NC7-76	25-Aug-05					25.4 D
NC7-76	18-May-06					12
SPRING13	20-Dec-04		2.35 D	<0.5		10.4 D
SPRING24	1-Mar-04		6.7	<0.1		30
SPRING24	8-Jun-04					5.6
SPRING24	8-Jun-05		0.46	<0.1		2.1
SPRING24	8-Jun-05					2.1
SPRING24	10-Apr-06					<0.1
W-865-01	6-Aug-03		2.7 H	<0.1 H		12 H
W-865-01	17-Nov-03		0.9	<0.1		4
W-865-01	3-Mar-04		6	<0.1		26
W-865-01	17-May-05		0.84	<0.1		3.7
W-865-01	11-Apr-06					12
W-865-01	30-Aug-06					4.4
W-865-03	6-Aug-03		15 DH	<0.1 H		66 DH
W-865-03	17-Nov-03		15 D	<0.1		65 D
W-865-03	3-Mar-04		10 D	<0.1		42 D
W-865-03	20-May-05		10 D	<0.1		46 D
W-865-03	11-Apr-06					37 D
W-865-03	19-Dec-06					41 D
W-865-04	6-Aug-03		7 DH	<0.1 H		30 DH
W-865-04	17-Nov-03		4.1	<0.1		18
W-865-04	24-Feb-04		0.7	<0.1		3.3
W-865-04	5-Apr-06					1.8
W-865-04	18-Oct-06					1.9
W-865-07	6-Aug-03		20 DH	<0.1 H		88 DH
W-865-07	2-Dec-03		20 D	<0.1		87 D
W-865-07	24-Feb-04		18 D	<0.1		79 D
W-865-07	13-May-05		17 D	<0.1		76 D
W-865-07	5-Apr-06					86 D
W-865-07	18-Oct-06					78 D
W-865-1804	9-Jun-04					33
W-865-1804	10-Mar-05		6.6	<0.1		29

Table A-6. Ground and surface water analyses for nitrogenous compounds (mg/L) in samples collected from the Pit 7 Complex between July 1, 2003 and December 31, 2006.

Location	Sample Date	Nitrate and Nitrite as N (mg/L)	Nitrate as N (mg/L)	Nitrite as N (mg/L)	Nitrite as NO_2 (mg/L)	Nitrate as NO_3 (mg/L)
W-865-1804	17-May-05		5.9	<0.1		26
W-PIT7-02	7-Jun-05		0.32	<0.1		1.4
W-PIT7-03	24-May-06					38 D
W-PIT7-03	5-Dec-06					39
W-PIT7-03	5-Dec-06					37 D
W-PIT7-10	22-May-06					41 D
W-PIT7-10	28-Nov-06					41 D
W-PIT7-12	20-May-05		11 D	<0.1		47 D
W-PIT7-13	23-May-05		13 D	<0.1		58 D
W-PIT7-14	18-Dec-03		1.1	0.8 DL		4.9
W-PIT7-14	9-Mar-04		0.2	0.5 D		0.7
W-PIT7-14	20-May-05		0.32	0.9 D		1.4
W-PIT7-15	12-Apr-06					<0.1
W-PIT7-15	7-Dec-06					<0.1
W-PIT7-16	28-Dec-04					<0.44
W-PIT7-16	27-Apr-05					<0.44
W-PIT7-16	27-Apr-05		<0.5	<0.5		<0.44 H
W-PIT7-16	18-May-06					<0.1
W-PIT7-1725	20-Aug-03		<0.1	<0.1		0.2
W-PIT7-1725	10-Mar-04		0.6	0.1		2.7
W-PIT7-1860	7-Mar-05		<1 D			
W-PIT7-1860	7-Mar-05			<0.1		<1 D
W-PIT7-1860	15-Jun-05					8.5
W-PIT7-1860	15-Jun-05		1.9	<0.1		
W-PIT7-1860	17-Aug-05					17
W-PIT7-1860	31-Oct-05					20.8 D
W-PIT7-1860	31-Oct-05		4.7 D	<0.5		20.8 D
W-PIT7-1860	31-Oct-05					22.5 D
W-PIT7-1861	7-Mar-05		5.7 D			
W-PIT7-1861	7-Mar-05			<0.1		
W-PIT7-1861	15-Jun-05					27
W-PIT7-1861	15-Jun-05		6	<0.1		
W-PIT7-1861	17-Aug-05					22.5 D
W-PIT7-1861	31-Oct-05		5.33 D	<0.5		23.6 D
W-PIT7-1861	31-Oct-05					22.5 D
W-PIT7-1903	11-Jul-03	8 DH	8 DH	<0.02		35 DH

Table A-6. Ground and surface water analyses for nitrogenous compounds (mg/L) in samples collected from the Pit 7 Complex between July 1, 2003 and December 31, 2006.

Location	Sample Date	Nitrate and Nitrite as N (mg/L)	Nitrate as N (mg/L)	Nitrite as N (mg/L)	Nitrite as NO_2 (mg/L)	Nitrate as NO_3 (mg/L)
W-PIT7-1903	8-Aug-03	3.9 H	3.9 H	<0.02 H		17 H
W-PIT7-1903	5-Sep-03	7.6 DH	7.6 DH	<0.02		34 DH
W-PIT7-1903	10-Oct-03	8.4 DH	8.4 DH	<0.02		37 DH
W-PIT7-1903	7-Nov-03	8.6 DH	8.6 DH	<0.02		38 DH
W-PIT7-1903	12-Dec-03	8.2 DH	8.2 DH	<0.02 H		35 DH
W-PIT7-1903	9-Jan-04	8.5 DH	8.5 DH	<0.02		38 DH
W-PIT7-1903	6-Feb-04	6.8 DH	6.8 DH	<0.02		30 DH
W-PIT7-1903	4-Mar-04		8.68 H	<0.02 H		38.4 H
W-PIT7-1904	11-Jul-03	9.7 DH	9.7 DH	<0.02		43 DH
W-PIT7-1904	8-Aug-03	9.1 DH	9.1 DH	<0.02 H		9.1 DH
W-PIT7-1904	5-Sep-03	8.7 DH	8.7 DH	<0.02		39 DH
W-PIT7-1904	10-Oct-03	10 DH	10 DH	<0.02		44 DH
W-PIT7-1904	7-Nov-03	9.1 DH	9.1 DH	<0.02		9.1 DH
W-PIT7-1904	12-Dec-03	9.2 DH	9.2 DH	<0.02 H		41 DH
W-PIT7-1904	9-Jan-04	9 DH	9 DH	<0.02		40 DH
W-PIT7-1904	6-Feb-04	8.7 DH	8.7 DH	<0.02		39 DH
W-PIT7-1904	4-Mar-04		9.26 H	<0.02 H		41 H
W-PIT7-1905	11-Jul-03	5.5 DH	24 DH	<0.02		24 DH
W-PIT7-1905	8-Aug-03	5.6 DH	5.6 DH	<0.02 H		25 DH
W-PIT7-1905	5-Sep-03	5.9 DH	5.9 DH	<0.02		26 DH
W-PIT7-1905	10-Oct-03	6.6 DH	9.3 DH	<0.02		41 DH
W-PIT7-1905	7-Nov-03	5.1 DH	5.1 DH	<0.02		23 DH
W-PIT7-1905	12-Dec-03	6.5 DH	6.5 DH	<0.02 H		29 DH
W-PIT7-1905	9-Jan-04	6.2 DH	6.2 DH	<0.02		27 DH
W-PIT7-1905	6-Feb-04	5.7 DH	5.7 DH	<0.02		25 DH
W-PIT7-1905	4-Mar-04		7.22 H	<0.02 H		31.9 H
W-PIT7-1907	11-Jul-03	<0.1 H	<0.1 H	0.08		<0.4 H
W-PIT7-1907	8-Aug-03	0.25 H	0.25 H	0.7 H		1.1 H
W-PIT7-1907	5-Sep-03	0.58 H	0.58 H	0.89		2.6 H
W-PIT7-1907	10-Oct-03	1.7 H	1.7 H	0.76		7.5 H
W-PIT7-1907	7-Nov-03	2.4 H	1.7 H	0.73		7.5 H
W-PIT7-1907	12-Dec-03	1.2 H	0.4 H	0.83 H		1.8 H
W-PIT7-1907	9-Jan-04	0.76 H	0.76 H	0.68		3.4 H
W-PIT7-1907	6-Feb-04	2 H	1.1 H	0.94		4.9 H
W-PIT7-1907	4-Mar-04		2.11 H	1.5 HD		9.35 H
W-PIT7-1915	11-Jul-03	0.1 H	0.1 H	0.06		0.44 H

Table A-6. Ground and surface water analyses for nitrogenous compounds (mg/L) in samples collected from the Pit 7 Complex between July 1, 2003 and December 31, 2006.

Location	Sample Date	Nitrate and Nitrite as N (mg/L)	Nitrate as N (mg/L)	Nitrite as N (mg/L)	Nitrite as NO_2 (mg/L)	Nitrate as NO_3 (mg/L)
W-PIT7-1915	8-Aug-03	<0.1 H	<0.1 H	0.041 H		<0.4 H
W-PIT7-1915	5-Sep-03	<0.1 H	<0.1 H	0.13		<0.4 H
W-PIT7-1915	10-Oct-03	1.9 H	1.9 H	0.12		8.4 H
W-PIT7-1915	7-Nov-03	1 H	1 H	0.028		4.4 H
W-PIT7-1915	12-Dec-03	0.88 H	0.88 H	<0.02 H		3.9 H
W-PIT7-1915	9-Jan-04	1.6 H	1.6 H	0.027		7.1 H
W-PIT7-1915	6-Feb-04	1.8 H	1.8 H	<0.02		8 H
W-PIT7-1915	4-Mar-04		2.1 HD	0.066 H		9.28 HD
W-PIT7-1916	11-Jul-03	7.9 DH	7.9 DH	<0.02		35 DH
W-PIT7-1916	8-Aug-03	7.4 DH	7.4 H	<0.02 H		33 H
W-PIT7-1916	5-Sep-03	7.6 DH	7.6 DH	<0.02		34 DH
W-PIT7-1916	10-Oct-03	8.3 DH	8.3 DH	<0.02		37 DH
W-PIT7-1916	7-Nov-03	7.7 DH	7.7 DH	<0.02		34 DH
W-PIT7-1916	12-Dec-03	6.9 DH	6.9 DH	<0.02 H		31 DH
W-PIT7-1916	9-Jan-04	7.2 DH	7.2 DH	<0.02		32 DH
W-PIT7-1916	6-Feb-04	6.5 DH	6.5 DH	<0.02		29 DH
W-PIT7-1916	4-Mar-04		7.25 H	<0.02 H		32.1 H
W-PIT7-1917	11-Jul-03	8.4 DH	8.4 DH	<0.02		37 DH
W-PIT7-1917	8-Aug-03	8.2 DH	8.2 DH	<0.02 H		36 DH
W-PIT7-1917	5-Sep-03	8.2 DH	8.2 DH	<0.02		363 DHS
W-PIT7-1917	10-Oct-03	9.2 DH	98.2 DH	<0.02		41 DH
W-PIT7-1917	7-Nov-03	9 DH	9 DH	<0.02		40 DH
W-PIT7-1917	12-Dec-03	8.9 DH	8.9 DH	<0.02 H		39 DH
W-PIT7-1917	9-Jan-04	8.6 DH	8.6 DH	<0.02		38 DH
W-PIT7-1917	6-Feb-04	8.6 DH	8.6 DH	<0.02		38 DH
W-PIT7-1917	4-Mar-04		9.07 H	0.029 H		40.2 H
W-PIT7-1918	11-Jul-03	7.7 DH	7.7 DH	<0.02		34 DH
W-PIT7-1918	8-Aug-03	7.4 DH	7.4 DH	<0.02 H		33 DH
W-PIT7-1918	5-Sep-03	7.6 DH	7.6 DH	<0.02 H		34 DH
W-PIT7-1918	10-Oct-03	8.3 DH	83 DH	<0.02		37 DH
W-PIT7-1918	7-Nov-03	8 DH	8 DH	<0.02		35 DH
W-PIT7-1918	12-Dec-03	8 DH	8 DH	<0.02 H		35 DH
W-PIT7-1918	9-Jan-04	7.9 DH	7.9 DH	<0.02		35 DH
W-PIT7-1918	6-Feb-04	7.8 DH	7.8 DH	<0.02		35 DH
W-PIT7-1918	4-Mar-04		7.68 H	<0.02 H		34 H
W-PIT7-1919	11-Jul-03	8.2 DH	8.2 H	<0.02		36 H

Table A-6. Ground and surface water analyses for nitrogenous compounds (mg/L) in samples collected from the Pit 7 Complex between July 1, 2003 and December 31, 2006.

Location	Sample Date	Nitrate and Nitrite as N (mg/L)	Nitrate as N (mg/L)	Nitrite as N (mg/L)	Nitrite as NO_2 (mg/L)	Nitrate as NO_3 (mg/L)
W-PIT7-1919	8-Aug-03	8 DH	8 DH	<0.02 H		35 DH
W-PIT7-1919	5-Sep-03	8.1 DH	8.1 DH	<0.02		36 DH
W-PIT7-1919	10-Oct-03	8.8 DH	8.8 DH	<0.02		39 DH
W-PIT7-1919	7-Nov-03	8.5 DH	8.5 DH	<0.02		38 DH
W-PIT7-1919	12-Dec-03	8.4 DH	8.4 DH	<0.02 H		37 DH
W-PIT7-1919	9-Jan-04	8.8 DH	8.8 DH	<0.02		39 DH
W-PIT7-1919	6-Feb-04	7.8 DH	7.8 DH	<0.02		35 DH
W-PIT7-1919	4-Mar-04		8.4 H	<0.02 H		37.2 H
W-PIT7-2141	16-Nov-05					27.1 D
W-PIT7-2141	16-Nov-05		7.12 D	<0.5 E		31.6 D

Notes:

mg/L = Milligrams per liter.
D = Analysis performed at a secondary dilution or concentration (i.e., vapor samples).
E = The analyte was detected below LLNL reporting limit, but above analytical laboratory minimum detection limit.
H = Sample analyzed outside of holding time, sample results should be evaluated.
L = Spike accuracy not within control limits.
S = Analytical results for this sample are suspect.

Table A-7. Ground and surface water analyses for perchlorate (mg/L) in samples collected from the Pit 7 Complex between July 1, 2003 and December 31, 2006.

Location	Sample Date	Perchlorate (ug/L)
K7-01	9-Sep-03	19
K7-01	2-Dec-03	18
K7-01	21-Jan-04	18 H
K7-01	21-Jan-04	19 H
K7-01	28-Apr-04	17
K7-01	4-Aug-04	23
K7-01	2-Nov-04	21
K7-01	24-Jan-05	17
K7-01	24-Jan-05	18
K7-01	5-Apr-05	18
K7-01	11-Jul-05	16.7
K7-01	24-Oct-05	16.7
K7-01	3-Jan-06	21
K7-01	3-Jan-06	21
K7-01	13-Apr-06	15
K7-01	5-Jul-06	25
K7-01	9-Oct-06	16
K7-03	17-Sep-03	11
K7-03	9-Dec-03	9.7
K7-03	21-Jan-04	15 H
K7-03	20-Apr-04	12
K7-03	10-Aug-04	14
K7-03	29-Oct-04	19
K7-03	25-Jan-05	9.8
K7-03	14-Apr-05	11
K7-03	14-Apr-05	29
K7-03	12-Jul-05	11
K7-03	27-Oct-05	13.9
K7-03	27-Oct-05	13.3
K7-03	5-Jan-06	16
K7-03	24-Apr-06	9
K7-03	24-Apr-06	9.4
K7-03	6-Jul-06	12
K7-03	4-Oct-06	13
K7-06	5-Aug-03	<4
K7-06	4-Dec-03	<4
K7-06	27-Jan-04	<4 H
K7-06	2-Jun-04	<4
K7-06	2-Jun-04	<4
K7-06	18-Aug-04	<4

Table A-7. Ground and surface water analyses for perchlorate (mg/L) in samples collected from the Pit 7 Complex between July 1, 2003 and December 31, 2006.

Location	Sample Date	Perchlorate (ug/L)
K7-06	4-Nov-04	<4
K7-06	4-Nov-04	<4
K7-06	1-Feb-05	<4
K7-06	5-Apr-05	<4
K7-06	3-Aug-05	<4
K7-06	31-Oct-05	<4
K7-06	13-Jan-06	<4
K7-06	25-Apr-06	<4
K7-06	5-Jul-06	<4
K7-06	2-Oct-06	<4
K7-09	9-Sep-03	<4
K7-09	9-Sep-03	<4
K7-09	3-Dec-03	<4
K7-09	26-Jan-04	<4 H
K7-09	3-May-04	<4
K7-09	17-Aug-04	<4
K7-09	4-Nov-04	<4
K7-09	24-Feb-05	<4
K7-09	4-Apr-05	<4
K7-09	2-Aug-05	<4
K7-09	1-Nov-05	<4
K7-09	4-Jan-06	<4
K7-09	2-May-06	<4
K7-09	17-Jul-06	<4
K7-09	17-Jul-06	<4
K7-09	4-Oct-06	<4
K7-10	31-Jul-03	<4
K7-10	4-Dec-03	<4
K7-10	27-Jan-04	<4 H
K7-10	3-May-04	<4
K7-10	17-Aug-04	<4
K7-10	23-Nov-04	<4
K7-10	3-Feb-05	<4
K7-10	4-Apr-05	<4
K7-10	2-Aug-05	<4
K7-10	1-Nov-05	<4
K7-10	4-Jan-06	<4 E
K7-10	2-May-06	<4
K7-10	17-Jul-06	<4
K7-10	2-Oct-06	<4

Table A-7. Ground and surface water analyses for perchlorate (mg/L) in samples collected from the Pit 7 Complex between July 1, 2003 and December 31, 2006.

Location	Sample Date	Perchlorate (ug/L)
K7-10	2-Oct-06	<4
MUL2	21-Aug-03	<4
MUL2	28-Jul-04	<4
MUL2	2-Aug-05	<4
MUL2	25-Jan-06	<4
MUL2	8-Aug-06	<4
NC7-12	29-Nov-04	<4
NC7-12	29-Nov-04	<4
NC7-12	29-Jan-05	<4
NC7-12	26-Apr-05	<4
NC7-12	4-Aug-05	<4 E
NC7-12	9-Nov-05	8.62
NC7-12	30-Jan-06	<4
NC7-12	16-Aug-06	<4
NC7-12	17-Oct-06	<4
NC7-15	1-Jun-04	<4
NC7-15	26-Apr-05	<4
NC7-15	26-Apr-05	<4
NC7-15	15-May-06	<4
NC7-15	17-May-06	<4
NC7-16	29-Jan-05	4.3
NC7-16	18-May-05	5.6
NC7-16	18-May-05	6.2
NC7-16	4-Aug-05	10.9
NC7-16	15-Nov-05	17.1
NC7-16	15-Nov-05	19.8
NC7-16	23-May-06	6.9
NC7-16	23-May-06	7.4
NC7-16	6-Sep-06	7.7
NC7-16	17-Oct-06	7.8
NC7-17	30-May-06	<4
NC7-17	1-Dec-06	<4
NC7-18	8-Jun-05	<4
NC7-18	1-Aug-05	<4
NC7-18	8-Dec-05	<4
NC7-18	21-Feb-06	<4
NC7-18	30-May-06	<4
NC7-18	18-Sep-06	<4
NC7-18	28-Nov-06	<4
NC7-19	11-May-04	<4

Table A-7. Ground and surface water analyses for perchlorate (mg/L) in samples collected from the Pit 7 Complex between July 1, 2003 and December 31, 2006.

Location	Sample Date	Perchlorate (ug/L)
NC7-19	11-May-04	<4
NC7-19	26-Apr-05	<4
NC7-19	26-Apr-05	<4
NC7-19	1-Jun-06	<4
NC7-20	30-Nov-04	<4
NC7-20	29-Jan-05	<4
NC7-20	29-Jan-05	<4
NC7-20	2-Jun-05	<4
NC7-20	1-Aug-05	<4 E
NC7-20	9-Nov-05	<4 E
NC7-20	14-Feb-06	4.3
NC7-20	14-Feb-06	<4
NC7-20	22-May-06	<4
NC7-20	5-Sep-06	<4
NC7-20	19-Oct-06	<4
NC7-21	29-Nov-04	9.6
NC7-21	29-Jan-05	8.3
NC7-21	2-Jun-05	9.1
NC7-21	1-Aug-05	13.7
NC7-21	30-Nov-05	16.9
NC7-21	14-Feb-06	9
NC7-21	18-May-06	10
NC7-21	5-Sep-06	8.9
NC7-21	18-Oct-06	9.4
NC7-25	31-Jul-03	16
NC7-25	5-Dec-03	17
NC7-25	4-Mar-04	16 H
NC7-25	29-Apr-04	15
NC7-25	22-Jul-04	15
NC7-25	29-Oct-04	18
NC7-25	25-Jan-05	15
NC7-25	6-Apr-05	15
NC7-25	12-Jul-05	14.5
NC7-25	26-Oct-05	16.3
NC7-25	5-Jan-06	15
NC7-25	24-Apr-06	14
NC7-25	10-Jul-06	14
NC7-25	4-Oct-06	14
NC7-26	12-Sep-03	<4
NC7-26	8-Dec-03	<4

Table A-7. Ground and surface water analyses for perchlorate (mg/L) in samples collected from the Pit 7 Complex between July 1, 2003 and December 31, 2006.

Location	Sample Date	Perchlorate (ug/L)
NC7-26	27-Jan-04	<4 H
NC7-26	29-Apr-04	<4
NC7-26	5-Aug-04	<4
NC7-26	2-Nov-04	<4
NC7-26	27-Jan-05	<4
NC7-26	6-Apr-05	<4
NC7-26	12-Jul-05	<4
NC7-26	20-Oct-05	<4 E
NC7-26	10-Jan-06	<4
NC7-26	27-Apr-06	<4
NC7-26	10-Jul-06	<4
NC7-26	2-Oct-06	<4
NC7-34	1-Jun-05	19
NC7-34	1-Jun-05	18
NC7-34	10-Feb-06	12
NC7-34	6-Jun-06	14
NC7-34	6-Jun-06	14
NC7-34	18-Sep-06	22
NC7-34	1-Dec-06	11
NC7-36	1-Jun-05	<4
NC7-36	24-Feb-06	<4
NC7-36	6-Jun-06	<4
NC7-36	18-Sep-06	<4
NC7-36	1-Dec-06	<4
NC7-37	4-Aug-05	10.5
NC7-37	10-Oct-05	11.3
NC7-37	5-Jun-06	5.3
NC7-37	19-Sep-06	7.8
NC7-37	28-Nov-06	<4
NC7-40	30-Nov-04	9.5
NC7-40	18-Feb-05	8.5
NC7-40	8-Aug-05	15.2
NC7-40	8-Aug-05	14 L
NC7-40	11-Oct-05	15.6
NC7-40	8-Feb-06	10
NC7-40	1-Jun-06	11
NC7-40	15-Aug-06	11
NC7-40	18-Oct-06	15
NC7-40	18-Oct-06	11
NC7-47	5-Aug-03	<4

Table A-7. Ground and surface water analyses for perchlorate (mg/L) in samples collected from the Pit 7 Complex between July 1, 2003 and December 31, 2006.

Location	Sample Date	Perchlorate (ug/L)
NC7-47	5-Dec-03	<4
NC7-47	8-Mar-04	<4
NC7-47	26-Apr-04	<4
NC7-47	29-Jul-04	<4
NC7-47	29-Jul-04	<4
NC7-47	28-Oct-04	<4
NC7-47	26-Jan-05	<4 E
NC7-47	26-Apr-05	<4 E
NC7-47	5-Jul-05	<4 E
NC7-47	5-Jul-05	<4 E
NC7-47	19-Oct-05	<4 E
NC7-47	19-Jan-06	<4 E
NC7-47	4-Apr-06	<4
NC7-47	6-Jul-06	<4
NC7-47	3-Oct-06	<4 E
NC7-48	5-Aug-03	<4
NC7-48	9-Dec-03	<4
NC7-48	9-Dec-03	<4
NC7-48	9-Mar-04	<4
NC7-48	28-Apr-04	<4
NC7-48	10-Aug-04	<4
NC7-48	2-Nov-04	<4
NC7-48	3-Feb-05	<4
NC7-48	6-Apr-05	<4
NC7-48	11-Jul-05	<4
NC7-48	20-Oct-05	<4
NC7-48	13-Jan-06	<4
NC7-48	25-Apr-06	<4
NC7-48	6-Jul-06	<4
NC7-48	2-Oct-06	<4
NC7-49A	1-Jun-05	<4
NC7-49A	11-May-06	<4
NC7-51	18-Feb-05	8.9
NC7-51	9-Jun-05	15.9
NC7-51	10-Aug-05	13.7
NC7-51	10-Oct-05	15.9
NC7-51	23-May-06	10
NC7-51	14-Sep-06	8
NC7-51	5-Dec-06	13
NC7-51	5-Dec-06	9.2

Table A-7. Ground and surface water analyses for perchlorate (mg/L) in samples collected from the Pit 7 Complex between July 1, 2003 and December 31, 2006.

Location	Sample Date	Perchlorate (ug/L)
NC7-52	1-Jun-05	<4
NC7-52	22-May-06	<4
NC7-53	8-Jun-05	<4
NC7-53	23-May-06	<4
NC7-60	19-May-04	<4
NC7-60	23-May-05	<4
NC7-60	1-Jun-06	<4
NC7-60	15-Nov-06	<4
NC7-63	8-Aug-05	9.43
NC7-63	10-Oct-05	11.8
NC7-63	1-Feb-06	6.6
NC7-63	23-May-06	<4
NC7-63	14-Sep-06	8.1
NC7-63	4-Dec-06	7.9
NC7-64	6-Dec-04	8
NC7-64	3-Mar-05	7.5
NC7-64	8-Aug-05	11
NC7-64	10-Oct-05	11.5
NC7-64	10-Feb-06	6
NC7-64	23-May-06	7.8
NC7-64	14-Sep-06	7.9
NC7-64	4-Dec-06	7.3
NC7-65	1-Nov-04	<4
NC7-65	7-Mar-05	<4
NC7-65	23-May-05	<4
NC7-65	8-Aug-05	<4
NC7-65	27-Oct-05	<4
NC7-65	24-Feb-06	<4
NC7-65	1-Jun-06	<4
NC7-65	6-Sep-06	4
NC7-65	30-Nov-06	<4
NC7-67	18-May-05	<4
NC7-67	24-May-06	<4
NC7-68	18-May-05	9.1
NC7-68	24-May-06	<4
NC7-75	20-May-05	<4
NC7-75	25-May-06	<4
NC7-76	18-May-06	<4
SPRING24	18-Oct-06	<4
W-865-01	5-May-04	<4

Table A-7. Ground and surface water analyses for perchlorate (mg/L) in samples collected from the Pit 7 Complex between July 1, 2003 and December 31, 2006.

Location	Sample Date	Perchlorate (ug/L)
W-865-01	8-Sep-04	<4
W-865-01	3-Nov-04	<4
W-865-01	29-Jan-05	<4
W-865-01	17-May-05	<4
W-865-01	24-Aug-05	<4
W-865-01	19-Oct-05	<4
W-865-01	16-Jan-06	<4
W-865-01	11-Apr-06	<4
W-865-01	30-Aug-06	<4
W-865-03	5-May-04	<4
W-865-03	8-Sep-04	<4
W-865-03	2-Nov-04	<4
W-865-03	29-Jan-05	<4
W-865-03	20-May-05	<4
W-865-03	24-Aug-05	<4
W-865-03	19-Oct-05	<4
W-865-03	16-Jan-06	<4
W-865-03	11-Apr-06	<4
W-865-03	19-Dec-06	<4
W-865-04	5-May-04	<4
W-865-04	5-May-04	<4
W-865-04	8-Sep-04	<4
W-865-04	18-Nov-04	<4
W-865-04	29-Jan-05	<4
W-865-04	13-May-05	<4
W-865-04	18-Aug-05	<4
W-865-04	6-Oct-05	<4 L
W-865-04	16-Jan-06	<4
W-865-04	5-Apr-06	<4
W-865-04	18-Oct-06	<4
W-865-07	5-May-04	<4
W-865-07	5-May-04	<4
W-865-07	9-Sep-04	<4
W-865-07	18-Nov-04	<4
W-865-07	29-Jan-05	<4
W-865-07	13-May-05	<4
W-865-07	18-Aug-05	<4
W-865-07	6-Oct-05	<4 L
W-865-07	16-Jan-06	<4
W-865-07	5-Apr-06	<4

Table A-7. Ground and surface water analyses for perchlorate (mg/L) in samples collected from the Pit 7 Complex between July 1, 2003 and December 31, 2006.

Location	Sample Date	Perchlorate (ug/L)
W-865-07	18-Oct-06	<4
W-865-1804	9-Jun-04	<4
W-865-1804	9-Sep-04	<4
W-865-1804	3-Nov-04	<4
W-865-1804	10-Mar-05	<4
W-865-1804	17-May-05	<4
W-865-1804	30-Aug-05	<4
W-865-1804	3-Nov-05	<4
W-865-1804	22-Feb-06	<4
W-865-1804	12-Apr-06	<4
W-865-1804	8-Dec-06	<4
W-PIT7-02	7-Jun-05	<4
W-PIT7-02	24-May-06	9.1
W-PIT7-03	10-Oct-05	12.2
W-PIT7-03	24-May-06	7.7
W-PIT7-03	5-Dec-06	12
W-PIT7-03	5-Dec-06	8.6
W-PIT7-10	1-Dec-04	<4
W-PIT7-10	7-Mar-05	<4
W-PIT7-10	13-May-05	<4
W-PIT7-10	4-Aug-05	<4
W-PIT7-10	8-Dec-05	<4
W-PIT7-10	16-Feb-06	<4
W-PIT7-10	22-May-06	<4
W-PIT7-10	13-Sep-06	<4
W-PIT7-10	28-Nov-06	<4
W-PIT7-11	27-Oct-05	4.36
W-PIT7-11	16-Feb-06	<4
W-PIT7-11	1-Dec-06	<4
W-PIT7-12	24-May-06	<4
W-PIT7-12	14-Nov-06	<4
W-PIT7-13	6-Sep-06	<4
W-PIT7-14	18-Dec-03	<4
W-PIT7-14	9-Mar-04	<4
W-PIT7-14	14-Jun-04	<4
W-PIT7-14	13-Sep-04	<4
W-PIT7-14	2-Nov-04	<4
W-PIT7-14	7-Mar-05	<4
W-PIT7-14	20-May-05	<4
W-PIT7-14	23-Aug-05	<4

Table A-7. Ground and surface water analyses for perchlorate (mg/L) in samples collected from the Pit 7 Complex between July 1, 2003 and December 31, 2006.

Location	Sample Date	Perchlorate (ug/L)
W-PIT7-14	24-Oct-05	<4
W-PIT7-14	16-Feb-06	<4
W-PIT7-14	24-May-06	<4
W-PIT7-14	20-Sep-06	<4
W-PIT7-14	14-Nov-06	<4
W-PIT7-15	10-Aug-06	<4
W-PIT7-1860	7-Mar-05	<4
W-PIT7-1860	15-Jun-05	<4
W-PIT7-1860	17-Aug-05	<4
W-PIT7-1860	31-Oct-05	<4
W-PIT7-1861	7-Mar-05	<4
W-PIT7-1861	15-Jun-05	<4
W-PIT7-1861	17-Aug-05	<4
W-PIT7-1861	31-Oct-05	<4
W-PIT7-2141	16-Nov-05	6.21
W-PIT7-2141	14-Nov-06	8

Notes:

μg/L = Micrograms per liter.
E = The analyte was detected below LLNL reporting limit, but above analytical laboratory minimum detection limit.
H = Sample analyzed outside of holding time, sample results should be evaluated.
L = Spike accuracy not within control limits.

Table A-8. Ground and surface water analyses for cations (mg/L) in samples collected from the Pit 7 Complex between July 1, 2003 and December 31, 2006.

Location	Sample Date	Sodium (mg/L)	Potassium (mg/L)	Calcium (mg/L)	Magnesium (mg/L)	Iron (mg/L)	Manganese (mg/L)	Copper (mg/L)	Zinc (mg/L)	Aluminum (mg/L)
K7-01	9-Sep-03		2.4							
K7-01	9-Sep-03							<0.01	<0.02	
K7-01	2-Dec-03		2.5							
K7-01	2-Dec-03							0.024	0.025	
K7-01	21-Jan-04		2.3							
K7-01	21-Jan-04							0.01	<0.02	
K7-01	21-Jan-04		2.4							
K7-01	21-Jan-04							<0.01	<0.02	
K7-01	28-Apr-04		2.4							
K7-01	28-Apr-04							<0.01	<0.02	
K7-01	4-Aug-04		2.4							
K7-01	4-Aug-04							<0.01	0.11	
K7-01	14-Sep-04								0.0086	
K7-01	21-Sep-04								0.0054	
K7-01	2-Nov-04							0.011 D	<0.1 DE	
K7-01	24-Jan-05							0.025	<0.02 E	
K7-01	24-Jan-05							0.023	<0.02 E	
K7-01	5-Apr-05							<0.01 E	<0.02 E	
K7-01	5-Apr-05	46 BFL	2.2	75 BFL	30	<0.1	<0.03		<0.05	<0.2
K7-01	11-Jul-05							0.00843	<0.01 E	
K7-01	24-Oct-05							0.193	0.011	
K7-01	20-Dec-05							<0.01 E		
K7-01	28-Dec-05							<0.01 E		
K7-01	3-Jan-06					<0.05	<0.001 E	<0.01 E	<0.02 E	
K7-01	3-Jan-06					<0.05	<0.001 E	<0.01 E	<0.02 E	
K7-01	13-Apr-06							<0.01 E	0.011 B	
K7-01	5-Jul-06							<0.01 E	<0.01 E	
K7-01	9-Oct-06							<0.01 BE	<0.01 E	
K7-03	17-Sep-03		3.3							
K7-03	17-Sep-03							0.023	0.043	
K7-03	9-Dec-03		3.4							
K7-03	9-Dec-03							0.018	0.026	
K7-03	21-Jan-04		3.3							
K7-03	21-Jan-04							0.012	0.1	
K7-03	20-Apr-04		3.3							
K7-03	20-Apr-04							<0.01	0.057	
K7-03	10-Aug-04		3.2							
K7-03	10-Aug-04							0.021	0.039	
K7-03	29-Oct-04							0.016	0.042	
K7-03	25-Jan-05							0.013	0.084	
K7-03	14-Apr-05	52 L	4.3 L	63 L	21	<0.1	<0.03		0.075	<0.2
K7-03	14-Apr-05	32 L	3.1 L	67 L	21	<0.1	<0.03		0.076	<0.2
K7-03	14-Apr-05					<0.1 E	<0.1 E	0.046	0.081	
K7-03	14-Apr-05					<0.1 E	<0.1 E	0.034	0.09	
K7-03	14-Apr-05								0.11	
K7-03	21-Apr-05								0.07 L	
K7-03	30-Jun-05								0.162	

Table A-8. Ground and surface water analyses for cations (mg/L) in samples collected from the Pit 7 Complex between July 1, 2003 and December 31, 2006.

Location	Sample Date	Sodium (mg/L)	Potassium (mg/L)	Calcium (mg/L)	Magnesium (mg/L)	Iron (mg/L)	Manganese (mg/L)	Copper (mg/L)	Zinc (mg/L)	Aluminum (mg/L)
K7-03	7-Jul-05								0.0776	
K7-03	12-Jul-05							0.0566	0.0721	
K7-03	27-Oct-05							0.031	0.0355 J	
K7-03	27-Oct-05							0.031	0.0355 J	
K7-03	27-Oct-05							0.0301	0.0299 J	
K7-03	5-Jan-06							0.019	0.073	
K7-03	23-Mar-06								0.058 B	
K7-03	30-Mar-06								0.07	
K7-03	24-Apr-06							0.023	0.03	
K7-03	24-Apr-06							0.023	0.032	
K7-03	6-Jul-06							0.027	0.021	
K7-03	4-Oct-06							0.059 B	0.03	
K7-06	5-Aug-03		1.9							
K7-06	5-Aug-03							0.0068	0.008 F	
K7-06	4-Dec-03		1.8							
K7-06	4-Dec-03							<0.01	<0.02	
K7-06	27-Jan-04		2							
K7-06	27-Jan-04							<0.01	<0.02	
K7-06	2-Jun-04		2							
K7-06	2-Jun-04							<0.01	<0.02	
K7-06	2-Jun-04		1.9							
K7-06	2-Jun-04							<0.01	<0.02	
K7-06	18-Aug-04		1.9							
K7-06	18-Aug-04							<0.01 E	<0.02 E	
K7-06	4-Nov-04							<0.01 E	<0.02 E	
K7-06	4-Nov-04							<0.01 E	<0.02 E	
K7-06	1-Feb-05							<0.01 E	<0.02 E	
K7-06	5-Apr-05							<0.01 E	<0.02 E	
K7-06	5-Apr-05	32 BFL	1.9	44 BFL	14	<0.1	<0.03		<0.05	<0.2
K7-06	3-Aug-05							0.00274	<0.01 E	
K7-06	31-Oct-05							<0.002 E	<0.01 E	
K7-06	13-Jan-06					<0.05		<0.01	<0.02 E	
K7-06	25-Apr-06							<0.01 E	<0.01 BE	
K7-06	5-Jul-06							<0.01	<0.01 E	
K7-06	2-Oct-06							<0.01 E	<0.01 E	
K7-09	9-Sep-03		19							
K7-09	9-Sep-03							<0.01	<0.02	
K7-09	9-Sep-03		19							
K7-09	9-Sep-03							<0.01	<0.02	
K7-09	3-Dec-03		9.2							
K7-09	3-Dec-03							<0.01	<0.02	
K7-09	26-Jan-04		8.9							
K7-09	26-Jan-04							<0.01	<0.02	
K7-09	3-May-04		25							
K7-09	3-May-04							<0.01	<0.02	
K7-09	17-Aug-04		24							
K7-09	17-Aug-04							<0.01 E	<0.02 EF	

Table A-8. Ground and surface water analyses for cations (mg/L) in samples collected from the Pit 7 Complex between July 1, 2003 and December 31, 2006.

Location	Sample Date	Sodium (mg/L)	Potassium (mg/L)	Calcium (mg/L)	Magnesium (mg/L)	Iron (mg/L)	Manganese (mg/L)	Copper (mg/L)	Zinc (mg/L)	Aluminum (mg/L)
K7-09	4-Nov-04							<0.01 E	<0.02 E	
K7-09	24-Feb-05							<0.01 E	<0.02 E	
K7-09	4-Apr-05	71	37	32	21	<0.1 E	<0.03 E	<0.05	<0.05	<0.2
K7-09	4-Apr-05							<0.01 E	<0.02 E	
K7-09	2-Aug-05							<0.002 F	<0.01	
K7-09	2-Aug-05	73.1				<0.1 E	0.00507			
K7-09	1-Nov-05							<0.002	<0.01	
K7-09	4-Jan-06							<0.01	<0.02 BE	
K7-09	2-May-06							<0.002 E	<0.005 EL	
K7-09	17-Jul-06							<0.01 E	<0.01 E	
K7-09	17-Jul-06							<0.01 E	<0.01 E	
K7-09	4-Oct-06							<0.01 BE	<0.01 E	
K7-10	31-Jul-03		4.9							
K7-10	31-Jul-03							<0.002	0.014	
K7-10	4-Dec-03		4.6							
K7-10	4-Dec-03							<0.01	0.023	
K7-10	27-Jan-04		5.1							
K7-10	27-Jan-04							<0.01	<0.02	
K7-10	3-May-04		11							
K7-10	3-May-04							<0.01	0.024	
K7-10	17-Aug-04		5.4							
K7-10	17-Aug-04							<0.01 E	<0.02 EF	
K7-10	23-Nov-04							<0.01 EO	<0.02 ELO	
K7-10	3-Feb-05							<0.01 E	<0.02 E	
K7-10	4-Apr-05	33	7.5	120	1.9	<0.1	<0.03	<0.05	<0.05 E	<0.2
K7-10	4-Apr-05								<0.05 E	
K7-10	4-Apr-05							<0.01 E	<0.02 BE	
K7-10	2-Aug-05							<0.002 F	<0.01	
K7-10	1-Nov-05							<0.002	<0.01	
K7-10	4-Jan-06							<0.01 E	<0.02 BE	
K7-10	2-May-06							<0.002 E	<0.005 EL	
K7-10	17-Jul-06							<0.01 E	<0.01 E	
K7-10	2-Oct-06							<0.01 E	<0.01 E	
K7-10	2-Oct-06							<0.01 E	<0.01 E	
MUL2	21-Aug-03		8.3							
MUL2	21-Aug-03							<0.01	<0.02	
MUL2	28-Jul-04		9.9							
MUL2	28-Jul-04							<0.01 O	<0.02	
MUL2	2-Aug-05		9.2							
MUL2	2-Aug-05							<0.01 E	<0.02 E	
MUL2	25-Jan-06		9.4							
MUL2	25-Jan-06							0.0033	<0.02	
MUL2	8-Aug-06		10							
MUL2	8-Aug-06							<0.01 E	<0.01	
NC7-15	26-Apr-05	36	1.7	45	17	<0.1	<0.03		<0.05	<0.2
NC7-15	26-Apr-05	36	2.5	43	16	<0.1	<0.03	<0.01	<0.02	0.08 J
NC7-16	18-May-05	44	1.8	53	25	<0.1	<0.03	<0.01	<0.02	

Table A-8. Ground and surface water analyses for cations (mg/L) in samples collected from the Pit 7 Complex between July 1, 2003 and December 31, 2006.

Location	Sample Date	Sodium (mg/L)	Potassium (mg/L)	Calcium (mg/L)	Magnesium (mg/L)	Iron (mg/L)	Manganese (mg/L)	Copper (mg/L)	Zinc (mg/L)	Aluminum (mg/L)
NC7-16	18-May-05	47	2.9	56	26	<0.1	<0.03	<0.01	<0.02	
NC7-19	26-Apr-05	42	2.5	51	19	<0.1	<0.03	<0.01	<0.02	0.09 J
NC7-19	26-Apr-05	41	2.3	49	19	<0.1	<0.03	<0.01	<0.02	0.07 J
NC7-20	2-Jun-05	43	3 L	67	22	<0.1	<0.03	<0.01	<0.02	0.06
NC7-21	2-Jun-05	57	3.2 L	89	39	<0.1	<0.03	<0.01	<0.02	0.08
NC7-25	31-Jul-03		2.6							
NC7-25	31-Jul-03							<0.002	0.0091	
NC7-25	5-Dec-03		2.5							
NC7-25	5-Dec-03							<0.01	<0.02	
NC7-25	4-Mar-04		2.1							
NC7-25	4-Mar-04							<0.01	<0.02	
NC7-25	29-Apr-04		2.5							
NC7-25	29-Apr-04							<0.01	<0.02	
NC7-25	22-Jul-04		2.2							
NC7-25	22-Jul-04							<0.01	<0.02	
NC7-25	29-Oct-04							<0.01 E	<0.02	
NC7-25	25-Jan-05							<0.01 E	<0.02 E	
NC7-25	6-Apr-05	86	2.3	84 L	39	<0.1	<0.03	<0.05	<0.05	<0.2
NC7-25	6-Apr-05					<0.1	<0.1 E	<0.01 E	<0.02 E	
NC7-25	12-Jul-05							0.00264	<0.01 E	
NC7-25	26-Oct-05							<0.002 E	<0.01	
NC7-25	5-Jan-06							<0.01	<0.02	
NC7-25	24-Apr-06							<0.002 E	<0.005 E	
NC7-25	10-Jul-06							<0.01 E	<0.01 O	
NC7-25	4-Oct-06							<0.01 BE	<0.01 E	
NC7-26	12-Sep-03		2.8							
NC7-26	12-Sep-03							<0.01	<0.02	
NC7-26	8-Dec-03		2.9							
NC7-26	8-Dec-03							<0.01	<0.02	
NC7-26	27-Jan-04		3.1							
NC7-26	27-Jan-04							<0.01	<0.02	
NC7-26	29-Apr-04		2.8							
NC7-26	29-Apr-04							<0.01	<0.02	
NC7-26	5-Aug-04		2.9							
NC7-26	5-Aug-04							<0.01	<0.02	
NC7-26	2-Nov-04							<0.01 D	<0.1 D	
NC7-26	27-Jan-05							<0.01 E	0.025	
NC7-26	6-Apr-05	38	3	69 L	23	<0.1	<0.03	<0.05	<0.05	<0.2
NC7-26	6-Apr-05					<0.1 E	<0.1 E	<0.01 E	<0.02 E	
NC7-26	12-Jul-05							<0.002 E	0.0199	
NC7-26	20-Oct-05							<0.002	<0.01	
NC7-26	10-Jan-06						0.041	<0.01	<0.02 E	
NC7-26	27-Apr-06							<0.002 E	<0.005 E	
NC7-26	10-Jul-06							<0.01 E	<0.01 O	
NC7-26	2-Oct-06							<0.01 E	<0.01 BE	
NC7-34	1-Jun-05	49 L	3	95	42	<0.1	<0.03	<0.01	<0.02	0.07
NC7-34	1-Jun-05	47 L	1.8	74	35	<0.1	<0.03	<0.01	<0.02	<0.05

Table A-8. Ground and surface water analyses for cations (mg/L) in samples collected from the Pit 7 Complex between July 1, 2003 and December 31, 2006.

Location	Sample Date	Sodium (mg/L)	Potassium (mg/L)	Calcium (mg/L)	Magnesium (mg/L)	Iron (mg/L)	Manganese (mg/L)	Copper (mg/L)	Zinc (mg/L)	Aluminum (mg/L)
NC7-36	1-Jun-05	36 L	2.3	52	25	<0.1	<0.03	<0.01	<0.02	0.07
NC7-40	4-Mar-04	59 HL	1.5 H	94 HL	45 HL	<0.05 H	<0.01 H	<0.01 H	<0.05 H	<0.05 H
NC7-47	5-Aug-03		3.5							
NC7-47	5-Aug-03							0.0021	0.011 F	
NC7-47	5-Dec-03		3.6							
NC7-47	5-Dec-03							<0.01	<0.02	
NC7-47	8-Mar-04		3.4							
NC7-47	8-Mar-04							<0.01	<0.02 L	
NC7-47	26-Apr-04		4							
NC7-47	26-Apr-04							<0.01	<0.02	
NC7-47	29-Jul-04		3.9							
NC7-47	29-Jul-04							<0.01	<0.02	
NC7-47	29-Jul-04		3.6							
NC7-47	29-Jul-04							<0.01	<0.02	
NC7-47	28-Oct-04							<0.01 E	<0.02	
NC7-47	26-Jan-05							<0.01 E	<0.02 E	
NC7-47	26-Apr-05	49	3.5	46	21	<0.1	<0.03		<0.05	<0.2
NC7-47	26-Apr-05					<0.1	<0.1 E	<0.01 E	<0.02 E	
NC7-47	5-Jul-05							<0.002 E	<0.01	
NC7-47	5-Jul-05							0.0026	<0.01 E	
NC7-47	19-Oct-05							<0.002 E	<0.01	
NC7-47	19-Jan-06							<0.01	<0.02 E	
NC7-47	4-Apr-06							<0.01 B	<0.01 BE	
NC7-47	6-Jul-06							<0.01 E	<0.01 E	
NC7-47	3-Oct-06							<0.01 E	<0.01 E	
NC7-48	5-Aug-03		1.6							
NC7-48	5-Aug-03							<0.002	0.0081 F	
NC7-48	9-Dec-03		1.7							
NC7-48	9-Dec-03							<0.01	<0.02	
NC7-48	9-Dec-03		1.7							
NC7-48	9-Dec-03							<0.01	<0.02	
NC7-48	9-Mar-04		1.6							
NC7-48	9-Mar-04							<0.01	<0.02 L	
NC7-48	28-Apr-04		1.4							
NC7-48	28-Apr-04							<0.01	<0.02	
NC7-48	10-Aug-04		1.5							
NC7-48	10-Aug-04							<0.01	<0.02	
NC7-48	2-Nov-04							<0.01 D	<0.1 DE	
NC7-48	3-Feb-05							<0.01 E	<0.02 E	
NC7-48	6-Apr-05	51	1.6	81 L	25	<0.1	<0.03	<0.05	<0.05	<0.2
NC7-48	6-Apr-05					<0.1	<0.1 E	<0.01	<0.02 E	
NC7-48	11-Jul-05							<0.002 E	<0.01	
NC7-48	20-Oct-05							<0.002 E	<0.01	
NC7-48	13-Jan-06					<0.05		<0.01	<0.02 E	
NC7-48	25-Apr-06							<0.01 E	<0.01 BE	
NC7-48	6-Jul-06							<0.01 E	<0.01 E	
NC7-48	2-Oct-06							<0.01 E	<0.01 BE	

Table A-8. Ground and surface water analyses for cations (mg/L) in samples collected from the Pit 7 Complex between July 1, 2003 and December 31, 2006.

Location	Sample Date	Sodium (mg/L)	Potassium (mg/L)	Calcium (mg/L)	Magnesium (mg/L)	Iron (mg/L)	Manganese (mg/L)	Copper (mg/L)	Zinc (mg/L)	Aluminum (mg/L)
NC7-49A	1-Jun-05	48 L	2.8	42	17	<0.1	<0.03	<0.01	<0.02	<0.05
NC7-50	19-May-05	290 D	24	440 D	230 D	<0.1	<0.03	<0.01	<0.02	
NC7-52	1-Jun-05	38 L	8.7	47	15	<0.1	<0.03	<0.01	<0.02	0.13
NC7-52A	1-Jun-05	42 L	4.8	51	14	<0.1	0.12	<0.01	<0.02	0.09
NC7-53	8-Jun-05	31 L	2.1	46	14	<0.1	<0.03	<0.01	<0.02	<0.05
NC7-60	23-May-05	58	14	29	10	<0.1	<0.03	<0.01	<0.02	
NC7-65	23-May-05	41	4.2	47	17	<0.1	<0.03	<0.01	<0.02	<0.05
NC7-67	18-May-05	50	19	31	11	<0.1	<0.03	<0.01	<0.02	
NC7-68	18-May-05	42	10	41	14	<0.1	<0.03	<0.01	<0.02	
NC7-75	20-May-05	43	5.1	38	15	<0.1	<0.03	<0.01	<0.02	
SPRING13	20-Dec-04	150 L	9.2	230 L	73 L	<0.05	<0.01 E	<0.01 E	<0.05 E	<0.05
SPRING24	1-Mar-04	41	5	40	19	<0.1	<0.03	<0.05	<0.05	<0.2
SPRING24	8-Jun-05	66 L	5.1	27	15	<0.1	<0.03	<0.01	<0.02	<0.05
W-865-01	6-Aug-03	36 H	18 H	42 H	11 H	<0.1 H	<0.03 H	<0.05 H	<0.05 H	<0.2 H
W-865-01	17-Nov-03	36	17 L	40	12 L	<0.1 L	<0.03	<0.05	<0.05	<0.2 L
W-865-01	3-Mar-04	36	29	43	12	1.6	<0.03	<0.05	<0.05	1.9
W-865-01	17-May-05	20	22 B	31	8.5	<0.1	<0.03	<0.01	<0.02	0.1 J
W-865-03	6-Aug-03	42 H	4 H	39 H	20 H	<0.1 H	<0.03 H	<0.05 H	<0.05 H	<0.2 H
W-865-03	17-Nov-03	40	4 L	36	20 L	<0.1 L	<0.03	<0.05	<0.05	<0.2 L
W-865-03	3-Mar-04	42	4	39	21	0.3	<0.03	<0.05	<0.05	0.3
W-865-03	20-May-05	39	3.7	38	20	<0.1	<0.03	<0.01	<0.02	
W-865-04	6-Aug-03	66 H	5 H	35 H	14 H	<0.1 H	<0.03 H	<0.05 H	<0.05 H	<0.2 H
W-865-04	17-Nov-03	64	6 L	33	14 L	<0.1 L	<0.03	<0.05	<0.05	<0.2 L
W-865-04	24-Feb-04	68	6	34	14	<0.1	<0.03	<0.05	<0.05	<0.2
W-865-07	6-Aug-03	60 H	3 H	40 H	18 H	<0.1 H	<0.03 H	<0.05 H	<0.05 H	<0.2 H
W-865-07	2-Dec-03	56	3	38	18	0.5 L	<0.03	<0.05	<0.05	0.3 L
W-865-07	24-Feb-04	63	4	39	19	<0.1	<0.03	<0.05	<0.05	<0.2
W-865-07	13-May-05	60	3.8 B	40	18	<0.1	<0.03	<0.01	<0.02	
W-865-1804	10-Mar-05	58	6.2 B	47	22	<0.1	<0.03	<0.01	<0.02	
W-865-1804	17-May-05	57	6 B	46	22	<0.1	0.31	<0.01	0.035	0.06 J
W-PIT7-02	7-Jun-05	27 L	4.2	41 L	13	<0.1	<0.03	<0.01	<0.02	0.07
W-PIT7-12	20-May-05	66	6.3	48	22	<0.1	<0.03	<0.01	<0.02	
W-PIT7-13	23-May-05	61	5.1	54	25	<0.1	<0.03	<0.01	0.023	<0.05
W-PIT7-14	18-Dec-03	37	5 L	42	<0.5	<0.1	<0.03	<0.05	<0.05	<0.2
W-PIT7-14	9-Mar-04	40	5	43	<0.5	<0.1	<0.03	<0.05	<0.05	<0.2
W-PIT7-14	20-May-05	36	4.3	41	<0.5	<0.1	<0.03	<0.01	<0.02	
W-PIT7-16	27-Apr-05	71	4.4	38	9.2	<0.1	<0.03		<0.05	<0.2
W-PIT7-1725	20-Aug-03	86 HL	49 HL	280 DH	<0.5 H	<0.1 H	<0.03 H	<0.05 H	<0.05 H	3.2 H
W-PIT7-1725	10-Mar-04	92 DL	46	8.3	<0.5	<0.1	<0.03	<0.05	<0.05	0.4
W-PIT7-1860	7-Mar-05	26	2.9	39	12	<0.1	<0.03	<0.01	<0.02	<0.05
W-PIT7-1860	15-Jun-05	27	2.9 L	38	12	<0.1	<0.03	<0.01	<0.02	0.06
W-PIT7-1860	31-Oct-05	20.2	1.74	35.8	11.6	<0.1	<0.002	<0.002 E	<0.01	<0.1
W-PIT7-1861	7-Mar-05	19	1.9	36	11	<0.1	<0.03	<0.01	<0.02	<0.05
W-PIT7-1861	15-Jun-05	19	2.1 L	35	11	<0.1	<0.03	<0.01	<0.02	0.07
W-PIT7-1861	31-Oct-05	18.3	1.61	34.8 L	11.3	<0.1	<0.002	<0.002 E	<0.01	<0.1
W-PIT7-1903	11-Jul-03	82 LH	4.3 H	100 LH	47 H	<0.05 H	<0.01 H	<0.01 H	<0.05 H	<0.05 H
W-PIT7-1903	8-Aug-03	83 HL	2.6 H	92 HL	43 HL	<0.05 H	<0.01 H	<0.01 H	<0.05 H	<0.05 H

Table A-8. Ground and surface water analyses for cations (mg/L) in samples collected from the Pit 7 Complex between July 1, 2003 and December 31, 2006.

Location	Sample Date	Sodium (mg/L)	Potassium (mg/L)	Calcium (mg/L)	Magnesium (mg/L)	Iron (mg/L)	Manganese (mg/L)	Copper (mg/L)	Zinc (mg/L)	Aluminum (mg/L)
W-PIT7-1903	5-Sep-03	74 HL	2.4 H	92 HL	44 HL	<0.05 H	<0.01 H	<0.01 H	<0.05 H	<0.05 H
W-PIT7-1903	10-Oct-03	69 L	2.2 L	98 L	44 L	0.063	<0.01	<0.01	<0.05	<0.05
W-PIT7-1903	7-Nov-03	70 L	2.4	94 L	46 L	<0.05	<0.01	<0.01	<0.05	<0.05
W-PIT7-1903	12-Dec-03	71 L	2.2	120 L	47 L	<0.05	<0.01	<0.01	0.085	0.058
W-PIT7-1903	9-Jan-04	67 LH	2.2 H	91 HL	45 L	<0.05 H	<0.01 H	<0.01 H	<0.05 H	<0.05 H
W-PIT7-1903	6-Feb-04	78 L	1.9	93 L	44 L	<0.05	<0.01	<0.01	0.056	<0.05
W-PIT7-1903	4-Mar-04	66 HL	1.8 H	94 HL	44 HL	<0.05 H	<0.01 H	<0.01 H	<0.05 H	<0.05 H
W-PIT7-1904	11-Jul-03	65 LH	3.8 H	98 LH	47 H	<0.05 H	<0.01 H	<0.01 H	<0.05 H	<0.05 H
W-PIT7-1904	8-Aug-03	63 HL	2.5 H	95 HL	45 HL	<0.05 H	<0.01 H	<0.01 H	<0.05 H	<0.05 H
W-PIT7-1904	5-Sep-03	60 HL	2.4 H	94 HL	45 HL	<0.05 H	<0.01 H	<0.01 H	<0.05 H	<0.05 H
W-PIT7-1904	10-Oct-03	62 L	2.2 L	100 L	46 L	<0.05	<0.01	<0.01	<0.05	<0.05
W-PIT7-1904	7-Nov-03	61 L	2.4	98 L	47 L	<0.05	<0.01	<0.01	<0.05	<0.05
W-PIT7-1904	12-Dec-03	60 L	2.1	120 L	48 L	<0.05	<0.01	<0.01	<0.05	<0.05
W-PIT7-1904	9-Jan-04	61 LH	2.1 H	96 HL	47 L	<0.05 H	<0.01 H	<0.01 H	<0.05 H	<0.05 H
W-PIT7-1904	6-Feb-04	60 L	2.1	96 L	46 L	<0.05	<0.01	<0.01	<0.05	<0.05
W-PIT7-1904	4-Mar-04	60 HL	2.3 H	95 HL	45 HL	<0.05 H	<0.01 H	<0.01 H	<0.05 H	<0.05 H
W-PIT7-1905	11-Jul-03	95 LH	2.8 H	87 LH	42 H	<0.05 H	<0.01 H	<0.01 H	<0.05 H	<0.05 H
W-PIT7-1905	8-Aug-03	89 HL	2 H	82 HL	40 HL	<0.05 H	0.016 H	<0.01 H	<0.05 H	<0.05 H
W-PIT7-1905	5-Sep-03	87 HL	2 H	86 HL	42 HL	<0.05 H	0.02 H	<0.01 H	<0.05 H	<0.05 H
W-PIT7-1905	10-Oct-03	89 L	1.9 L	92 L	42 L	<0.05	0.016	<0.01	<0.05	<0.05
W-PIT7-1905	7-Nov-03	91 L	2.1	83 L	42 L	<0.05	<0.01	<0.01	<0.05	<0.05
W-PIT7-1905	12-Dec-03	86 L	2	110 L	44 L	<0.05	<0.01	<0.01	<0.05	<0.05
W-PIT7-1905	9-Jan-04	89 LH	2.1 H	84 HL	43 L	<0.05 H	<0.01 H	<0.01 H	<0.05 H	<0.05 H
W-PIT7-1905	6-Feb-04	94 L	2	86 L	43 L	<0.05	<0.01	<0.01	<0.05	<0.05
W-PIT7-1905	4-Mar-04	95 HL	2 H	96 HL	46 HL	<0.05 H	<0.01 H	<0.01 H	<0.05 H	<0.05 H
W-PIT7-1907	11-Jul-03	600 LH	88 H	3.8 LH	29 H	<0.05 H	<0.01 H	<0.01 H	<0.05 H	<0.05 H
W-PIT7-1907	8-Aug-03	510 HL	72 H	3.7 HL	21 HL	<0.05 H	<0.01 H	<0.01 H	<0.05 H	<0.05 H
W-PIT7-1907	5-Sep-03	490 HL	65 H	4.7 HL	28 HL	<0.05 H	<0.01 H	<0.01 H	<0.05 H	<0.05 H
W-PIT7-1907	10-Oct-03	340 L	43 L	5.3 L	49 L	<0.05	<0.01	<0.01	<0.05	<0.05
W-PIT7-1907	7-Nov-03	300 L	37	5.9 L	57 L	<0.05	<0.01	<0.01	<0.05	<0.05
W-PIT7-1907	12-Dec-03	400 L	48	7 L	48 L	<0.05	<0.01	<0.01	<0.05	<0.05
W-PIT7-1907	9-Jan-04	360 LH	43 H	6 HL	50 L	<0.05 H	<0.01 H	<0.01 H	<0.05 H	<0.05 H
W-PIT7-1907	6-Feb-04	300 L	31	7.2 L	68 L	<0.05	<0.01	<0.01	<0.05	<0.05
W-PIT7-1907	4-Mar-04	250 HL	25 H	8.4 HL	83 HL	<0.05 H	<0.01 H	<0.01 H	<0.05 H	<0.05 H
W-PIT7-1915	11-Jul-03	540 LH	71 H	7.3 LH	85 H	<0.05 H	<0.01 H	<0.01 H	<0.05 H	<0.05 H
W-PIT7-1915	8-Aug-03	620 HL	71 H	4.5 HL	33 HL	0.056 H	<0.01 H	<0.01 H	<0.05 H	0.093 H
W-PIT7-1915	5-Sep-03	570 HL	65 H	4.4 HL	33 HL	<0.05 H	<0.01 H	<0.01 H	<0.05 H	<0.05 H
W-PIT7-1915	10-Oct-03	430 L	44 L	10 L	100 L	<0.05	<0.01	<0.01	<0.05	<0.05
W-PIT7-1915	7-Nov-03	420 L	44	9.3 L	91 L	<0.05	<0.01	<0.01	<0.05	<0.05
W-PIT7-1915	12-Dec-03	410 L	42	11 L	86 L	<0.05	<0.01	<0.01	<0.05	<0.05
W-PIT7-1915	9-Jan-04	390 LH	35 H	11 HL	100 L	<0.05 H	<0.01 H	<0.01 H	<0.05 H	<0.05 H
W-PIT7-1915	6-Feb-04	410 L	45	10 L	76 L	<0.05	<0.01	<0.01	<0.05	<0.05
W-PIT7-1915	4-Mar-04	420 HL	40 H	11 HL	86 HL	<0.05 H	<0.01 H	<0.01 H	<0.05 H	<0.05 H
W-PIT7-1916	11-Jul-03	70 LH	4.5 H	110 LH	52 H	<0.05 H	<0.01 H	<0.01 H	<0.05 H	<0.05 H
W-PIT7-1916	8-Aug-03	68 HL	4 H	110 HL	52 HL	<0.05 H	<0.01 H	<0.01 H	<0.05 H	<0.05 H
W-PIT7-1916	5-Sep-03	67 HL	3.9 H	110 HL	51 HL	<0.05 H	<0.01 H	<0.01 H	<0.05 H	<0.05 H
W-PIT7-1916	10-Oct-03	63	3.7	110	51	<0.05	<0.01	<0.01	<0.05	<0.05

Table A-8. Ground and surface water analyses for cations (mg/L) in samples collected from the Pit 7 Complex between July 1, 2003 and December 31, 2006.

Location	Sample Date	Sodium (mg/L)	Potassium (mg/L)	Calcium (mg/L)	Magnesium (mg/L)	Iron (mg/L)	Manganese (mg/L)	Copper (mg/L)	Zinc (mg/L)	Aluminum (mg/L)
W-PIT7-1916	7-Nov-03	61 L	4	100 L	52 L	<0.05	<0.01	<0.01	<0.05	<0.05
W-PIT7-1916	12-Dec-03	62 L	3.6	130 L	55 L	<0.05	<0.01	<0.01	<0.05	<0.05
W-PIT7-1916	9-Jan-04	62 LH	3.8 H	110 HL	52 L	<0.05 H	<0.01 H	<0.01 H	<0.05 H	<0.05 H
W-PIT7-1916	6-Feb-04	65 L	3.5	100 L	51 L	<0.05	<0.01	<0.01	<0.05	<0.05
W-PIT7-1916	4-Mar-04	63 HL	4 H	100 HL	51 HL	<0.05 H	<0.01 H	<0.01 H	<0.05 H	<0.05 H
W-PIT7-1917	11-Jul-03	73 LH	6.6 H	100 LH	51 H	<0.05 H	<0.01 H	<0.01 H	<0.05 H	<0.05 H
W-PIT7-1917	8-Aug-03	71 HL	4.9 H	110 HL	50 HL	<0.05 H	<0.01 H	<0.01 H	<0.05 H	<0.05 H
W-PIT7-1917	5-Sep-03	68 HL	4.4 H	100 HL	50 HL	<0.05 H	<0.01 H	<0.01 H	<0.05 H	<0.05 H
W-PIT7-1917	10-Oct-03	66 L	4.4 L	110 L	50 L	<0.05	<0.01	<0.01	<0.05	<0.05
W-PIT7-1917	7-Nov-03	64 L	4.7	100 L	51 L	<0.05	<0.01	<0.01	<0.05	<0.05
W-PIT7-1917	12-Dec-03	62 L	4.4	120 L	52 L	<0.05	<0.01	<0.01	<0.05	<0.05
W-PIT7-1917	9-Jan-04	65 LH	4.2 H	110 HL	51 L	<0.05 H	<0.01 H	<0.01 H	<0.05 H	<0.05 H
W-PIT7-1917	6-Feb-04	61 L	3.9	97 L	48 L	0.08	<0.01	<0.01	<0.05	<0.05
W-PIT7-1917	4-Mar-04	62 HL	4 H	100 HL	49 HL	<0.05 H	<0.01 H	<0.01 H	<0.05 H	<0.05 H
W-PIT7-1918	11-Jul-03	76 LH	4.7 H	110 LH	55 H	<0.05 H	<0.01 H	<0.01 H	<0.05 H	<0.05 H
W-PIT7-1918	8-Aug-03	69 HL	4 H	110 HL	51 HL	<0.05 H	<0.01 H	<0.01 H	<0.05 H	<0.05 H
W-PIT7-1918	5-Sep-03	68 HL	3.6 H	110 HL	51 HL	<0.05 H	<0.01 H	<0.01 H	<0.05 H	<0.05 H
W-PIT7-1918	10-Oct-03	68 L	3.6 L	110 L	51 L	<0.05	<0.01	<0.01	<0.05	<0.05
W-PIT7-1918	7-Nov-03	64 L	3.7	110 L	51 L	<0.05	<0.01	<0.01	<0.05	<0.05
W-PIT7-1918	12-Dec-03	66 L	3.4	130 L	52 L	<0.05	<0.01	<0.01	<0.05	<0.05
W-PIT7-1918	9-Jan-04	63 LH	3.3 H	100 HL	50 L	<0.05 H	<0.01 H	<0.01 H	<0.05 H	<0.05 H
W-PIT7-1918	6-Feb-04	63 L	2.9	110 L	50 L	<0.05	<0.01	<0.01	<0.05	<0.05
W-PIT7-1918	4-Mar-04	64 HL	3.2 H	100 HL	48 HL	<0.05 H	<0.01 H	<0.01 H	<0.05 H	<0.05 H
W-PIT7-1919	11-Jul-03	66 LH	4.7 H	100 LH	50 H	<0.05 H	<0.01 H	<0.01 H	<0.05 H	<0.05 H
W-PIT7-1919	8-Aug-03	61 HL	4.4 H	100 HL	50 HL	<0.05 H	<0.01 H	<0.01 H	<0.05 H	<0.05 H
W-PIT7-1919	5-Sep-03	60 HL	4 H	99 HL	47 HL	<0.05 H	<0.01 H	<0.01 H	<0.05 H	<0.05 H
W-PIT7-1919	10-Oct-03	61 L	3.9 L	110 L	47 L	<0.05	<0.01	<0.01	<0.05	<0.05
W-PIT7-1919	7-Nov-03	59 L	3.8	100 L	49 L	<0.05	<0.01	<0.01	<0.05	<0.05
W-PIT7-1919	12-Dec-03	60 L	3.5	120 L	50 L	<0.05	<0.01	<0.01	<0.05	<0.05
W-PIT7-1919	9-Jan-04	58 LH	3.7 H	97 HL	48 L	<0.05 H	<0.01 H	<0.01 H	<0.05 H	<0.05 H
W-PIT7-1919	6-Feb-04	57 L	3.1	100 L	48 L	<0.05	<0.01	<0.01	<0.05	<0.05
W-PIT7-1919	4-Mar-04	57 HL	3.1 H	99 HL	47 HL	<0.05 H	<0.01 H	<0.01 H	<0.05 H	<0.05 H
W-PIT7-2141	16-Nov-05	47.7	5.95	52.4	23.6	<0.1	0.00662	0.00371	<0.01	<0.1

Notes:

mg/L = Milligrams per liter.

B = Analyte found in method blank.

D = Analysis performed at a secondary dilution or concentration (i.e., vapor samples).

E = The analyte was detected below LLNL reporting limit, but above analytical laboratory minimum detection limit.

F = Analyte found in field blank, trip blank, or equipment blank.

H = Sample analyzed outside of holding time, sample results should be evaluated.

J = Analyte was postively identified; the associated numerical value is approximate concentration of the analyte.

L = Spike accuracy not within control limits.

O = Duplicate spike or sample precision not within control limits.

Table A-9. Ground and surface water analyses for metals ((mg/L)) in samples collected from the Pit 7 Complex between July 1, 2003 and December 31, 2006.

Location	Sample Date	Arsenic (mg/L)	Barium (mg/L)	Beryllium (mg/L)	Cadmium (mg/L)	Chromium (mg/L)	Lead (mg/L)	Mercury (mg/L)	Selenium (mg/L)	Silver (mg/L)
K7-01	9-Sep-03	0.011	0.21 L	<0.0005	<0.0005		<0.002			
K7-01	2-Dec-03	0.01	0.21	<0.0005	<0.0005		<0.002			
K7-01	21-Jan-04	0.011	0.22 L	<0.0005	<0.0005		<0.002			
K7-01	21-Jan-04	0.012	0.22 L	<0.0005	<0.0005		<0.002			
K7-01	28-Apr-04	0.011	0.22	<0.0005	<0.0005		<0.002			
K7-01	4-Aug-04	0.0098	0.18	<0.0005	<0.0005		<0.002			
K7-01	2-Nov-04	<0.01 DE	0.2 D	<0.0005	<0.004 DE		<0.01 DE			
K7-01	24-Jan-05	0.0097	0.19 L	<0.0005	<0.0005		<0.002 E			
K7-01	24-Jan-05	0.0094	0.2 L	<0.0005	<0.0005		<0.002 E			
K7-01	5-Apr-05	0.0076	0.2	<0.0005	<0.0005 BE		<0.002 E			
K7-01	11-Jul-05	0.00796	0.212	<0.0005	<0.0005		<0.002 E			
K7-01	24-Oct-05	0.00867	0.212	<0.0005	<0.0005		<0.002 E			
K7-01	3-Jan-06	0.0091	0.22	<0.0005	<0.0005	<0.004 DE	<0.002 EB	<0.0002	<0.002 E	<0.0005 EL
K7-01	3-Jan-06	0.009	0.22	<0.0005	<0.0005	<0.004 DE	<0.002 EB	<0.0002	<0.002 E	<0.0005 EL
K7-01	13-Apr-06	0.0084 B	0.19	<0.0005	<0.0005		<0.002 E			
K7-01	5-Jul-06	0.0088	0.19	<0.0005	<0.0005		<0.002 E			
K7-01	9-Oct-06	0.011 B	0.19	<0.0005 B	<0.0005 E		<0.002 E			
K7-03	17-Sep-03	<0.002	0.086	<0.0005 D	<0.0005		<0.002			
K7-03	9-Dec-03	0.0029	0.085	<0.0005	<0.0005		<0.002			
K7-03	21-Jan-04	0.0026	0.092 L	<0.0005	<0.0005		<0.002			
K7-03	20-Apr-04	<0.002	0.088	<0.0005	<0.0005		<0.002			
K7-03	10-Aug-04	<0.002	0.088 L	<0.0005	<0.0005		<0.002			
K7-03	29-Oct-04	<0.002 E	0.077	<0.0005	<0.0005 E		<0.002 E			
K7-03	25-Jan-05	<0.002 E	0.078	<0.0005	<0.0005 E		<0.002 E			
K7-03	14-Apr-05	<0.002 E	0.069	<0.0005	<0.0005 E	0.0054	<0.002 E	<0.0002	<0.002 E	<0.0005
K7-03	14-Apr-05	<0.002	0.069	<0.0005	<0.0005 E	0.0052	<0.002 E	<0.0002	<0.002	<0.0005
K7-03	12-Jul-05	<0.002 E	0.0862	<0.0005	<0.0005		<0.002 E			
K7-03	27-Oct-05	<0.002 E	0.0891	<0.0005	<0.0005		<0.002			
K7-03	27-Oct-05	<0.002 E	0.0891	<0.0005	<0.0005	<0.001	<0.002		<0.002 E	<0.0005
K7-03	27-Oct-05	<0.002 E	0.0907	<0.0005	<0.0005		<0.002			
K7-03	5-Jan-06	<0.002	0.085	<0.0005	<0.0005		<0.002 E	<0.0002		
K7-03	24-Apr-06	<0.002 BE	0.063	<0.0005	<0.001 E		<0.001 E			
K7-03	24-Apr-06	<0.002 B	0.063	<0.0005	<0.001 E		<0.001 E			
K7-03	6-Jul-06	<0.002 E	0.077	<0.0005	<0.0005		<0.002			
K7-03	4-Oct-06	<0.002 BE	0.081	<0.0005	<0.0005 E		<0.002 E			
K7-06	5-Aug-03	0.021	0.088	<0.0002	<0.0005		<0.001			
K7-06	4-Dec-03	0.02	0.087 L	<0.0005	<0.0005		<0.002			
K7-06	27-Jan-04	0.018	0.089	<0.0005	<0.0005		<0.002			
K7-06	2-Jun-04	0.02	0.091 L	<0.0005	<0.0005		<0.002			
K7-06	2-Jun-04	0.021	0.091 L	<0.0005	<0.0005		<0.002			
K7-06	18-Aug-04	0.021	0.086	<0.0005	<0.0005 E		<0.002 E			
K7-06	4-Nov-04	0.017	0.081	<0.0005	<0.0005 E		<0.002			
K7-06	4-Nov-04	0.017	0.081	<0.0005	<0.0005 E		<0.002			
K7-06	1-Feb-05	0.02	0.085	<0.0005 L	<0.0005 E		<0.002			

Table A-9. Ground and surface water analyses for metals ((mg/L)) in samples collected from the Pit 7 Complex between July 1, 2003 and December 31, 2006.

Location	Sample Date	Arsenic (mg/L)	Barium (mg/L)	Beryllium (mg/L)	Cadmium (mg/L)	Chromium (mg/L)	Lead (mg/L)	Mercury (mg/L)	Selenium (mg/L)	Silver (mg/L)
K7-06	5-Apr-05	0.018	0.081	<0.0005	0.0011 B		<0.002			
K7-06	3-Aug-05	0.0178	0.0824	<0.0005	0.00116		<0.002			
K7-06	31-Oct-05	0.0181	0.0927	<0.0005	0.00091		<0.002			
K7-06	13-Jan-06	0.0058 B	0.12	<0.0005	<0.0005		<0.002			
K7-06	25-Apr-06	0.018	0.089	<0.0005 BE	0.0017		<0.002			
K7-06	5-Jul-06	0.018	0.085	<0.0005	0.00098		<0.002 E			
K7-06	2-Oct-06	0.021	0.085	<0.0005	0.0019		<0.002 E			
K7-09	9-Sep-03	<0.002	<0.025 L	<0.0005	<0.0005		<0.002			
K7-09	9-Sep-03	<0.002	<0.025 L	<0.0005	<0.0005		<0.002			
K7-09	3-Dec-03	<0.002	0.025	<0.0005	<0.0005		<0.002			
K7-09	26-Jan-04	0.0023	0.033 L	<0.0005	<0.0005		<0.002			
K7-09	3-Mar-04	<0.001								
K7-09	10-Mar-04	<0.001								
K7-09	3-May-04	<0.002	0.025	<0.0005	<0.0005		<0.002			
K7-09	17-Aug-04	<0.002	0.025	<0.0005	<0.0005 F		<0.002 EF			
K7-09	4-Nov-04	<0.002	0.026	<0.0005	<0.0005		<0.002 E			
K7-09	24-Feb-05	<0.002	<0.025 E	<0.0005	<0.0005		<0.002			
K7-09	4-Apr-05	<0.002	<0.025 BE	<0.0005 E	<0.0005		<0.002 B			
K7-09	2-Aug-05	<0.002 E	0.0126	<0.0005	<0.0005		<0.002			
K7-09	2-Aug-05					<0.001			<0.002	<0.0005
K7-09	1-Nov-05	<0.002 E	0.0221	<0.0005	<0.0005		<0.002			
K7-09	4-Jan-06	<0.002 E	0.033	<0.0005	<0.0005		<0.002 B	<0.0002		<0.0005 LE
K7-09	2-May-06	<0.002 BE	0.018	<0.0005 L	<0.001		<0.001			
K7-09	17-Jul-06	<0.002	<0.025 E	<0.0005	<0.0005		<0.002 E			
K7-09	17-Jul-06	<0.002	<0.025 E	<0.0005	<0.0005		<0.002			
K7-09	4-Oct-06	<0.002 BE	0.027	<0.0005	<0.0005		<0.002			
K7-10	31-Jul-03	0.0076	0.046 L	<0.0002	<0.0005		<0.001			
K7-10	22-Sep-03	0.0038								
K7-10	29-Sep-03	<1								
K7-10	4-Dec-03	0.0022	0.044 L	<0.0005	<0.0005		<0.002			
K7-10	27-Jan-04	0.0024	0.048	<0.0005	<0.0005		<0.002			
K7-10	3-May-04	0.0024	0.12	<0.0005	<0.0005		<0.002			
K7-10	17-Aug-04	0.0021	0.048	<0.0005	<0.0005 EF		<0.002 EF			
K7-10	23-Nov-04	<0.002 LO	0.041 LO	<0.0005	<0.0005 E		<0.002 ELO			
K7-10	3-Feb-05	<0.002	0.09 L	<0.0005 L	<0.0005 E		<0.002 E			
K7-10	4-Apr-05	<0.002	0.25	<0.0005 E	<0.0005 E		<0.002			
K7-10	7-Jun-05		0.18							
K7-10	14-Jun-05		0.18							
K7-10	2-Aug-05	<0.002	0.183	<0.0005	<0.0005		<0.002			
K7-10	1-Nov-05	<0.002 E	0.115	<0.0005	<0.0005		<0.002			
K7-10	4-Jan-06	0.002	0.098	<0.0005	<0.0005		<0.002 B	<0.0002		<0.0005 LE
K7-10	2-May-06	<0.002 B	0.23	<0.0005 L	<0.001 E		<0.001			
K7-10	17-Jul-06	<0.002	0.14	<0.0005	<0.0005 E		<0.002			
K7-10	2-Oct-06	<0.002 E	0.052	<0.0005	<0.0005		<0.002 E			

Table A-9. Ground and surface water analyses for metals ((mg/L)) in samples collected from the Pit 7 Complex between July 1, 2003 and December 31, 2006.

Location	Sample Date	Arsenic (mg/L)	Barium (mg/L)	Beryllium (mg/L)	Cadmium (mg/L)	Chromium (mg/L)	Lead (mg/L)	Mercury (mg/L)	Selenium (mg/L)	Silver (mg/L)
K7-10	2-Oct-06	<0.002 E	0.095	<0.0005	<0.0005		<0.002 E			
MUL2	21-Aug-03	<0.002	<0.025	<0.0005	<0.0005	<0.001	<0.002	<0.0002	0.006	<0.0005
MUL2	28-Jul-04	<0.002	<0.025	<0.0005	<0.0005	<0.001	<0.002	<0.0002	0.0023	<0.0005
MUL2	2-Aug-05	<0.002	<0.025 BE	<0.0005	<0.0005	<0.001	<0.002 E	<0.0002	0.003	<0.0005
MUL2	25-Jan-06	<0.002 E	<0.025 E	<0.0005	<0.0002	0.0013 B	<0.001	<0.0002	0.0046	<0.001
MUL2	8-Aug-06	<0.002	0.011	<0.0005	<0.0002	<0.001	<0.002	<0.0002	0.0035	<0.0005
NC7-12	31-Aug-04	0.008	0.076		0.0014	0.002	<0.005	<0.0002 L	<0.005	<0.001
NC7-12	4-Aug-05	0.00843	0.0715		0.00082	<0.001 E	<0.002	<0.0002	<0.002 E	<0.001
NC7-12	16-Aug-06	0.0086	0.08 BL		0.0006	0.001	<0.0002	<0.0002	0.004	<0.0001
NC7-16	3-Mar-04	0.012	0.14		0.0087	0.033	<0.005	<0.0002	<0.005	<0.001
NC7-17	8-Dec-04	<0.002	0.15 D		<0.0005	<0.001	<0.005	<0.0002	<0.002	<0.001
NC7-17	31-Oct-05	0.00716	0.109		<0.0005	<0.001 E	<0.002	<0.0002	<0.002 E	<0.001
NC7-17	1-Dec-06	0.0061	0.1		<0.0005	0.001 L	<0.005	<0.0002	<0.002	<0.001
NC7-18	16-Dec-03	0.008	0.1		0.001	0.002	<0.005	<0.0002	<0.005	<0.001
NC7-18	29-Nov-04		0.11 D		<0.0005	<0.001	<0.005	<0.0002	<0.002	<0.001
NC7-18	8-Dec-05	0.00635	0.106 B		<0.0005	0.00577	<0.002	<0.0002	<0.002 E	<0.001
NC7-18	28-Nov-06	0.0061	0.1		<0.0005	0.005	<0.005	<0.0002	<0.002	<0.001
NC7-25	31-Jul-03	0.007	0.084 L	<0.0002	<0.0005		<0.001			
NC7-25	5-Dec-03	0.0059	0.079	<0.0005	<0.0005		<0.002			
NC7-25	4-Mar-04	0.0056	0.086	<0.0005	<0.0005		<0.002			
NC7-25	29-Apr-04	0.0049	0.079	<0.0005	<0.0005		<0.002			
NC7-25	22-Jul-04	0.0048	0.082	<0.0005	<0.0005		<0.002			
NC7-25	29-Oct-04	0.0053	0.072	<0.0005	<0.0005		<0.002			
NC7-25	25-Jan-05	0.006	0.072	<0.0005	<0.0005		<0.002 E			
NC7-25	6-Apr-05	0.0063 L	0.076	<0.0005	<0.0005	<0.001 E	<0.002	<0.0002	0.0039 L	<0.0005
NC7-25	12-Jul-05	0.00549	0.0854	<0.0005	<0.0005		<0.002			
NC7-25	26-Oct-05	0.00489	0.0817	<0.0005	<0.0005		<0.002			
NC7-25	5-Jan-06	0.004	0.08	<0.0005	<0.0005		<0.002	<0.0002		
NC7-25	24-Apr-06	0.0049 B	0.073	<0.0005	<0.001		<0.001 E			
NC7-25	10-Jul-06	0.0063	0.076	<0.0005	<0.0005		<0.002 B			
NC7-25	4-Oct-06	0.0062 B	0.075	<0.0005	<0.0005		<0.002			
NC7-26	12-Sep-03	0.0024	0.026 LO	<0.0005	<0.0005		<0.002			
NC7-26	8-Dec-03	0.0025	0.027	<0.0005	<0.0005		<0.002			
NC7-26	27-Jan-04	0.0026	0.027	<0.0005	<0.0005		<0.002			
NC7-26	29-Apr-04	<0.002	0.027	<0.0005	<0.0005		<0.002			
NC7-26	5-Aug-04	0.0021	0.027	<0.0005	<0.0005		<0.002			
NC7-26	2-Nov-04	<0.01 DL	<0.025 DE	<0.0005	<0.004 D		<0.01 D			
NC7-26	27-Jan-05	<0.002 E	0.031	<0.0005 L	<0.0005 E		<0.002 E			
NC7-26	6-Apr-05	<0.002 EL	0.027	<0.0005	<0.0005	<0.001 E	<0.002 E	<0.0002	<0.002 L	<0.0005
NC7-26	12-Jul-05	0.00278	0.0296	<0.0005	<0.0005		<0.002			
NC7-26	20-Oct-05	0.00443	0.0625	<0.0005	<0.0005		<0.002			
NC7-26	10-Jan-06	<0.002 E	0.027	<0.0005	<0.0005		<0.002	<0.0002 E	<0.002	<0.0005 E
NC7-26	10-Jan-06	<0.05								
NC7-26	17-Jan-06	<0.05								

Table A-9. Ground and surface water analyses for metals ((mg/L)) in samples collected from the Pit 7 Complex between July 1, 2003 and December 31, 2006.

Location	Sample Date	Arsenic (mg/L)	Barium (mg/L)	Beryllium (mg/L)	Cadmium (mg/L)	Chromium (mg/L)	Lead (mg/L)	Mercury (mg/L)	Selenium (mg/L)	Silver (mg/L)
NC7-26	19-Jan-06	<0.05								
NC7-26	14-Feb-06	<0.002 E								
NC7-26	17-Feb-06	<0.002 E								
NC7-26	27-Apr-06	<0.002 E	0.028	<0.0005	<0.001		<0.001 E			
NC7-26	10-Jul-06	0.0021	0.026	<0.0005	<0.0005		<0.002 B			
NC7-26	2-Oct-06	<0.002 E	0.027	<0.0005	<0.0005		<0.002 E			
NC7-34	4-Dec-03	0.012	0.14		0.0005	0.005	<0.005	<0.0002	<0.005	<0.001
NC7-40	31-Jul-03	0.01	0.29		<0.0005	0.006	<0.005	<0.0002	<0.005	<0.001
NC7-40	31-Oct-03	0.01	0.29		<0.0005	0.006	<0.005	<0.0002	<0.005	<0.001
NC7-40	24-Feb-04	0.008	0.32		<0.0005	0.005	<0.005	<0.0002	<0.005	<0.001
NC7-47	5-Aug-03	0.013	0.063	<0.0002	<0.0005		<0.001			
NC7-47	5-Dec-03	0.012	0.061 L	<0.0005	<0.0005		<0.002			
NC7-47	8-Mar-04	0.014	0.062	<0.0005	<0.0005		<0.002			
NC7-47	26-Apr-04	0.013	0.062	<0.0005	<0.0005		<0.002			
NC7-47	29-Jul-04	0.012	0.065	<0.0005	<0.0005		<0.002			
NC7-47	29-Jul-04	0.011	0.056	<0.0005	<0.0005		<0.002			
NC7-47	28-Oct-04	0.011	0.054	<0.0005	<0.0005		<0.002			
NC7-47	26-Jan-05	0.012	0.055	<0.0005	<0.0005		<0.002			
NC7-47	26-Apr-05	0.011	0.061	<0.0005	<0.0005	<0.001 E	<0.002	<0.0002	<0.002 E	<0.0005
NC7-47	5-Jul-05	0.0117	0.0611	<0.0005	<0.0005		<0.002			
NC7-47	5-Jul-05	0.0114	0.061	<0.0005	<0.0005		<0.002			
NC7-47	19-Oct-05	0.0115	0.0638	<0.0005	<0.0005		<0.002			
NC7-47	19-Jan-06	0.012	0.062	<0.0005	<0.0005		<0.002			
NC7-47	4-Apr-06	0.013	0.06 B	<0.0005 L	<0.0005		<0.002			
NC7-47	6-Jul-06	0.014	0.059	<0.0005	<0.0005		<0.002			
NC7-47	3-Oct-06	0.013	0.059	<0.0005	<0.0005		<0.002			
NC7-48	5-Aug-03	0.008	0.14	<0.0002	<0.0005		<0.001			
NC7-48	9-Dec-03	0.0097	0.16	<0.0005	<0.0005		<0.002			
NC7-48	9-Dec-03	0.0097	0.15	<0.0005	<0.0005		<0.002			
NC7-48	9-Mar-04	0.0086	0.13	<0.0005	<0.0005		<0.002			
NC7-48	28-Apr-04	0.0084	0.13	<0.0005	<0.0005		<0.002			
NC7-48	10-Aug-04	0.006	0.14 L	<0.0005	<0.0005		<0.002			
NC7-48	2-Nov-04	<0.01 DL	0.13 D	<0.0005	<0.004 D		<0.01 D			
NC7-48	3-Feb-05	0.004	0.12 L	<0.0005 L	<0.0005		<0.002 E			
NC7-48	6-Apr-05	0.0064 L	0.14	<0.0005	<0.0005 E	<0.001 E	<0.002	<0.0002	<0.002 LE	<0.0005
NC7-48	11-Jul-05	0.00602	0.129	<0.0005	<0.0005		<0.002			
NC7-48	20-Oct-05	0.00611	0.136	<0.0005	<0.0005		<0.002			
NC7-48	13-Jan-06	0.021 B	0.083	<0.0005	0.0018		<0.002			
NC7-48	23-Mar-06	0.0055			<0.0005					
NC7-48	30-Mar-06	0.0065			<0.001					
NC7-48	25-Apr-06	0.0044	0.12	<0.0005 BE	<0.0005		<0.002			
NC7-48	6-Jul-06	0.0076	0.12	<0.0005	<0.0005		<0.002			
NC7-48	2-Oct-06	0.0056	0.12	<0.0005	<0.0005 E		<0.002 E			
NC7-49A	31-Oct-03	0.014	0.1		<0.0005	0.001	<0.005	<0.0002	<0.005	<0.001

Table A-9. Ground and surface water analyses for metals ((mg/L)) in samples collected from the Pit 7 Complex between July 1, 2003 and December 31, 2006.

Location	Sample Date	Arsenic (mg/L)	Barium (mg/L)	Beryllium (mg/L)	Cadmium (mg/L)	Chromium (mg/L)	Lead (mg/L)	Mercury (mg/L)	Selenium (mg/L)	Silver (mg/L)
NC7-49A	6-Dec-04	0.011 J	0.093			<0.001	<0.002	<0.005	<5	<1
NC7-49A	15-Nov-05	0.013	0.0995		<0.0005	<0.001	<0.002	<0.0002	<0.002 E	<0.001
NC7-49A	13-Nov-06	0.012	0.1		<0.0001	<0.0005	<0.0002	<0.0002	<0.002	<0.0001
NC7-50	11-Nov-03	0.004	<0.025		0.0028	<0.001	<0.005	<0.0002	0.049	<0.001
NC7-50	29-Nov-04		<0.02		<0.0005	<0.001	<0.005	<0.0002	<0.002	<0.001
NC7-50	19-Oct-05	<0.002 E	0.0129		<0.0005 E	<0.001	<0.002	<0.0002	0.0596	<0.001
NC7-50	18-Oct-06	0.0044	<0.02		0.0008	<0.001 L	<0.005	<0.0002	0.06	<0.001
NC7-51	16-Oct-03	0.008	0.28		<0.0005	0.004	<0.005	<0.0002	<0.005	<0.001
NC7-51	10-Oct-05	0.00757	0.212		<0.0005	<0.001	<0.002	<0.0002	<0.002 E	<0.001
NC7-51	5-Dec-06	<0.05	0.23		<0.001	<0.001 L	<0.005	<0.0002	<0.05	<0.001
NC7-51	5-Dec-06	0.0073	0.2 D		<0.0005	0.002	<0.005	<0.0002	<0.002	<0.001
NC7-52	11-Nov-03	0.004	0.035		<0.0005	<0.001	<0.005	<0.0002	<0.005	<0.001
NC7-52	19-Nov-04	<0.002	0.04 L		<0.0005	<0.001	<0.005	<0.0002	<0.002	<0.001
NC7-52	11-Oct-05	0.00437	0.0396		0.00075	<0.001	<0.002		<0.002 E	<0.001
NC7-52	18-Oct-06	0.0033	0.04		0.002	0.001	<0.005	<0.0002	<0.002	<0.001
NC7-53	11-Nov-03	0.008	0.065		<0.0005	<0.001	<0.005	<0.0002	<0.005	<0.001
NC7-53	19-Nov-04	<0.002	0.05		<0.0005	<0.001	<0.005	<0.0002	<0.002	<0.001
NC7-53	31-Oct-05	0.00801	0.0735		<0.0005	<0.001	<0.002	<0.0002	<0.002 E	<0.001
NC7-53	6-Dec-06	0.0072	0.07		<0.0005	0.001	<0.005	<0.0002	<0.002	<0.001
NC7-60	19-May-04	0.015	0.031		<0.0005	<0.001	<0.005	<0.0002	<0.005	<0.001
NC7-60	23-May-05	0.012	0.03		0.0009	<0.001	<0.005	<0.0002	<0.002	<0.001
NC7-64	11-Nov-03	0.01	0.13		<0.0005	<0.001	<0.005	<0.0002	<0.005	<0.001
NC7-65	3-Dec-03	0.008	0.039		<0.0005	<0.001	<0.005	<0.0002	<0.005	<0.001
NC7-65	1-Nov-04	0.01	0.041		<500	<0.001	<0.002	<0.005	<5	<1
NC7-65	27-Oct-05	0.0115	0.0412		<0.0005	<0.001	<0.002	<0.0002	<0.002	<0.001
NC7-65	30-Nov-06	0.012	0.04		<0.0005	<0.001	<0.005	<0.0002	<0.002	<0.001
NC7-67	13-Nov-03	0.002	0.044		<0.0005	<0.001	<0.005	<0.0002	<0.005	<0.001
NC7-67	19-Nov-04	<0.002	0.04 L		<0.0005	<0.001	<0.005	<0.0002	<0.002	<0.001
NC7-67	11-Oct-05	0.00308	0.0429		<0.0005	0.00103	<0.002		<0.002	<0.001
NC7-67	30-Nov-06	0.0028	0.05		<0.0005	0.002	<0.005	<0.0002	<0.002	<0.001
NC7-75	3-Dec-03	0.015	0.062		<0.0005	<0.001	0.007	<0.0002	<0.005	<0.001
SPRING13	20-Dec-04	<0.002	<0.025 E	<0.0002 E	<0.0005	0.013 D	<0.005 E	<0.0002	0.0036	<0.001
SPRING13	7-Dec-05	<0.002	0.0108 B		<0.0005	<0.001	<0.002	<0.0002	0.00325	<0.001
SPRING13	7-Dec-05			<0.002						
W-865-01	30-Aug-06	0.0039	0.05		<0.0005	0.002	<0.005	<0.0002	<0.002	<0.001
W-865-1804	18-Dec-03	0.017	0.028		<0.0005	<0.001	<0.005	<0.0002	<0.005	<0.001
W-865-1804	4-Mar-04	0.015	0.03		<0.0005	<0.001	<0.005	<0.0002 L	<0.005	<0.001
W-865-1804	9-Jun-04	0.014	0.032		<0.0005	<0.001	<0.005	<0.0002	<0.005 L	<0.001
W-865-1804	9-Sep-04	0.012	0.031		<0.0005	<0.001	<0.005	<0.0002	<0.005	<0.001
W-865-1804	3-Nov-04	0.011	0.03		<0.0005	<0.001	<0.005	<0.0002	<0.002	<0.001
W-865-1804	10-Mar-05	0.011	0.03		<0.0005	<0.001	<0.005	<0.0002	<0.002	<0.001
W-865-1804	17-May-05	0.013	0.04		<0.0005	<0.001	<0.005	<0.0002	<0.002	<0.001
W-865-1804	30-Aug-05	0.00977	0.0275		<0.0005	<0.001	<0.002	<0.0002	<0.002 E	<0.001
W-865-1804	3-Nov-05	0.0126	0.0337		<0.0005	<0.001	<0.002	<0.0002	<0.002 E	<0.001

Table A-9. Ground and surface water analyses for metals ((mg/L)) in samples collected from the Pit 7 Complex between July 1, 2003 and December 31, 2006.

Location	Sample Date	Arsenic (mg/L)	Barium (mg/L)	Beryllium (mg/L)	Cadmium (mg/L)	Chromium (mg/L)	Lead (mg/L)	Mercury (mg/L)	Selenium (mg/L)	Silver (mg/L)
W-865-1804	22-Feb-06	0.0099	0.03 L		<0.0005	<0.001	<0.005	<0.0002 L	<0.002	<0.001
W-865-1804	12-Apr-06	0.012	0.03 JL		<0.0005	0.001	<0.005	<0.0002	0.003	<0.001
W-PIT7-02	24-Nov-03	0.007	0.067		<0.0005	<0.001	<0.005	<0.0002 LO	<0.005	<0.001
W-PIT7-03	25-Nov-03	0.017	0.2		<0.0005	<0.001	<0.005	<0.0002 LO	<0.005	<0.001
W-PIT7-10	4-Dec-03	0.014	0.068		<0.0005	<0.001	<0.005	<0.0002	<0.005	<0.001
W-PIT7-14	18-Dec-03	0.002	0.24		<0.0005	0.003	<0.005	<0.0002	<0.005	<0.001
W-PIT7-14	9-Mar-04	0.002	0.26		<0.0005	0.003	<0.005	<0.0002 L	<0.005	<0.001
W-PIT7-1860	7-Mar-05	0.007	0.05		<0.0005	<0.001	<0.005	<0.0002	<0.002	<0.001
W-PIT7-1860	15-Jun-05	0.0094	0.05		<0.0005	<0.001	<0.005	<0.0002	<0.002	<0.001
W-PIT7-1860	17-Aug-05	0.0115	0.04		<0.0005	<0.001	<0.002	<0.0002	<0.002	<0.001
W-PIT7-1860	31-Oct-05	0.0124	0.0363		<0.0005	<0.001	<0.002	<0.0002	<0.002	<0.001
W-PIT7-1861	7-Mar-05	0.012	0.04		<0.0005	<0.001	<0.005	<0.0002	<0.002	<0.001
W-PIT7-1861	15-Jun-05	0.011	0.03		<0.0005	<0.001	<0.005	<0.0002	<0.002	<0.001
W-PIT7-1861	17-Aug-05	0.0117	0.0247		<0.0005	<0.001	<0.002	<0.0002	<0.002	<0.001
W-PIT7-1861	31-Oct-05	0.0123	0.0298		<0.0005	<0.001	<0.002	<0.0002	<0.002	<0.001
W-PIT7-2141	16-Nov-05	0.0106	0.0147		<0.0005	<0.001	<0.002	<0.0002	<0.002 E	<0.001

Notes:

mg/L = Milligrams per lite

B = Analyte found in method blank.

D = Analysis performed at a secondary dilution or concentration (i.e., vapor samples).

E = The analyte was detected below LLNL reporting limit, but above analytical laboratory minimum detection limit.

F = Analyte found in field blank, trip blank, or equipment blank.

J = Analyte was postively identified; the associated numerical value is approximate concentration of the analyte.

L = Spike accuracy not within control limits.

O = Duplicate spike or sample precision not within control limits.

A-10. Ground and surface water analyses for volatile organic compounds (µg/L) in samples collected from the Pit 7 Complex between July 1, 2003 and December 31, 2006.

Location	Sample Date	Carbon tetrachloride (ug/L)	Chloroform (ug/L)	1,1-DCA (ug/L)	1,2-DCA (ug/L)	1,1-DCE (ug/L)	cis-1,2-DCE (ug/L)	trans-1,2-DCE (ug/L)	Total 1,2-DCE (ug/L)	Freon 113 (ug/L)	PCE (ug/L)	1,1,1-TCA (ug/L)	TCE (ug/L)	Freon 11 (ug/L)	Vinyl Chloride (ug/L)	Methylene chloride (ug/L)	1,1,2-TCA (ug/L)
K7-01	9-Sep-03	<0.5	<0.5	<0.5	<0.5	<0.5	<0.5	<0.5	<1	<0.5	<0.5	<0.5	**2.1**	<0.5	<0.5	<1	<0.5
K7-01	2-Dec-03	<0.5	<0.5	<0.5	<0.5	<0.5	<0.5	<0.5	<1	<0.5	<0.5	<0.5	<0.5	<0.5	<0.5	<1	<0.5
K7-01	21-Jan-04	<0.5	<0.5	<0.5	<0.5	<0.5	<0.5	<0.5	<1	<0.5	<0.5	<0.5	**2.1**	<0.5	<0.5	<1	<0.5
K7-01	21-Jan-04	<0.5	<0.5	<0.5	<0.5	<0.5	<0.5	<0.5	<1	<0.5	<0.5	<0.5	**2.2**	<0.5	<0.5	<1	<0.5
K7-01	28-Apr-04	<0.5	<0.5	<0.5	<0.5	<0.5	<0.5	<0.5	<1	<0.5	<0.5	<0.5	**2**	<0.5	<0.5	<1	<0.5
K7-01	4-Aug-04	<0.5	<0.5	<0.5	<0.5	<0.5	<0.5	<0.5	<1	<0.5	<0.5	<0.5	**1.9**	<0.5	<0.5	<1	<0.5
K7-01	2-Nov-04	<0.5	<0.5 E	<0.5	<0.5	<0.5 E	<0.5	<0.5	<1	<0.5	<0.5	<0.5	**1.8**	<0.5 E	<0.5	<1	<0.5
K7-01	24-Jan-05	<0.5	<0.5	<0.5	<0.5	<0.5 E	<0.5	<0.5	<1	<0.5	<0.5	<0.5	**2**	<0.5 E	<0.5	<1	<0.5
K7-01	24-Jan-05	<0.5	<0.5	<0.5	<0.5	<0.5 E	<0.5	<0.5	<1	<0.5	<0.5	<0.5	**1.9**	<0.5 E	<0.5	<1	<0.5
K7-01	5-Apr-05	<0.5	<0.5	<0.5	<0.5	<0.5 E	<0.5	<0.5	<1	<0.5	<0.5	<0.5	**1.7**	<0.5	<0.5	<1	<0.5
K7-01	11-Jul-05	<0.5	<0.5	<0.5	<0.5	<0.5	<0.5	<0.5	<1	<0.5	<0.5	<0.5	**1.4**	<0.5	<0.5	<0.5	<0.5
K7-01	24-Oct-05	<0.5	<0.5	<0.5	<0.5	<0.5 E	<0.5	<0.5	<1	<0.5	<0.5	<0.5	**1.7**	<0.5	<0.5	<0.5	<0.5
K7-01	3-Jan-06	<1	<1	<1	<1	<1 E	<1	<1	<1	<1	<1	<1	**1.7**	<1 E	<1	<1	<1
K7-01	3-Jan-06	<1	<1	<1	<1	<1 E	<1	<1	<1	<1	<1	<1	**1.5**	<1 E	<1	<1	<1
K7-01	13-Apr-06	<1	<1	<1	<1	<1 E	<1	<1	<1	<1	<1	<1	**1.6 BF**	<1 E	<1	<1	<1
K7-01	5-Jul-06	<1	<1	<1	<1	<1 E	<1	<1	<1	<1	<1	<1	**1.6**	<1 E	<1	<1	<1
K7-01	9-Oct-06	<1	<1	<1	<1	<1 E	<1	<1	<1	<1	<1	<1	**1.6**	<1 E	<1	<1	<1
K7-03	17-Sep-03	<0.5	<0.5	<0.5	<0.5	**0.56**	<0.5	<0.5	<1	<0.5	<0.5	<0.5	**2.7**	<0.5	<0.5	<1	<0.5
K7-03	9-Dec-03	<0.5	<0.5	<0.5	<0.5	<0.5	<0.5	<0.5	<1	<0.5	<0.5	<0.5	**1.8**	<0.5	<0.5	<1	<0.5
K7-03	21-Jan-04	<0.5	<0.5	<0.5	<0.5	**0.63**	<0.5	<0.5	<1	<0.5	<0.5	<0.5	**2.7**	<0.5	<0.5	<1	<0.5
K7-03	20-Apr-04	<0.5	<0.5	<0.5	<0.5	**0.73**	<0.5	<0.5	<1	<0.5	<0.5	<0.5	**2.9**	<0.5	<0.5	<1	<0.5
K7-03	10-Aug-04	<0.5	<0.5	<0.5	<0.5	<0.5	<0.5	<0.5	<1	<0.5	<0.5	<0.5	**2.3**	<0.5	<0.5	<1	<0.5
K7-03	29-Oct-04	<0.5	<0.5	<0.5	<0.5	<0.5 E	<0.5	<0.5	<1	<0.5	<0.5	<0.5	**2.2**	<0.5	<0.5	<1	<0.5
K7-03	25-Jan-05	<0.5	<0.5	<0.5	<0.5	**0.86**	<0.5	<0.5	<1	<0.5	<0.5	<0.5	**2.6**	<0.5	<0.5	<1	<0.5
K7-03	14-Apr-05	<0.5	<0.5	<0.5	<0.5	<0.5	<0.5	<0.5	<1	<0.5	<0.5	<0.5	**1.1**	<0.5	<0.5	<1	<0.5
K7-03	14-Apr-05	<0.5	<0.5	<0.5	<0.5	<0.5	<0.5	<0.5	<1	<0.5	<0.5	<0.5	**1**	<0.5	<0.5	<1	<0.5
K7-03	17-May-05	<0.5	<0.5	<0.5	<0.5	<0.5	<0.5	<0.5	<1	<0.5	<0.5	<0.5	<0.5	<0.5	<0.5	<1	<0.5
K7-03	17-May-05	<0.5	<0.5	<0.5	<0.5	<0.5	<0.5	<0.5	<1	<0.5	<0.5	<0.5	<0.5	<0.5	<0.5	<1	<0.5
K7-03	12-Jul-05	<0.5	<0.5	<0.5	<0.5	<0.5 E	<0.5	<0.5	<1	<0.5	<0.5	<0.5	**1.7**	<0.5	<0.5	<0.5	<0.5
K7-03	27-Oct-05	<0.5	<0.5	<0.5	<0.5	<0.5 E	<0.5	<0.5	<1	<0.5	<0.5	<0.5	**2**	<0.5	<0.5	<0.5	<0.5
K7-03	27-Oct-05	<0.5	<0.5	<0.5	<0.5	<0.5 E	<0.5	<0.5	<1	<0.5	<0.5	<0.5	**2**	<0.5	<0.5	<0.5	<0.5
K7-03	5-Jan-06	<1	<1 B	<1	<1	<1 E	<1	<1	<1	<1	<1	<1	**2.5**	<1 E	<1	<1	<1
K7-03	24-Apr-06	<1	<1	<1	<1	<1 E	<1	<1	<1	<1	<1	<1	**1.6**	<1	<1	<1 F	<1
K7-03	24-Apr-06	<1	<1	<1	<1	<1 E	<1	<1	<1	<1	<1 E	<1	**1.5**	<1	<1	<1 F	<1
K7-03	6-Jul-06	<1	<1	<1	<1	<1 E	<1	<1	<1	<1	<1	<1	**2.4**	<1	<1	<1	<1
K7-03	4-Oct-06	<1	<1	<1	<1	**1**	<1 L	<1 L	<1 L	<1	<1	<1	**3**	<1	<1	<1	<1
K7-06	5-Aug-03	<0.5	<0.5	<0.5	<0.5	<0.5	<0.5	<0.5	<1	<0.5	<0.5	<0.5	<0.5	<0.5	<0.5	<1	<0.5
K7-06	4-Dec-03	<0.5	<0.5	<0.5	<0.5	<0.5	<0.5	<0.5	<1	<0.5	<0.5	<0.5	<0.5	<0.5	<0.5	<1	<0.5

A-10. Ground and surface water analyses for volatile organic compounds (µg/L) in samples collected from the Pit 7 Complex between July 1, 2003 and December 31, 2006.

Location	Sample Date	Carbon tetrachloride (ug/L)	Chloroform (ug/L)	1,1-DCA (ug/L)	1,2-DCA (ug/L)	1,1-DCE (ug/L)	cis-1,2-DCE (ug/L)	trans-1,2-DCE (ug/L)	Total 1,2-DCE (ug/L)	Freon 113 (ug/L)	PCE (ug/L)	1,1,1-TCA (ug/L)	TCE (ug/L)	Freon 11 (ug/L)	Vinyl Chloride (ug/L)	Methylene chloride (ug/L)	1,1,2-TCA (ug/L)
K7-06	27-Jan-04	<0.5	<0.5	<0.5	<0.5	<0.5	<0.5	<0.5	<1	<0.5	<0.5	<0.5	<0.5	<0.5	<0.5	<1	<0.5
K7-06	2-Jun-04	<0.5	<0.5	<0.5	<0.5	<0.5	<0.5	<0.5	<1	<0.5	<0.5	<0.5	<0.5	<0.5	<0.5	<1	<0.5
K7-06	2-Jun-04	<0.5	<0.5	<0.5	<0.5	<0.5	<0.5	<0.5	<1	<0.5	<0.5	<0.5	<0.5	<0.5	<0.5	<1	<0.5
K7-06	18-Aug-04	<0.5	<0.5	<0.5	<0.5	<0.5	<0.5	<0.5	<1	<0.5	<0.5	<0.5	<0.5	<0.5	<0.5	<1	<0.5
K7-06	4-Nov-04	<0.5	<0.5	<0.5	<0.5	<0.5	<0.5	<0.5	<1	<0.5	<0.5	<0.5	<0.5	<0.5	<0.5	<1	<0.5
K7-06	4-Nov-04	<0.5	<0.5	<0.5	<0.5	<0.5	<0.5	<0.5	<1	<0.5	<0.5	<0.5	<0.5	<0.5	<0.5	<1	<0.5
K7-06	1-Feb-05	<0.5	<0.5	<0.5	<0.5	<0.5	<0.5	<0.5	<1	<0.5	<0.5	<0.5	<0.5 E	<0.5	<0.5	<1	<0.5
K7-06	5-Apr-05	<0.5	<0.5	<0.5	<0.5	<0.5	<0.5	<0.5	<1	<0.5	<0.5	<0.5	<0.5 E	<0.5	<0.5	<1	<0.5
K7-06	3-Aug-05	<0.5	<0.5	<0.5	<0.5	<0.5	<0.5	<0.5	<1	<0.5	<0.5	<0.5	<0.5	<0.5	<0.5	<0.5	<0.5
K7-06	31-Oct-05	<0.5	<0.5	<0.5	<0.5	<0.5	<0.5	<0.5	<1	<0.5	<0.5	<0.5	<0.5	<0.5	<0.5	<0.5	<0.5
K7-06	13-Jan-06	<1	<1	<1	<1	<1	<1	<1	<1	<1	<1	<1	<0.5 BE	<1	<1	<1	<1
K7-06	25-Apr-06	<1	<1	<1	<1	<1	<1	<1	<1	<1	<1	<1	<0.5	<1	<1	<1	<1
K7-06	5-Jul-06	<1	<1	<1	<1	<1	<1	<1	<1	<1	<1	<1	<0.5	<1	<1	<1	<1
K7-06	2-Oct-06	<1	<1	<1	<1	<1	<1	<1	<1	<1	<1	<1	<0.5	<1	<1	<1	<1
K7-09	9-Sep-03	<0.5	<0.5	<0.5	<0.5	<0.5	<0.5	<0.5	<1	<0.5	**0.58**	<0.5	<0.5	<0.5	<0.5	<1	<0.5
K7-09	9-Sep-03	<0.5	<0.5	<0.5	<0.5	<0.5	<0.5	<0.5	<1	<0.5	<0.5	<0.5	<0.5	<0.5	<0.5	<1	<0.5
K7-09	3-Dec-03	<0.5	<0.5	<0.5	<0.5	<0.5	<0.5	<0.5	<1	<0.5	<0.5	<0.5	<0.5	<0.5	<0.5	<1	<0.5
K7-09	26-Jan-04	<0.5	<0.5	<0.5	<0.5	<0.5	<0.5	<0.5	<1	<0.5	<0.5	<0.5	<0.5	<0.5	<0.5	<1	<0.5
K7-09	3-May-04	<0.5	<0.5	<0.5	<0.5	<0.5	<0.5	<0.5	<1	<0.5	<0.5	<0.5	<0.5	<0.5	<0.5	<1	<0.5
K7-09	17-Aug-04	<0.5	<0.5	<0.5	<0.5	<0.5	<0.5	<0.5	<1	<0.5	<0.5	<0.5	<0.5	<0.5	<0.5	<1	<0.5
K7-09	4-Nov-04	<0.5	<0.5	<0.5	<0.5	<0.5	<0.5	<0.5	<1	<0.5	<0.5	<0.5	<0.5	<0.5	<0.5	<1	<0.5
K7-09	24-Feb-05	<0.5	<0.5	<0.5	<0.5	<0.5	<0.5	<0.5	<1	<0.5 E	<0.5 E	<0.5	<0.5	<0.5	<0.5	<1	<0.5
K7-09	4-Apr-05	<0.5	<0.5	<0.5	<0.5	<0.5	<0.5	<0.5	<1	<0.5	<0.5	<0.5	<0.5	<0.5	<0.5	<1	<0.5
K7-09	2-Aug-05	<0.5	<0.5	<0.5	<0.5	<0.5	<0.5	<0.5	<1	<0.5	<0.5	<0.5	<0.5	<0.5	<0.5	<0.5	<0.5
K7-09	1-Nov-05	<0.5	<0.5	<0.5	<0.5	<0.5	<0.5	<0.5	<1	<0.5	<0.5	<0.5	<0.5	<0.5	<0.5	<0.5	<0.5
K7-09	4-Jan-06	<1	<1	<1	<1	<1	<1	<1	<1	<1	<1	<1	<0.5	<1	<1	<1	<1
K7-09	2-May-06	<1	<1	<1	<1	<1	<1	<1	<1	<1	<1	<1	<0.5	<1	<1	<1	<1
K7-09	17-Jul-06	<1	<1	<1	<1	<1	<1	<1	<1	<1	<1	<1	<0.5	<1	<1	<1	<1
K7-09	17-Jul-06	<1	<1	<1	<1	<1	<1	<1	<1	<1	<1	<1	<0.5	<1	<1	<1	<1
K7-09	4-Oct-06	<1	<1	<1	<1	<1	<1 L	<1 L	<1 L	<1	<1	<1	<0.5	<1	<1	<1	<1
K7-10	31-Jul-03	<0.5	<0.5	<0.5	<0.5	<0.5	<0.5	<0.5	<1	<0.5	<0.5	<0.5	<0.5	<0.5	<0.5	<1	<0.5
K7-10	4-Dec-03	<0.5	<0.5	<0.5	<0.5	<0.5	<0.5	<0.5	<1	<0.5	<0.5	<0.5	<0.5	<0.5	<0.5	<1	<0.5
K7-10	27-Jan-04	<0.5	<0.5	<0.5	<0.5	<0.5	<0.5	<0.5	<1	<0.5	<0.5	<0.5	<0.5	<0.5	<0.5	<1	<0.5
K7-10	3-May-04	<0.5	<0.5	<0.5	<0.5	<0.5	<0.5	<0.5	<1	<0.5	<0.5	<0.5	<0.5	<0.5	<0.5	<1	<0.5
K7-10	17-Aug-04	<0.5	<0.5	<0.5	<0.5	<0.5	<0.5	<0.5	<1	<0.5	<0.5	<0.5	<0.5	<0.5	<0.5	<1	<0.5
K7-10	23-Nov-04	<0.5	<0.5	<0.5	<0.5	<0.5	<0.5	<0.5	<1	<0.5	<0.5	<0.5	<0.5	<0.5	<0.5	<1	<0.5
K7-10	3-Feb-05	<0.5	<0.5	<0.5	<0.5	<0.5	<0.5	<0.5	<1	<0.5	<0.5	<0.5	<0.5	<0.5	<0.5	<1	<0.5
K7-10	4-Apr-05	<0.5	<0.5	<0.5	<0.5	<0.5	<0.5	<0.5	<1	<0.5	<0.5	<0.5	<0.5	<0.5	<0.5	<1	<0.5

A-10. Ground and surface water analyses for volatile organic compounds (µg/L) in samples collected from the Pit 7 Complex between July 1, 2003 and December 31, 2006.

Location	Sample Date	Carbon tetrachloride (ug/L)	Chloroform (ug/L)	1,1-DCA (ug/L)	1,2-DCA (ug/L)	1,1-DCE (ug/L)	cis-1,2-DCE (ug/L)	trans-1,2-DCE (ug/L)	Total 1,2-DCE (ug/L)	Freon 113 (ug/L)	PCE (ug/L)	1,1,1-TCA (ug/L)	TCE (ug/L)	Freon 11 (ug/L)	Vinyl Chloride (ug/L)	Methylene chloride (ug/L)	1,1,2-TCA (ug/L)
K7-10	2-Aug-05	<0.5	<0.5	<0.5	<0.5	<0.5	<0.5	<0.5	<1	<0.5	<0.5	<0.5	<0.5	<0.5	<0.5	<0.5	<0.5
K7-10	1-Nov-05	<0.5	<0.5	<0.5	<0.5	<0.5	<0.5	<0.5	<1	<0.5	<0.5	<0.5	<0.5	<0.5	<0.5	<0.5	<0.5
K7-10	4-Jan-06	<1	<1	<1	<1	<1	<1	<1	<1	<1	<1	<1	<0.5	<1	<1	<1	<1
K7-10	2-May-06	<1	<1	<1	<1	<1	<1	<1	<1	<1	<1	<1	<0.5	<1	<1	<1	<1
K7-10	17-Jul-06	<1	<1	<1	<1	<1	<1	<1	<1	<1	<1	<1	<0.5	<1	<1	<1	<1
K7-10	2-Oct-06	<1	<1	<1	<1	<1	<1	<1	<1	<1	<1	<1	<0.5	<1	<1	<1	<1
K7-10	2-Oct-06	<1	<1	<1	<1	<1	<1	<1	<1	<1	<1	<1	<0.5	<1	<1	<1	<1
MUL2	21-Aug-03	<0.21	<0.2	<0.2	<0.2	<0.2	<0.2	<0.2	<0.4	<0.23	<0.2	<0.2	<0.2	<0.21	<0.24	<0.2	<0.2
MUL2	28-Jul-04	<0.2	<0.2	<0.2	<0.2	<0.2	<0.2	<0.2	<0.4	<0.2	<0.2	<0.2	<0.2	<0.2	<0.2	<0.2	<0.2
MUL2	2-Aug-05	<0.5	<0.5	<0.5	<0.5	<0.5	<0.5	<0.5	<1	<0.5	<0.5	<0.5	<0.5	<0.5	<0.5	<0.5	<0.5
MUL2	25-Jan-06	<0.5	<0.5	<0.5	<0.5	<0.5	<0.5	<0.5	<1	<0.5	<0.5	<0.5 L	<0.5	<0.5	<0.5	<0.5	<0.5
MUL2	8-Aug-06	<0.5	<0.5	<0.5	<0.5	<0.5	<0.5	<0.5	<1	<0.5	<0.5	<0.5	<0.5	<0.5	<0.5	<0.5	<0.5
NC7-12	4-Aug-05	<0.5	<0.5	<0.5	<0.5	<0.5	<0.5	<0.5	<1	<0.5	<0.5	<0.5	<0.5	<0.5	<0.5	<0.5	<0.5
NC7-12	16-Aug-06	<0.5	<0.5	<0.5	<0.5	<0.5	<0.5	<0.5	<1	<0.5	<0.5	<0.5	<0.5	<0.5	<0.5	<0.5	<0.5
NC7-16	15-Nov-05	<0.5	<0.5	<0.5	<0.5	<0.5	<0.5	<0.5	<1	<0.5	<0.5	<0.5	<0.5	<0.5	<0.5	<0.5	<0.5
NC7-16	15-Nov-05	<0.5	<0.5	<0.5	<0.5	<0.5	<0.5	<0.5	<1	<0.5	<0.5	<0.5	<0.5	<0.5	<0.5	<0.5	<0.5
NC7-16	17-Oct-06	<0.5	<0.5	<0.5	<0.5	<0.5	<0.5	<0.5	<1	<0.5	<0.5	<0.5	<0.5	<0.5	<0.5	<0.5	<0.5
NC7-21	29-Nov-04	<0.5	<0.5	<0.5	<0.5	<0.5	<0.5	<0.5	<0.5	<1	<0.5	<0.5	<0.5	<0.5	<0.5	<3	<0.5
NC7-21	30-Nov-05	<0.5	<0.5	<0.5	<0.5	<0.5	<0.5	<0.5	<1	<0.5	<0.5	<0.5	<0.5	<0.5	<0.5	<0.5	<0.5
NC7-21	18-Oct-06	<0.5	<0.5	<0.5	<0.5	<0.5	<0.5	<0.5	<1	<0.5	<0.5	<0.5	<0.5	<0.5	<0.5	<0.5	<0.5
NC7-25	31-Jul-03	<0.5	<0.5	<0.5	<0.5	<0.5	<0.5	<0.5	<1	<0.5	<0.5	<0.5	<0.5	<0.5	<0.5	<1	<0.5
NC7-25	5-Dec-03	<0.5	<0.5	<0.5	<0.5	<0.5	<0.5	<0.5	<1	<0.5	<0.5	<0.5	<0.5	<0.5	<0.5	<1	<0.5
NC7-25	4-Mar-04	<0.5	<0.5	<0.5	<0.5	<0.5	<0.5	<0.5	<1	<0.5	<0.5	<0.5	<0.5	<0.5	<0.5	<1	<0.5
NC7-25	29-Apr-04	<0.5	<0.5	<0.5	<0.5	<0.5	<0.5	<0.5	<1	<0.5	<0.5	<0.5	<0.5	<0.5	<0.5	<1	<0.5
NC7-25	22-Jul-04	<0.5	<0.5	<0.5	<0.5	<0.5	<0.5	<0.5	<1	<0.5	<0.5	<0.5	<0.5	<0.5	<0.5	<1	<0.5
NC7-25	29-Oct-04	<0.5	<0.5	<0.5	<0.5	<0.5	<0.5	<0.5	<1	<0.5	<0.5	<0.5	<0.5	<0.5	<0.5	<1	<0.5
NC7-25	25-Jan-05	<0.5	<0.5	<0.5	<0.5	<0.5	<0.5	<0.5	<1	<0.5	<0.5	<0.5	<0.5	<0.5	<0.5	<1	<0.5
NC7-25	6-Apr-05									<0.5							
NC7-25	6-Apr-05	<0.5	<0.5	<0.5	<0.5	<0.5	<0.5	<0.5	<1	<0.5	<0.5	<0.5	<0.5	<0.5	<0.5	<1	<0.5
NC7-25	12-Jul-05	<0.5	<0.5	<0.5	<0.5	<0.5	<0.5	<0.5	<1	<0.5	<0.5	<0.5	<0.5	<0.5	<0.5	<0.5	<0.5
NC7-25	26-Oct-05	<0.5	<0.5	<0.5	<0.5	<0.5	<0.5	<0.5	<1	<0.5	<0.5	<0.5	<0.5	<0.5	<0.5	<0.5	<0.5
NC7-25	5-Jan-06	<1	<1 B	<1	<1	<1	<1	<1	<1	<1	<1	<1	<0.5	<1 E	<1	<1	<1
NC7-25	24-Apr-06	<1	<1	<1	<1	<1	<1	<1	<1	<1	<1	<1	<0.5	<1 E	<1	<1 F	<1
NC7-25	10-Jul-06	<1	<1	<1	<1	<1	<1	<1	<1	<1	<1	<1	<0.5	<1	<1	<1	<1
NC7-25	4-Oct-06	<1	<1	<1	<1	<1	<1 L	<1 L	<1 L	<1	<1	<1	<0.5	<1 E	<1	<1	<1
NC7-26	12-Sep-03	<0.5	<0.5	<0.5	<0.5	<0.5	<0.5	<0.5	<1	<0.5	<0.5	<0.5	<0.5	<0.5	<0.5	<1	<0.5
NC7-26	8-Dec-03	<0.5	<0.5	<0.5	<0.5	<0.5	<0.5	<0.5	<1	<0.5	<0.5	<0.5	<0.5	<0.5	<0.5	<1	<0.5
NC7-26	27-Jan-04	<0.5	<0.5	<0.5	<0.5	<0.5	<0.5	<0.5	<1	<0.5	<0.5	<0.5	<0.5	<0.5	<0.5	<1	<0.5

A-10. Ground and surface water analyses for volatile organic compounds (µg/L) in samples collected from the Pit 7 Complex between July 1, 2003 and December 31, 2006.

Location	Sample Date	Carbon tetrachloride (ug/L)	Chloroform (ug/L)	1,1-DCA (ug/L)	1,2-DCA (ug/L)	1,1-DCE (ug/L)	cis-1,2-DCE (ug/L)	trans-1,2-DCE (ug/L)	Total 1,2-DCE (ug/L)	Freon 113 (ug/L)	PCE (ug/L)	1,1,1-TCA (ug/L)	TCE (ug/L)	Freon 11 (ug/L)	Vinyl Chloride (ug/L)	Methylene chloride (ug/L)	1,1,2-TCA (ug/L)
NC7-26	29-Apr-04	<0.5	<0.5	<0.5	<0.5	<0.5	<0.5	<0.5	<1	<0.5	<0.5	<0.5	<0.5	<0.5	<0.5	<1	<0.5
NC7-26	5-Aug-04	<0.5	<0.5	<0.5	<0.5	<0.5	<0.5	<0.5	<1	<0.5	<0.5	<0.5	<0.5	<0.5	<0.5	<1	<0.5
NC7-26	2-Nov-04	<0.5	<0.5	<0.5	<0.5	<0.5	<0.5	<0.5	<1	<0.5	<0.5	<0.5 E	<0.5	<0.5	<0.5	<1	<0.5
NC7-26	27-Jan-05	<0.5	<0.5	<0.5	<0.5	<0.5	<0.5	<0.5	<1	<0.5	<0.5	<0.5	<0.5	<0.5	<0.5	<1	<0.5
NC7-26	6-Apr-05	<0.5	<0.5	<0.5	<0.5	<0.5	<0.5	<0.5	<1	<0.5	<0.5	<0.5 E	<0.5	<0.5	<0.5	<1	<0.5
NC7-26	12-Jul-05	<0.5	<0.5	<0.5	<0.5	<0.5	<0.5	<0.5	<1	<0.5	<0.5	<0.5	<0.5	<0.5	<0.5	<0.5	<0.5
NC7-26	20-Oct-05	<0.5	<0.5	<0.5	<0.5	<0.5	<0.5	<0.5	<1	<0.5	<0.5	<0.5	<0.5	<0.5	<0.5	<0.5	<0.5
NC7-26	10-Jan-06	<1	<1	<1	<1	<1	<1	<1	<1	<1	<1	<1	<0.5	<1	<1 E	<1	<1
NC7-26	27-Apr-06	<1	<1	<1	<1	<1	<1	<1	<1	<1	<1	<1	<0.5	<1	<1	<1	<1
NC7-26	10-Jul-06	<1	<1	<1	<1	<1	<1	<1	<1	<1	<1	<1	<0.5	<1	<1	<1	<1
NC7-26	2-Oct-06	<1	<1	<1	<1	<1	<1	<1	<1	<1	<1	<1	<0.5	<1	<1	<1	<1
NC7-34	4-Dec-03	<0.5	<0.5	<0.5	<0.5	<0.5	<0.5	<0.5	<0.5	<0.5	<0.5	<0.5	<0.5	**0.7**	<0.5	<3	<0.5
NC7-34	29-Nov-04	<0.5	<0.5	<0.5	<0.5	<0.5	<0.5	<0.5	<0.5	<1	<0.5	<0.5	<0.5	<0.5	<0.5	<3	<0.5
NC7-34	22-Nov-05	<0.5	<0.5	<0.5	<0.5	<0.5	<0.5	<0.5	<1	<0.5	<0.5	<0.5	<0.5 L	**0.66**	<0.5	<0.5	<0.5
NC7-34	22-Nov-05	<0.5	<0.5	<0.5	<0.5	<0.5	<0.5	<0.5	<1	<0.5	<0.5	<0.5	<0.5 L	**0.65**	<0.5	<0.5	<0.5
NC7-34	1-Dec-06	<0.5	<0.5	<0.5	<0.5	<0.5	<0.5	<0.5	<1	<0.5	<0.5	<0.5	<0.5	<0.5	<0.5	<0.5	<0.5
NC7-36	16-Dec-03	<0.5	<0.5	<0.5	<0.5	<0.5 L	<0.5	<0.5	<0.5	<0.5	<0.5	<0.5	<0.5 L	**0.6**	<0.5	<3	<0.5
NC7-36	6-Dec-04	<0.5	<0.5	<0.5	<0.5	<0.5	<0.5	<0.5	<1	<0.5	<0.5	<0.5	<0.5	**0.53**	<0.5 O	<1	<0.5
NC7-36	6-Dec-04	<0.5	<0.5	<0.5	<0.5	<0.5	<0.5	<0.5	<0.5	<1	<0.5	<0.5	<0.5	<0.5	<0.5	<3	<0.5
NC7-36	6-Dec-04	<0.5	<0.5	<0.5	<0.5	<0.5	<0.5	<0.5	<0.5	<1	<0.5	<0.5	<0.5	<0.5	<0.5	<3	<0.5
NC7-36	22-Nov-05	<0.5	<0.5	<0.5	<0.5	<0.5	<0.5	<0.5	<1	<0.5	<0.5	<0.5	<0.5 L	<0.5 E	<0.5	<0.5	<0.5
NC7-36	1-Dec-06	<0.5	<0.5	<0.5	<0.5	<0.5	<0.5	<0.5	<1	<0.5	<0.5	<0.5	<0.5	<0.5	<0.5	<0.5	<0.5
NC7-37	10-Oct-05	<0.5	<0.5	<0.5	<0.5	<0.5	<0.5	<0.5	<1	<0.5	<0.5	<0.5	<0.5 E	<0.5	<0.5	<0.5	<0.5
NC7-37	28-Nov-06	<0.5	<0.5	<0.5	<0.5	<0.5	<0.5	<0.5	<1	<0.5	<0.5	<0.5	<0.5	<0.5	<0.5	<0.5	<0.5
NC7-40	31-Oct-03	<0.5	<0.5	<0.5	<0.5	<0.5 L	<0.5	<0.5	<0.5	<0.5	<0.5	<0.5	<0.5 L	<0.5	<0.5	<3	<0.5
NC7-40	30-Nov-04	<0.5	<0.5	<0.5	<0.5	<0.5 L	<0.5	<0.5	<0.5	<1	<0.5	<0.5	<0.5 JL	<0.5	<0.5	<3	<0.5
NC7-40	11-Oct-05	<0.5	<0.5	<0.5	<0.5	<0.5	<0.5	<0.5	<1	<0.5	<0.5	<0.5	<0.5	<0.5	<0.5	<0.5	<0.5
NC7-40	18-Oct-06	<0.5	<0.5	<0.5	<0.5	<0.5	<0.5	<0.5	<1	<0.5	<0.5	<0.5	<0.5	<0.5	<0.5	<1	<0.5
NC7-40	18-Oct-06	<0.5	<0.5	<0.5	<0.5	<0.5	<0.5	<0.5	<1	<0.5	<0.5	<0.5	<0.5	<0.5	<0.5	<0.5	<0.5
NC7-47	5-Aug-03	<0.5	<0.5	<0.5	<0.5	<0.5	<0.5	<0.5	<1	<0.5	<0.5	<0.5	<0.5	<0.5	<0.5	<1	<0.5
NC7-47	5-Dec-03	<0.5	<0.5	<0.5	<0.5	<0.5	<0.5	<0.5	<1	<0.5	<0.5	<0.5	<0.5	<0.5	<0.5	<1	<0.5
NC7-47	8-Mar-04	<0.5	<0.5	<0.5	<0.5	<0.5	<0.5	<0.5	<1	<0.5	<0.5	<0.5	<0.5	<0.5	<0.5	<1	<0.5
NC7-47	26-Apr-04	<0.5	<0.5	<0.5	<0.5	<0.5	<0.5	<0.5	<1	<0.5	<0.5	<0.5	<0.5	<0.5	<0.5	<1	<0.5
NC7-47	29-Jul-04	<0.5	<0.5	<0.5	<0.5	<0.5	<0.5	<0.5	<1	<0.5	<0.5	<0.5	<0.5	<0.5	<0.5	<1	<0.5
NC7-47	29-Jul-04	<0.5	<0.5	<0.5	<0.5	<0.5	<0.5	<0.5	<1	<0.5	<0.5	<0.5	<0.5	<0.5	<0.5	<1	<0.5
NC7-47	28-Oct-04	<0.5	<0.5	<0.5	<0.5	<0.5	<0.5	<0.5	<1	<0.5	<0.5	<0.5	<0.5	<0.5	<0.5	<1	<0.5
NC7-47	26-Jan-05	<0.5	<0.5	<0.5	<0.5	<0.5	<0.5	<0.5	<1	<0.5	<0.5	<0.5	<0.5	<0.5	<0.5	<1	<0.5
NC7-47	26-Apr-05	<0.5	<0.5	<0.5	<0.5	<0.5	<0.5	<0.5	<1	<0.5	<0.5	<0.5	<0.5	<0.5	<0.5	<1	<0.5

A-10. Ground and surface water analyses for volatile organic compounds (µg/L) in samples collected from the Pit 7 Complex between July 1, 2003 and December 31, 2006.

Location	Sample Date	Carbon tetrachloride (ug/L)	Chloroform (ug/L)	1,1-DCA (ug/L)	1,2-DCA (ug/L)	1,1-DCE (ug/L)	cis-1,2-DCE (ug/L)	trans-1,2-DCE (ug/L)	Total 1,2-DCE (ug/L)	Freon 113 (ug/L)	PCE (ug/L)	1,1,1-TCA (ug/L)	TCE (ug/L)	Freon 11 (ug/L)	Vinyl Chloride (ug/L)	Methylene chloride (ug/L)	1,1,2-TCA (ug/L)
NC7-47	5-Jul-05	<0.5	<0.5	<0.5	<0.5	<0.5	<0.5	<0.5	<0.5	<0.5	<0.5	<0.5	<0.5	<0.5	<0.5	<0.5	<0.5
NC7-47	5-Jul-05	<0.5	<0.5	<0.5	<0.5	<0.5	<0.5	<0.5	<0.5	<0.5	<0.5	<0.5	<0.5	<0.5	<0.5	<0.5	<0.5
NC7-47	19-Oct-05	<0.5	<0.5	<0.5	<0.5	<0.5	<0.5	<0.5	<1	<0.5	<0.5	<0.5	<0.5	<0.5	<0.5	<0.5	<0.5
NC7-47	19-Jan-06	<1	<1	<1	<1	<1	<1	<1	<1	<1	<1	<1	<0.5 BE	<1	<1	<1	<1
NC7-47	4-Apr-06	<1	<1	<1	<1	<1	<1	<1	<1	<1	<1	<1	<0.5	<1	<1	<1	<1
NC7-47	6-Jul-06	<1	<1	<1	<1	<1	<1	<1	<1	<1	<1	<1	<0.5	<1	<1	<1	<1
NC7-47	3-Oct-06	<1	<1	<1	<1	<1	<1	<1	<1	<1	<1	<1	<0.5	<1	<1	<1	<1
NC7-48	5-Aug-03	<0.5	<0.5	<0.5	<0.5	<0.5	<0.5	<0.5	<1	<0.5	<0.5	<0.5	<0.5	<0.5	<0.5	<1	<0.5
NC7-48	9-Dec-03	<0.5	<0.5	<0.5	<0.5	<0.5	<0.5	<0.5	<1	<0.5	<0.5	<0.5	<0.5	<0.5	<0.5	<1	<0.5
NC7-48	9-Dec-03	<0.5	<0.5	<0.5	<0.5	<0.5	<0.5	<0.5	<1	<0.5	<0.5	<0.5	<0.5	<0.5	<0.5	<1	<0.5
NC7-48	9-Mar-04	<0.5	<0.5	<0.5	<0.5	<0.5	<0.5	<0.5	<1	<0.5	<0.5	<0.5	<0.5	<0.5	<0.5	<1	<0.5
NC7-48	28-Apr-04	<0.5	<0.5	<0.5	<0.5	<0.5	<0.5	<0.5	<1	<0.5	<0.5	<0.5	<0.5	<0.5	<0.5	<1	<0.5
NC7-48	10-Aug-04	<0.5	<0.5	<0.5	<0.5	<0.5	<0.5	<0.5	<1	<0.5	<0.5	<0.5	<0.5	<0.5	<0.5	<1	<0.5
NC7-48	2-Nov-04	<0.5	<0.5	<0.5	<0.5	<0.5	<0.5	<0.5	<1	<0.5	<0.5	<0.5	<0.5	<0.5	<0.5	<1	<0.5
NC7-48	3-Feb-05	<0.5	<0.5	<0.5	<0.5	<0.5	<0.5	<0.5	<1	<0.5	<0.5	<0.5	<0.5	<0.5 E	<0.5	<1	<0.5
NC7-48	6-Apr-05	<0.5	<0.5	<0.5	<0.5	<0.5	<0.5	<0.5	<1	<0.5	<0.5	<0.5	<0.5	<0.5 E	<0.5	<1	<0.5
NC7-48	11-Jul-05	<0.5	<0.5	<0.5	<0.5	<0.5	<0.5	<0.5	<1	<0.5	<0.5	<0.5	<0.5	<0.5	<0.5	<0.5	<0.5
NC7-48	20-Oct-05	<0.5	<0.5	<0.5	<0.5	<0.5	<0.5	<0.5	<1	<0.5	<0.5	<0.5	<0.5	<0.5	<0.5	<0.5	<0.5
NC7-48	13-Jan-06	<1	<1	<1	<1	<1	<1	<1	<1	<1	<1	<1	<0.5 B	<1 E	<1	<1	<1
NC7-48	25-Apr-06	<1	<1	<1	<1	<1	<1	<1	<1	<1	<1	<1	<0.5	<1 E	<1	<1	<1
NC7-48	6-Jul-06	<1	<1	<1	<1	<1	<1	<1	<1	<1	<1	<1	<0.5	<1 E	<1	<1	<1
NC7-48	2-Oct-06	<1	<1	<1	<1	<1	<1	<1	<1	<1	<1	<1	<0.5	<1 E	<1	<1	<1
NC7-50	31-Jul-03	<0.5	<0.5	<0.5	<0.5	<0.5	<0.5	<0.5	<0.5	<0.5	<0.5	<0.5	<0.5	<0.5	<0.5	<3	<0.5
NC7-50	11-Nov-03	<0.5	<0.5	<0.5	<0.5	<0.5	<0.5	<0.5	<0.5	<0.5	<0.5	<0.5	<0.5	<0.5	<0.5	<3	<0.5
NC7-50	1-Mar-04	<0.5	<0.5	<0.5	<0.5	<0.5	<0.5	<0.5	<1	<0.5	<0.5	<0.5	<0.5	<0.5	<0.5	<1	<0.5
NC7-50	1-Mar-04	<0.5	<0.5	<0.5	<0.5	<0.5	<0.5	<0.5	<1	<0.5	<0.5	<0.5	<0.5	<0.5	<0.5	<1	<0.5
NC7-51	16-Oct-03	<0.5	<0.5	<0.5	<0.5	<0.5	<0.5	<0.5	<0.5	<0.5	<0.5	<0.5	<0.5	<0.5	<0.5	<3	<0.5
NC7-51	1-Nov-04	<0.5	<0.5	<0.5	<0.5	<0.5	<0.5	<0.5	<0.5		<0.5	<0.5	<0.5	<0.5	<0.5	<3	<0.5
NC7-51	20-Nov-04	<0.5 L	<0.5 L	<0.5 L	<0.5 L	<0.5 L	<0.5 L	<0.5 L	<0.5 L	<1 L	<0.5 L	<0.5 L	<0.5 L	<0.5 L	<0.5 L	<3 L	<0.5 L
NC7-51	10-Oct-05	<0.5	<0.5	<0.5	<0.5	<0.5	<0.5	<0.5	<1	<0.5	<0.5	<0.5	<0.5 E	<0.5	<0.5	<0.5	<0.5
NC7-51	5-Dec-06	<0.5	<0.5	<0.5	<0.5	<0.5	<0.5	<0.5	<1	<0.5	<0.5	<0.5	**1.1**	<0.5	<0.5	<1	<0.5
NC7-51	5-Dec-06	<0.5	<0.5	<0.5	<0.5	<0.5	<0.5	<0.5	<1	<0.5	<0.5	<0.5	**1.2**	<0.5	<0.5	<0.5	<0.5
NC7-52	11-Nov-03	<0.5	<0.5	<0.5	<0.5	<0.5	<0.5	<0.5	<0.5	<0.5	<0.5	<0.5	<0.5	<0.5	<0.5	<3	<0.5
NC7-67	13-Nov-03	<1	<1	<1	<1	<1 L	<1	<1	<1	<1	<1	<1	<1 L	<1	<1	<3	<1
NC7-67	19-Nov-04	<0.5	<0.5	<0.5	<0.5	<0.5	<0.5	<0.5	<0.5	<1	<0.5	<0.5	<0.5 L	<0.5	<0.5	<3	<0.5
NC7-67	11-Oct-05	<0.5	<0.5	<0.5	<0.5	<0.5	<0.5	<0.5	<1	<0.5	<0.5	<0.5	<0.5	<0.5	<0.5	<0.5	<0.5
NC7-67	30-Nov-06	<0.5	<0.5	<0.5	<0.5	<0.5	<0.5	<0.5	<1	<0.5	<0.5	<0.5	<0.5	<0.5	<0.5	<0.5	<0.5
SPRING13	20-Dec-04	<0.5	<0.5	<0.5	<0.5	<0.5	<0.5	<0.5	<1	<0.5	<0.5	<0.5	<0.5	<0.5	<0.5	<1	<0.5

A-10. Ground and surface water analyses for volatile organic compounds (µg/L) in samples collected from the Pit 7 Complex between July 1, 2003 and December 31, 2006.

Location	Sample Date	Carbon tetrachloride (ug/L)	Chloroform (ug/L)	1,1-DCA (ug/L)	1,2-DCA (ug/L)	1,1-DCE (ug/L)	cis-1,2-DCE (ug/L)	trans-1,2-DCE (ug/L)	Total 1,2-DCE (ug/L)	Freon 113 (ug/L)	PCE (ug/L)	1,1,1-TCA (ug/L)	TCE (ug/L)	Freon 11 (ug/L)	Vinyl Chloride (ug/L)	Methylene chloride (ug/L)	1,1,2-TCA (ug/L)
SPRING13	7-Dec-05	<0.5	<0.5	<0.5	<0.5	<0.5	<0.5	<0.5	<1	<0.5	<0.5	<0.5	<0.5	<0.5	<0.5	<0.5	<0.5
W-865-01	6-Aug-03	<0.5	2	<0.5	<0.5	<0.5	<0.5	<0.5	<0.5	<0.5	<0.5	<0.5	<0.5	<0.5	<0.5	<3	<0.5
W-865-01	17-Nov-03	<0.5	<0.5	<0.5	<0.5	<0.5	<0.5	<0.5	<0.5	<0.5	<0.5	<0.5	<0.5	<0.5	<0.5	<3	<0.5
W-865-01	3-Mar-04	<0.5	<0.5	<0.5	<0.5	<0.5	<0.5	<0.5	<0.5	<0.5	<0.5	<0.5	<0.5	<0.5	<0.5	<3	<0.5
W-865-01	5-May-04	<0.5	<0.5	<0.5	<0.5	<0.5	<0.5	<0.5	<0.5	<0.5	<0.5	<0.5	<0.5 L	<0.5	<0.5	<3	<0.5
W-865-01	3-Nov-04	<0.5	<0.5	<0.5	<0.5	<0.5	<0.5	<0.5	<0.5		<0.5	<0.5	<0.5 LO	<0.5	<0.5	<3	<0.5
W-865-01	29-Jan-05	<0.5	<0.5	<0.5	<0.5	<0.5	<0.5	<0.5	<0.5	<0.5	<0.5	<0.5	<0.5	<0.5	<0.5	<0.5	<0.5
W-865-01	17-May-05	<0.5	<0.5	<0.5	<0.5	<0.5	<0.5	<0.5	<0.5	<0.5	<0.5	<0.5	<0.5	<0.5	<0.5	<0.5	<0.5
W-865-01	24-Aug-05	<0.5	<0.5	<0.5	<0.5	<0.5 L	<0.5	<0.5	<0.5	<0.5	<0.5	<0.5	<0.5	<0.5	<0.5	<0.5	<0.5
W-865-01	19-Oct-05	<0.5	<0.5	<0.5	<0.5	<0.5 L	<0.5	<0.5	<0.5	<0.5	<0.5	<0.5	<0.5	<0.5	<0.5	<0.5	<0.5
W-865-01	16-Jan-06	<0.5	<0.5	<0.5	<0.5	<0.5	<0.5	<0.5	<1	<0.5	<0.5	<0.5	<0.5	<0.5	<0.5	<0.5	<0.5
W-865-01	11-Apr-06	<0.5	<0.5	<0.5	<0.5	<0.5 L	<0.5	<0.5	<1	<0.5	<0.5	<0.5	<0.5 L	<0.5	<0.5	<0.5	<0.5
W-865-01	30-Aug-06	<0.5	<0.5	<0.5	<0.5	<0.5	<0.5	<0.5	<1	<0.5	<0.5	<0.5	<0.5	<0.5	<0.5	<0.5	<0.5
W-865-01	14-Dec-06	<0.5	<0.5	<0.5	<0.5	<0.5	<0.5	<0.5	<1	<0.5	<0.5	<0.5	<0.5	<0.5	<0.5	<0.5	<0.5
W-865-03	6-Aug-03	<0.5	<0.5	<0.5	<0.5	<0.5	<0.5	<0.5	<0.5	<0.5	<0.5	<0.5	<0.5	<0.5	<0.5	<3	<0.5
W-865-03	17-Nov-03	<0.5	<0.5	<0.5	<0.5	<0.5	<0.5	<0.5	<0.5	<0.5	<0.5	<0.5	<0.5	<0.5	<0.5	<3	<0.5
W-865-03	3-Mar-04	<0.5	<0.5	<0.5	<0.5	<0.5	<0.5	<0.5	<0.5	<0.5	<0.5	<0.5	<0.5	<0.5	<0.5	<3	<0.5
W-865-03	5-May-04	<0.5	<0.5	<0.5	<0.5	<0.5	<0.5	<0.5	<0.5	<0.5	<0.5	<0.5	<0.5 L	<0.5	<0.5	<3	<0.5
W-865-03	2-Nov-04	<0.5 LO	<0.5 LO	<0.5 LO	<0.5 LO	<0.5 LO	<0.5 LO	<0.5 LO	<0.5 LO		<0.5 LO	<0.5 LO	<0.5 LO	<0.5 LO	<0.5 LO	<3 LO	<0.5 LO
W-865-03	29-Jan-05	<0.5	<0.5	<0.5	<0.5	<0.5	<0.5	<0.5	<0.5	<0.5	<0.5	<0.5	<0.5	<0.5	<0.5	<0.5	<0.5
W-865-03	20-May-05	<0.5	<0.5	<0.5	<0.5	<0.5	<0.5	<0.5	<0.5	<0.5	<0.5	<0.5	<0.5	<0.5	<0.5	<0.5	<0.5
W-865-03	24-Aug-05	<0.5	<0.5	<0.5	<0.5	<0.5 L	<0.5	<0.5	<0.5	<0.5	<0.5	<0.5	<0.5	<0.5	<0.5	<0.5	<0.5
W-865-03	19-Oct-05	<0.5	<0.5	<0.5	<0.5	<0.5 L	<0.5	<0.5	<0.5	<0.5	<0.5	<0.5	<0.5	<0.5	<0.5	<0.5	<0.5
W-865-03	16-Jan-06	<0.5	<0.5	<0.5	<0.5	<0.5	<0.5	<0.5	<1	<0.5	<0.5	<0.5	<0.5	<0.5	<0.5	<0.5	<0.5
W-865-03	11-Apr-06	<0.5	<0.5	<0.5	<0.5	<0.5 L	<0.5	<0.5	<1	<0.5	<0.5	<0.5	<0.5 L	<0.5	<0.5	<0.5	<0.5
W-865-03	31-Aug-06	<0.5	<0.5	<0.5	<0.5	<0.5	<0.5	<0.5	<1	<0.5	<0.5	<0.5	<0.5	<0.5	<0.5	<0.5	<0.5
W-865-03	19-Dec-06	<0.5	<0.5	<0.5	<0.5	<0.5	<0.5	<0.5	<1	<0.5	<0.5	<0.5	<0.5	<0.5	<0.5	<0.5	<0.5
W-865-04	6-Aug-03	<0.5	<0.5	<0.5	<0.5	<0.5	<0.5	<0.5	<0.5	<0.5	<0.5	<0.5	<0.5	<0.5	<0.5	<3	<0.5
W-865-04	17-Nov-03	<0.5	<0.5	<0.5	<0.5	<0.5	<0.5	<0.5	<0.5	<0.5	<0.5	<0.5	<0.5	<0.5	<0.5	<3	<0.5
W-865-04	24-Feb-04	<0.5	<0.5	<0.5	<0.5	<0.5	<0.5	<0.5	<0.5	<0.5	<0.5	<0.5	<0.5	<0.5	<0.5	<3	<0.5
W-865-04	5-May-04	<0.5	<0.5	<0.5	<0.5	<0.5	<0.5	<0.5	<0.5	<0.5	<0.5	<0.5	<0.5 L	<0.5	<0.5	<3	<0.5
W-865-04	5-May-04	<0.5	<0.5	<0.5	<0.5	<0.5	<0.5	<0.5	<0.5	<0.5	<0.5	<0.5	<0.5 L	<0.5	<0.5	<3	<0.5
W-865-04	18-Nov-04	<0.5	<0.5	<0.5	<0.5	<0.5	<0.5	<0.5	<0.5	<1	<0.5	<0.5	<0.5 L	<0.5	<0.5	<3	<0.5
W-865-04	29-Jan-05	<0.5	<0.5	<0.5	<0.5	<0.5	<0.5	<0.5	<0.5	<0.5	<0.5	<0.5	<0.5	<0.5	<0.5	<0.5	<0.5
W-865-04	13-May-05	<0.5	<0.5	<0.5	<0.5	<0.5	<0.5	<0.5	<0.5	<0.5	<0.5	<0.5	<0.5	<0.5	<0.5	<0.5	<0.5
W-865-04	18-Aug-05	<0.5	<0.5	<0.5	<0.5	<0.5	<0.5	<0.5	<0.5	<0.5	<0.5	<0.5	<0.5	<0.5	<0.5	<0.5	<0.5
W-865-04	6-Oct-05	<0.5	<0.5	<0.5	<0.5	<0.5 L	<0.5	<0.5	<0.5	<0.5	<0.5	<0.5	<0.5 L	<0.5	<0.5	<0.5	<0.5
W-865-04	16-Jan-06	<0.5	<0.5	<0.5	<0.5	<0.5	<0.5	<0.5	<1	<0.5	<0.5	<0.5	<0.5	<0.5	<0.5	<0.5	<0.5

A-10. Ground and surface water analyses for volatile organic compounds (µg/L) in samples collected from the Pit 7 Complex between July 1, 2003 and December 31, 2006.

Location	Sample Date	Carbon tetrachloride (ug/L)	Chloroform (ug/L)	1,1-DCA (ug/L)	1,2-DCA (ug/L)	1,1-DCE (ug/L)	cis-1,2-DCE (ug/L)	trans-1,2-DCE (ug/L)	Total 1,2-DCE (ug/L)	Freon 113 (ug/L)	PCE (ug/L)	1,1,1-TCA (ug/L)	TCE (ug/L)	Freon 11 (ug/L)	Vinyl Chloride (ug/L)	Methylene chloride (ug/L)	1,1,2-TCA (ug/L)
W-865-04	5-Apr-06	<0.5	<0.5	<0.5	<0.5	<0.5	<0.5	<0.5	<1	<0.5	<0.5	<0.5	<0.5	<0.5	<0.5	<0.5	<0.5
W-865-04	30-Aug-06	<0.5	<0.5	<0.5	<0.5	<0.5	<0.5	<0.5	<1	<0.5	<0.5	<0.5	<0.5	<0.5	<0.5	<0.5	<0.5
W-865-04	18-Oct-06	<0.5	<0.5	<0.5	<0.5	<0.5	<0.5	<0.5	<1	<0.5	<0.5	<0.5	<0.5	<0.5	<0.5	<0.5	<0.5
W-865-07	6-Aug-03	<0.5	<0.5	<0.5	<0.5	<0.5	<0.5	<0.5	<0.5	<0.5	<0.5	<0.5	<0.5	<0.5	<0.5	<3	<0.5
W-865-07	2-Dec-03	<0.5	<0.5	<0.5	<0.5	<0.5	<0.5	<0.5	<0.5	<0.5	<0.5	<0.5	<0.5	<0.5	<0.5	<3	<0.5
W-865-07	24-Feb-04	<0.5	<0.5	<0.5	<0.5	<0.5	<0.5	<0.5	<0.5	<0.5	<0.5	<0.5	<0.5	<0.5	<0.5	<3	<0.5
W-865-07	5-May-04	<0.5	<0.5	<0.5	<0.5	<0.5	<0.5	<0.5	<0.5	<0.5	<0.5	<0.5	<0.5 L	<0.5	<0.5	<3	<0.5
W-865-07	5-May-04	<0.5	<0.5	<0.5	<0.5	<0.5	<0.5	<0.5	<0.5	<0.5	<0.5	<0.5	<0.5 L	<0.5	<0.5	<3	<0.5
W-865-07	18-Nov-04	<0.5	<0.5	<0.5	<0.5	<0.5	<0.5	<0.5	<0.5	<1	<0.5	<0.5	<0.5 L	<0.5	<0.5	<3	<0.5
W-865-07	29-Jan-05	<0.5	<0.5	<0.5	<0.5	<0.5	<0.5	<0.5	<0.5	<0.5	<0.5	<0.5	<0.5	<0.5	<0.5	<0.5	<0.5
W-865-07	13-May-05	<0.5	<0.5	<0.5	<0.5	<0.5	<0.5	<0.5	<0.5	<0.5	<0.5	<0.5	<0.5	<0.5	<0.5	<0.5	<0.5
W-865-07	18-Aug-05	<0.5	<0.5	<0.5	<0.5	<0.5	<0.5	<0.5	<0.5	<0.5	<0.5	<0.5	<0.5	<0.5	<0.5	<0.5	<0.5
W-865-07	6-Oct-05	<0.5	<0.5	<0.5	<0.5	<0.5 L	<0.5	<0.5	<0.5	<0.5	<0.5	<0.5	<0.5 L	<0.5	<0.5	<0.5	<0.5
W-865-07	16-Jan-06	<0.5	<0.5	<0.5	<0.5	<0.5	<0.5	<0.5	<1	<0.5	<0.5	<0.5	<0.5	<0.5	<0.5	<0.5	<0.5
W-865-07	5-Apr-06	<0.5	<0.5	<0.5	<0.5	<0.5	<0.5	<0.5	<1	<0.5	<0.5	<0.5	<0.5	<0.5	<0.5	<0.5	<0.5
W-865-07	7-Sep-06	<0.5	<0.5	<0.5	<0.5	<0.5	<0.5	<0.5	<1	<0.5	<0.5	<0.5	<0.5	<0.5	<0.5	<0.5	<0.5
W-865-07	18-Oct-06	<0.5	<0.5	<0.5	<0.5	<0.5	<0.5	<0.5	<1	<0.5	<0.5	<0.5	<0.5	<0.5	<0.5	<0.5	<0.5
W-865-1804	26-Aug-03	<0.5	<0.5	<0.5	<0.5	<0.5 L	<0.5	<0.5	<0.5	<0.5	<0.5	<0.5	<0.5 L	<0.5	<0.5	<3	<0.5
W-865-1804	18-Dec-03	<1	<1	<1	<1	<1 L	<1	<1	<1	<1	<1	<1	<1 L	<1	<1	<3	<1
W-865-1804	4-Mar-04	<1 H	<1 H	<1 H	<1 H	<1 HL	<1 H	<1 H	<1 H	<1 H	<1 H	<1 H	<1 HL	<1 H	<1 H	<3 H	<1 H
W-865-1804	9-Jun-04	<0.5	<0.5	<0.5	<0.5	<0.5	<0.5	<0.5	<0.5	<0.5	<0.5	<0.5	<0.5	<0.5	<0.5	<3	<0.5
W-865-1804	3-Nov-04	<0.5	<0.5	<0.5	<0.5	<0.5	<0.5	<0.5	<0.5		<0.5	<0.5	<0.5 LO	<0.5	<0.5	<3	<0.5
W-865-1804	10-Mar-05	<0.5	<0.5	<0.5	<0.5	<0.5	<0.5	<0.5	<0.5	<0.5	<0.5	<0.5	<0.5	<0.5	<0.5	<0.5	<0.5
W-865-1804	17-May-05	<0.5	<0.5	<0.5	<0.5	<0.5	<0.5	<0.5	<0.5	<0.5	<0.5	<0.5	<0.5	<0.5	<0.5	<0.5	<0.5
W-865-1804	30-Aug-05	<0.5	<0.5	<0.5	<0.5	<0.5	<0.5	<0.5	<1	<0.5	<0.5	<0.5	<0.5	<0.5	<0.5	<0.5	<0.5
W-865-1804	3-Nov-05	<0.5	<0.5	<0.5	<0.5	<0.5	<0.5	<0.5	<1	<0.5	<0.5	<0.5	<0.5	<0.5	<0.5	<0.5	<0.5
W-865-1804	22-Feb-06	<0.5	<0.5	<0.5	<0.5	<0.5	<0.5	<0.5	<1	<0.5	<0.5	<0.5	<0.5	<0.5	<0.5	<0.5	<0.5
W-865-1804	12-Apr-06	<0.5	<0.5	<0.5	<0.5	<0.5	<0.5	<0.5	<1	<0.5	<0.5	<0.5	<0.5	<0.5	<0.5	<0.5	<0.5
W-865-1804	30-Aug-06	<0.5	<0.5	<0.5	<0.5	<0.5	<0.5	<0.5	<1	<0.5	<0.5	<0.5	<0.5	<0.5	<0.5	<0.5	<0.5
W-865-1804	8-Dec-06	<0.5	<0.5	<0.5	<0.5	<0.5	<0.5	<0.5	<1	<0.5	<0.5	<0.5	<0.5 O	<0.5	<0.5	<0.5	<0.5
W-PIT7-03	25-Nov-03	<0.5	<0.5	<0.5	<0.5	<0.5 O	<0.5	<0.5	<0.5	<0.5	<0.5	<0.5	**1**	<0.5	<0.5	<3	<0.5
W-PIT7-03	10-May-04	<0.5	<0.5	<0.5	<0.5	<0.5	<0.5	<0.5	<0.5	<0.5	<0.5	<0.5	<0.5	<0.5	<0.5	<3	<0.5
W-PIT7-03	1-Dec-04	<0.5	<0.5	<0.5	<0.5	<0.5	<0.5	<0.5	<0.5	<1	<0.5	<0.5	**0.8**	<0.5	<0.5	<3	<0.5
W-PIT7-03	10-Oct-05	<0.5	<0.5	<0.5	<0.5	<0.5	<0.5	<0.5	<1	<0.5	<0.5	<0.5	**0.7**	<0.5 E	<0.5	<0.5	<0.5
W-PIT7-03	24-May-06	<0.5	<0.5 L	<0.5	<0.5	<0.5 L	<0.5	<0.5	<1	<0.5	<0.5	<0.5	**1.5 L**	**0.6**	<0.5	<0.5	<0.5
W-PIT7-03	5-Dec-06	<0.5	<0.5	<0.5	<0.5	<0.5	<0.5	<0.5	<1	<0.5	<0.5	<0.5	**0.8**	<0.5	<0.5	<1	<0.5
W-PIT7-03	5-Dec-06	<0.5	<0.5	<0.5	<0.5	<0.5	<0.5	<0.5	<1	<0.5	<0.5	<0.5	<0.5	<0.5	<0.5	<0.5	<0.5
W-PIT7-11	16-Dec-03	<5 D	<5 D	<5 D	<5 D	<5 DL	<5 D	<5 D	<5 D	<5 D	<5 D	<5 D	<5 DL	<5 D	<5 D	<15 D	<5 D

A-10. Ground and surface water analyses for volatile organic compounds (µg/L) in samples collected from the Pit 7 Complex between July 1, 2003 and December 31, 2006.

Location	Sample Date	Carbon tetrachloride (ug/L)	Chloroform (ug/L)	1,1-DCA (ug/L)	1,2-DCA (ug/L)	1,1-DCE (ug/L)	cis-1,2-DCE (ug/L)	trans-1,2-DCE (ug/L)	Total 1,2-DCE (ug/L)	Freon 113 (ug/L)	PCE (ug/L)	1,1,1-TCA (ug/L)	TCE (ug/L)	Freon 11 (ug/L)	Vinyl Chloride (ug/L)	Methylene chloride (ug/L)	1,1,2-TCA (ug/L)
W-PIT7-13	29-Aug-03	<0.5	<0.5	<0.5	<0.5	<0.5 L	<0.5	<0.5	<0.5	<0.5	<0.5	<0.5	<0.5 L	<0.5	<0.5	<3	<0.5
W-PIT7-13	3-Dec-03	<0.5	<0.5	<0.5	<0.5	<0.5	<0.5	<0.5	<0.5	<0.5	<0.5	<0.5	<0.5	<0.5	<0.5	<3	<0.5
W-PIT7-13	9-Mar-04	<0.5	<0.5	<0.5	<0.5	<0.5 L	<0.5	<0.5	<0.5	<0.5	<0.5	<0.5	<0.5 L	<0.5	<0.5	<3	<0.5
W-PIT7-14	18-Dec-03	<1	<1	<1	<1	<1 L	<1	<1	<1	<1	<1	<1	<1 L	<1	<1	<3	<1
W-PIT7-14	9-Mar-04	<1	<1	<1	<1	<1	<1	<1	<1	<1	<1	<1	<1	<1	<1	<3	<1
W-PIT7-15	29-Aug-03	<0.5	<0.5	<0.5	<0.5	<0.5 L	<0.5	<0.5	<0.5	<0.5	<0.5	<0.5	<0.5 L	<0.5	<0.5	<3	<0.5
W-PIT7-15	4-Dec-03	<0.5	<0.5	<0.5	<0.5	<0.5	<0.5	<0.5	<1	<0.5	<0.5	<0.5	<0.5	<0.5	<0.5	<1	<0.5
W-PIT7-15	3-Mar-04	<0.5	<0.5	<0.5	<0.5	<0.5	<0.5	<0.5	<0.5	<0.5	<0.5	<0.5	<0.5	<0.5	<0.5	<3	<0.5
W-PIT7-16	29-Aug-03	<0.5	<0.5	<0.5	<0.5	<0.5 L	<0.5	<0.5	<0.5	<0.5	<0.5	<0.5	<0.5 L	<0.5	<0.5	<3	<0.5
W-PIT7-16	17-Oct-03	<0.5	<0.5	<0.5	<0.5	<0.5	<0.5	<0.5	<0.5	<0.5	<0.5	<0.5	<0.5	<0.5	<0.5	<3	<0.5
W-PIT7-16	9-Mar-04	<0.5	<0.5	<0.5	<0.5	<0.5 L	<0.5	<0.5	<0.5	<0.5	<0.5	<0.5	<0.5 L	<0.5	<0.5	<3	<0.5
W-PIT7-1860	7-Mar-05	<0.5 H	<0.5 H	<0.5 H	<0.5 H	<0.5 H	<0.5 H	<0.5 H		<1 H	<0.5 H	<0.5 H	<0.5 H	<0.5 H	<0.5 H	<3 H	<0.5 H
W-PIT7-1860	15-Jun-05	<0.5	<0.5	<0.5	<0.5	<0.5	<0.5	<0.5	<0.5	<1	<0.5	<0.5	<0.5	<0.5	<0.5	<3	<0.5
W-PIT7-1860	17-Aug-05	<0.5	<0.5	<0.5	<0.5	<0.5	<0.5	<0.5	<1	<0.5	<0.5	<0.5	<0.5	<0.5	<0.5	<0.5	<0.5
W-PIT7-1860	31-Oct-05	<0.5	<0.5	<0.5	<0.5	<0.5	<0.5	<0.5	<1	<0.5	<0.5	<0.5	<0.5	<0.5	<0.5	<0.5	<0.5
W-PIT7-1861	7-Mar-05	<0.5 H	<0.5 H	<0.5 H	<0.5 H	<0.5 H	<0.5 H	<0.5 H		<1 H	<0.5 H	<0.5 H	<0.5 H	<0.5 H	<0.5 H	<3 H	<0.5 H
W-PIT7-1861	15-Jun-05	<0.5	<0.5	<0.5	<0.5	<0.5	<0.5	<0.5	<0.5	<1	<0.5	<0.5	<0.5	<0.5	<0.5	<3	<0.5
W-PIT7-1861	17-Aug-05	<0.5	<0.5	<0.5	<0.5	<0.5	<0.5	<0.5	<1	<0.5	<0.5	<0.5	<0.5	<0.5	<0.5	<0.5	<0.5
W-PIT7-1861	31-Oct-05	<0.5	<0.5	<0.5	<0.5	<0.5	<0.5	<0.5	<1	<0.5	<0.5	<0.5	<0.5	<0.5	<0.5	<0.5	<0.5
W-PIT7-2141	16-Nov-05	<0.5	<0.5	<0.5	<0.5	<0.5	<0.5	<0.5	<1	<0.5	<0.5	<0.5	<0.5	<0.5	<0.5	<0.5	<0.5

Notes:

µg/L = Micrograms per liter.
B = Analyte found in method blank
D = Analysis performed at a secondary dilution or concentration (i.e., vapor samples)
E = The analyte was detected below LLNL reporting limit, but above analytical laboratory minimum detection limit
F = Analyte found in field blank, trip blank, or equipment blank
H = Sample analyzed outside of holding time, sample results should be evaluated
J = Analyte was postively identified; the associated numerical value is approximate concentration of the analyte
L = Spike accuracy not within control limits
O = Duplicate spike or sample precision not within control limits

Table A-11. Ground and surface water analyses for aromatic hydrocarbons compounds (µg/L) in samples collected from the Pit 7 Complex between July 1, 2003 and December 31, 2006.

Location	Sample Date	Benzene ug/L	Toluene ug/L	Ethyl-benzene ug/L	Total xylenes ug/L	1,2 Dichloro-benzene ug/L	1,3 Dichloro-benzene ug/L	1,4 Dichloro-benzene ug/L	Chloro-benzene ug/L
K7-01	9-Sep-03					<0.5	<0.5	<0.5	<0.5
K7-01	2-Dec-03					<0.5	<0.5	<0.5	<0.5
K7-01	21-Jan-04	<0.5	<0.5	<0.5	<1	<0.5	<0.5	<0.5	<0.5
K7-01	21-Jan-04	<0.5	<0.5	<0.5	<1	<0.5	<0.5	<0.5	<0.5
K7-01	28-Apr-04					<0.5	<0.5	<0.5	<0.5
K7-01	4-Aug-04					<0.5	<0.5	<0.5	<0.5
K7-01	2-Nov-04	<0.5	<0.5	<0.5	<1	<0.5	<0.5	<0.5	<0.5
K7-01	24-Jan-05	<0.5	<0.5	<0.5	<1	<0.5	<0.5	<0.5	<0.5
K7-01	24-Jan-05	<0.5	<0.5	<0.5	<1	<0.5	<0.5	<0.5	<0.5
K7-01	5-Apr-05	<0.5	<0.5	<0.5	<1	<0.5	<0.5	<0.5	<0.5
K7-01	11-Jul-05	<0.5	<0.5	<0.5	<1	<0.5	<0.5	<0.5	<0.5
K7-01	24-Oct-05	<0.5	<0.5	<0.5	<1	<0.5	<0.5	<0.5	<0.5
K7-01	3-Jan-06	<1	<1	<1	<2	<1	<1	<1	<1
K7-01	3-Jan-06	<1	<1	<1	<2	<1	<1	<1	<1
K7-01	13-Apr-06	<1	<1	<1	<2	<1	<1	<1	<1
K7-01	5-Jul-06	<1	<1	<1	<2	<1	<1	<1	<1
K7-01	9-Oct-06	<1	<1	<1	<2	<1	<1	<1	<1
K7-03	17-Sep-03					<0.5	<0.5	<0.5	<0.5
K7-03	9-Dec-03					<0.5	<0.5	<0.5	<0.5
K7-03	21-Jan-04	<0.5	<0.5	<0.5	<1	<0.5	<0.5	<0.5	<0.5
K7-03	20-Apr-04					<0.5	<0.5	<0.5	<0.5
K7-03	10-Aug-04					<0.5	<0.5	<0.5	<0.5
K7-03	29-Oct-04	<0.5	<0.5	<0.5	<1	<0.5	<0.5	<0.5	<0.5
K7-03	25-Jan-05	<0.5	<0.5	<0.5	<1	<0.5	<0.5	<0.5	<0.5
K7-03	14-Apr-05	<0.5	<0.5	<0.5	<1	<0.5	<0.5	<0.5	<0.5
K7-03	14-Apr-05	<0.5	<0.5	<0.5	<1	<0.5	<0.5	<0.5	<0.5
K7-03	17-May-05					<0.5	<0.5	<0.5	<0.5
K7-03	17-May-05					<0.5	<0.5	<0.5	<0.5
K7-03	12-Jul-05	<0.5	<0.5 E	<0.5 E	1.7	<0.5	<0.5	<0.5	<0.5
K7-03	27-Oct-05	<0.5	<0.5	<0.5	<1	<0.5	<0.5	<0.5	<0.5
K7-03	27-Oct-05	<0.5	<0.5	<0.5	<1	<0.5	<0.5	<0.5	<0.5
K7-03	5-Jan-06	<1	<1 E	<1	<2 E	<1	<1	<1	<1
K7-03	24-Apr-06	<1	1.3	<1 E	<2 E	<1	<1	<1	<1
K7-03	24-Apr-06	<1	1.2	<1 E	<2 E	<1	<1	<1 E	<1
K7-03	6-Jul-06	<1	<1	<1	<2	<1	<1	<1	<1
K7-03	4-Oct-06	<1	1.2	<1 E	<2 E	<1	<1	<1	<1 E
K7-06	5-Aug-03					<0.5	<0.5	<0.5	<0.5
K7-06	4-Dec-03					<0.5	<0.5	<0.5	<0.5
K7-06	27-Jan-04	<0.5	<0.5	<0.5	<1	<0.5	<0.5	<0.5	<0.5
K7-06	2-Jun-04					<0.5	<0.5	<0.5	<0.5
K7-06	2-Jun-04					<0.5	<0.5	<0.5	<0.5
K7-06	18-Aug-04					<0.5	<0.5	<0.5	<0.5
K7-06	4-Nov-04	<0.5	<0.5	<0.5	<1	<0.5	<0.5	<0.5	<0.5
K7-06	4-Nov-04	<0.5	<0.5	<0.5	<1	<0.5	<0.5	<0.5	<0.5
K7-06	1-Feb-05	<0.5	<0.5	<0.5	<1	<0.5	<0.5	<0.5	<0.5
K7-06	5-Apr-05	<0.5	<0.5	<0.5	<1	<0.5	<0.5	<0.5	<0.5

Table A-11. Ground and surface water analyses for aromatic hydrocarbons compounds (µg/L) in samples collected from the Pit 7 Complex between July 1, 2003 and December 31, 2006.

Location	Sample Date	Benzene ug/L	Toluene ug/L	Ethyl-benzene ug/L	Total xylenes ug/L	1,2 Dichloro-benzene ug/L	1,3 Dichloro-benzene ug/L	1,4 Dichloro-benzene ug/L	Chloro-benzene ug/L
K7-06	3-Aug-05	<0.5	<0.5	<0.5	<1	<0.5	<0.5	<0.5	<0.5
K7-06	31-Oct-05	<0.5	<0.5	<0.5	<1	<0.5	<0.5	<0.5	<0.5
K7-06	13-Jan-06	<1	<1	<1	<2	<1	<1	<1	<1
K7-06	25-Apr-06	<1	<1	<1	<2	<1	<1	<1	<1
K7-06	5-Jul-06	<1	<1	<1	<2	<1	<1	<1	<1
K7-06	2-Oct-06	<1	<1	<1	<2	<1	<1	<1	<1
K7-09	9-Sep-03					<0.5	<0.5	<0.5	<0.5
K7-09	9-Sep-03					<0.5	<0.5	<0.5	<0.5
K7-09	3-Dec-03					<0.5	<0.5	<0.5	<0.5
K7-09	26-Jan-04	<0.5	<0.5	<0.5	<1	<0.5	<0.5	<0.5	<0.5
K7-09	3-May-04					<0.5	<0.5	<0.5	<0.5
K7-09	17-Aug-04					<0.5	<0.5	<0.5	<0.5
K7-09	4-Nov-04	<0.5	<0.5	<0.5	<1	<0.5	<0.5	<0.5	<0.5
K7-09	24-Feb-05	<0.5	<0.5	<0.5	<1	<0.5	<0.5	<0.5	<0.5
K7-09	4-Apr-05	<0.5	<0.5	<0.5	<1	<0.5	<0.5	<0.5	<0.5
K7-09	2-Aug-05	<0.5	<0.5	<0.5	<1	<0.5	<0.5	<0.5	<0.5
K7-09	1-Nov-05	<0.5	<0.5	<0.5	<1	<0.5	<0.5	<0.5	<0.5
K7-09	4-Jan-06	<1	<1	<1	<2	<1	<1	<1	<1
K7-09	2-May-06	<1	<1	<1	<2	<1	<1	<1	<1
K7-09	17-Jul-06	<1	<1	<1	<2	<1	<1	<1	<1
K7-09	17-Jul-06	<1	<1	<1	<2	<1	<1	<1	<1
K7-09	4-Oct-06	<1	<1	<1	<2	<1	<1	<1	<1
K7-10	31-Jul-03					<0.5	<0.5	<0.5	<0.5
K7-10	4-Dec-03					<0.5	<0.5	<0.5	<0.5
K7-10	27-Jan-04	<0.5	<0.5	<0.5	<1	<0.5	<0.5	<0.5	<0.5
K7-10	3-May-04					<0.5	<0.5	<0.5	<0.5
K7-10	17-Aug-04					<0.5	<0.5	<0.5	<0.5
K7-10	23-Nov-04	<0.5	<0.5	<0.5	<1	<0.5	<0.5	<0.5	<0.5
K7-10	3-Feb-05	<0.5	<0.5 E	<0.5	<1	<0.5	<0.5	<0.5	<0.5
K7-10	4-Apr-05	<0.5	<0.5 E	<0.5	<1	<0.5	<0.5	<0.5	<0.5
K7-10	2-Aug-05	<0.5	<0.5	<0.5	<1	<0.5	<0.5	<0.5	<0.5
K7-10	1-Nov-05	<0.5	<0.5	<0.5	<1	<0.5	<0.5	<0.5	<0.5
K7-10	4-Jan-06	<1	<1	<1	<2	<1	<1	<1	<1
K7-10	2-May-06	<1	<1	<1	<2	<1	<1	<1	<1
K7-10	17-Jul-06	<1	<1	<1	<2	<1	<1	<1	<1
K7-10	2-Oct-06	<1	<1	<1	<2	<1	<1	<1	<1
K7-10	2-Oct-06	<1	<1	<1	<2	<1	<1	<1	<1
MUL2	21-Aug-03					<2 D	<2 D	<2 D	
MUL2	21-Aug-03	<0.2	<0.2	<0.2	<0.44	<0.2	<0.2	<0.2	<0.21
MUL2	28-Jul-04					<2	<2	<2	
MUL2	28-Jul-04	<0.2	<0.2	<0.2	<0.4	<0.2	<0.2	<0.2	<0.2
MUL2	2-Aug-05	<0.5	<0.5	<0.5	<1	<0.5	<0.5	<0.5	<0.5
MUL2	2-Aug-05					<5 D	<5 D	<5 D	
MUL2	25-Jan-06	<0.5	<0.5	<0.5	<1	<0.5	<0.5	<0.5	<0.5
MUL2	25-Jan-06					<5	<5	<5	
MUL2	8-Aug-06	<0.5	<0.5	<0.5	<1	<0.5	<0.5	<0.5	<0.5

Table A-11. Ground and surface water analyses for aromatic hydrocarbons compounds (µg/L) in samples collected from the Pit 7 Complex between July 1, 2003 and December 31, 2006.

Location	Sample Date	Benzene ug/L	Toluene ug/L	Ethyl-benzene ug/L	Total xylenes ug/L	1,2 Dichloro-benzene ug/L	1,3 Dichloro-benzene ug/L	1,4 Dichloro-benzene ug/L	Chloro-benzene ug/L
NC7-12	4-Aug-05					<0.5	<0.5	<0.5	<0.5
NC7-12	16-Aug-06					<0.5	<0.5	<0.5	<0.5
NC7-16	15-Nov-05					<0.5	<0.5	<0.5	<0.5
NC7-16	15-Nov-05					<0.5	<0.5	<0.5	<0.5
NC7-16	17-Oct-06					<0.5	<0.5	<0.5	<0.5
NC7-21	29-Nov-04					<0.5	<0.5	<0.5	<0.5
NC7-21	30-Nov-05					<0.5	<0.5	<0.5	<0.5
NC7-21	18-Oct-06					<0.5	<0.5	<0.5	<0.5
NC7-25	31-Jul-03					<0.5	<0.5	<0.5	<0.5
NC7-25	5-Dec-03					<0.5	<0.5	<0.5	<0.5
NC7-25	4-Mar-04	<0.5	<0.5	<0.5	<1	<0.5	<0.5	<0.5	<0.5
NC7-25	29-Apr-04					<0.5	<0.5	<0.5	<0.5
NC7-25	22-Jul-04					<0.5	<0.5	<0.5	<0.5
NC7-25	29-Oct-04	<0.5	<0.5	<0.5	<1	<0.5	<0.5	<0.5	<0.5
NC7-25	25-Jan-05	<0.5	<0.5	<0.5	<1	<0.5	<0.5	<0.5	<0.5
NC7-25	6-Apr-05	<0.5	<0.5	<0.5	<1	<0.5	<0.5	<0.5	<0.5
NC7-25	12-Jul-05	<0.5	<0.5	<0.5	<1	<0.5	<0.5	<0.5	<0.5
NC7-25	26-Oct-05	<0.5	<0.5	<0.5	<1	<0.5	<0.5	<0.5	<0.5
NC7-25	5-Jan-06	<1	<1	<1	<2	<1	<1	<1	<1
NC7-25	24-Apr-06	<1	<1	<1	<2	<1	<1	<1	<1
NC7-25	10-Jul-06	<1	<1	<1	<2	<1	<1	<1	<1
NC7-25	4-Oct-06	<1	<1	<1	<2	<1	<1	<1	<1
NC7-26	12-Sep-03					<0.5	<0.5	<0.5	<0.5
NC7-26	8-Dec-03					<0.5	<0.5	<0.5	<0.5
NC7-26	27-Jan-04	<0.5	<0.5	<0.5	<1	<0.5	<0.5	<0.5	<0.5
NC7-26	29-Apr-04					<0.5	<0.5	<0.5	<0.5
NC7-26	5-Aug-04					<0.5	<0.5	<0.5	<0.5
NC7-26	2-Nov-04	<0.5	<0.5	<0.5	<1	<0.5	<0.5	<0.5	<0.5
NC7-26	27-Jan-05	<0.5	<0.5	<0.5	<1	<0.5	<0.5	<0.5	<0.5
NC7-26	6-Apr-05	<0.5	<0.5	<0.5	<1	<0.5	<0.5	<0.5	<0.5
NC7-26	12-Jul-05	<0.5	<0.5	<0.5	<1	<0.5	<0.5	<0.5	<0.5
NC7-26	20-Oct-05	<0.5	<0.5	<0.5	<1	<0.5	<0.5	<0.5	<0.5
NC7-26	10-Jan-06	<1	<1	<1	<2	<1	<1	<1	<1
NC7-26	27-Apr-06	<1	<1	<1	<2	<1	<1	<1	<1
NC7-26	10-Jul-06	<1	<1	<1	<2	<1	<1	<1	<1
NC7-26	2-Oct-06	<1	<1	<1	<2	<1	<1	<1	<1
NC7-34	4-Dec-03					<0.5	<0.5	<0.5	<0.5
NC7-34	29-Nov-04					<0.5	<0.5	<0.5	<0.5
NC7-34	22-Nov-05					<0.5	<0.5	<0.5	<0.5
NC7-34	22-Nov-05					<0.5	<0.5	<0.5	<0.5
NC7-34	1-Dec-06					<0.5	<0.5	<0.5	<0.5
NC7-36	16-Dec-03					<0.5	<0.5	<0.5	<0.5 L
NC7-36	6-Dec-04					<0.5	<0.5	<0.5	<0.5
NC7-36	6-Dec-04					<0.5	<0.5	<0.5	<0.5 L
NC7-36	6-Dec-04					<0.5	<0.5	<0.5	<0.5 L
NC7-36	22-Nov-05					<0.5	<0.5	<0.5	<0.5

Table A-11. Ground and surface water analyses for aromatic hydrocarbons compounds (µg/L) in samples collected from the Pit 7 Complex between July 1, 2003 and December 31, 2006.

Location	Sample Date	Benzene ug/L	Toluene ug/L	Ethyl-benzene ug/L	Total xylenes ug/L	1,2 Dichloro-benzene ug/L	1,3 Dichloro-benzene ug/L	1,4 Dichloro-benzene ug/L	Chloro-benzene ug/L
NC7-36	1-Dec-06					<0.5	<0.5	<0.5	<0.5
NC7-37	10-Oct-05					<0.5	<0.5	<0.5	<0.5
NC7-37	28-Nov-06					<0.5	<0.5	<0.5	<0.5
NC7-40	31-Oct-03					<0.5	<0.5	<0.5	<0.5 L
NC7-40	30-Nov-04					<0.5	<0.5	<0.5	<0.5 L
NC7-40	11-Oct-05					<0.5	<0.5	<0.5	<0.5
NC7-40	18-Oct-06					<0.5	<0.5	<0.5	<0.5
NC7-40	18-Oct-06					<0.5	<0.5	<0.5	<0.5
NC7-47	5-Aug-03					<0.5	<0.5	<0.5	<0.5
NC7-47	5-Dec-03					<0.5	<0.5	<0.5	<0.5
NC7-47	8-Mar-04	<0.5	<0.5	<0.5	<1	<0.5	<0.5	<0.5	<0.5
NC7-47	26-Apr-04					<0.5	<0.5	<0.5	<0.5
NC7-47	29-Jul-04					<0.5	<0.5	<0.5	<0.5
NC7-47	29-Jul-04					<0.5	<0.5	<0.5	<0.5
NC7-47	28-Oct-04	<0.5	<0.5	<0.5	<1	<0.5	<0.5	<0.5	<0.5
NC7-47	26-Jan-05	<0.5	<0.5	<0.5	<1	<0.5	<0.5	<0.5	<0.5
NC7-47	26-Apr-05	<0.5	<0.5	<0.5	<1	<0.5	<0.5	<0.5	<0.5
NC7-47	5-Jul-05					<0.5	<0.5	<0.5	<0.5
NC7-47	5-Jul-05					<0.5	<0.5	<0.5	<0.5
NC7-47	19-Oct-05	<0.5	<0.5	<0.5	<1	<0.5	<0.5	<0.5	<0.5
NC7-47	19-Jan-06	<1	<1	<1	<2	<1	<1	<1	<1
NC7-47	4-Apr-06	<1	<1	<1	<2	<1	<1	<1	<1
NC7-47	6-Jul-06	<1	<1	<1	<2	<1	<1	<1	<1
NC7-47	3-Oct-06	<1	<1	<1	<2	<1	<1	<1	<1
NC7-48	5-Aug-03					<0.5	<0.5	<0.5	<0.5
NC7-48	9-Dec-03					<0.5	<0.5	<0.5	<0.5
NC7-48	9-Dec-03					<0.5	<0.5	<0.5	<0.5
NC7-48	9-Mar-04	<0.5	<0.5	<0.5	<1	<0.5	<0.5	<0.5	<0.5
NC7-48	28-Apr-04					<0.5	<0.5	<0.5	<0.5
NC7-48	10-Aug-04					<0.5	<0.5	<0.5	<0.5
NC7-48	2-Nov-04	<0.5	<0.5	<0.5	<1	<0.5	<0.5	<0.5	<0.5
NC7-48	3-Feb-05	<0.5	<0.5	<0.5	<1	<0.5	<0.5	<0.5	<0.5
NC7-48	6-Apr-05	<0.5	<0.5	<0.5	<1	<0.5	<0.5	<0.5	<0.5
NC7-48	11-Jul-05	<0.5	<0.5	<0.5	<1	<0.5	<0.5	<0.5	<0.5
NC7-48	20-Oct-05	<0.5	<0.5	<0.5	<1	<0.5	<0.5	<0.5	<0.5
NC7-48	13-Jan-06	<1	<1	<1	<2	<1	<1	<1	<1
NC7-48	25-Apr-06	<1	<1	<1	<2	<1	<1	<1	<1
NC7-48	6-Jul-06	<1	<1	<1	<2	<1	<1	<1	<1
NC7-48	2-Oct-06	<1	<1	<1	<2	<1	<1	<1	<1
NC7-50	31-Jul-03					<0.5	<0.5	<0.5	<0.5
NC7-50	11-Nov-03					<0.5	<0.5	<0.5	<0.5
NC7-50	1-Mar-04					<0.5	<0.5	<0.5	<0.5
NC7-50	1-Mar-04					<0.5	<0.5	<0.5	<0.5
NC7-51	16-Oct-03					<0.5	<0.5	<0.5	<0.5
NC7-51	1-Nov-04					<0.5	<0.5	<0.5	<0.5
NC7-51	20-Nov-04					<0.5 L	<0.5 L	<0.5 L	<0.5 L

Table A-11. Ground and surface water analyses for aromatic hydrocarbons compounds (µg/L) in samples collected from the Pit 7 Complex between July 1, 2003 and December 31, 2006.

Location	Sample Date	Benzene ug/L	Toluene ug/L	Ethyl-benzene ug/L	Total xylenes ug/L	1,2 Dichloro-benzene ug/L	1,3 Dichloro-benzene ug/L	1,4 Dichloro-benzene ug/L	Chloro-benzene ug/L
NC7-51	10-Oct-05					<0.5	<0.5	<0.5	<0.5
NC7-51	5-Dec-06					<0.5	<0.5	<0.5	<0.5
NC7-51	5-Dec-06					<0.5	<0.5	<0.5	<0.5
NC7-52	11-Nov-03					<0.5	<0.5	<0.5	<0.5
NC7-67	13-Nov-03					<1	<1	<1	<1 L
NC7-67	19-Nov-04					<0.5	<0.5	<0.5	<0.5 L
NC7-67	11-Oct-05					<0.5	<0.5	<0.5	<0.5
NC7-67	30-Nov-06					<0.5	<0.5	<0.5	<0.5
SPRING13	20-Dec-04					<0.5	<0.5	<0.5	<0.5
SPRING13	7-Dec-05					<0.5	<0.5	<0.5	<0.5
W-865-01	6-Aug-03					<0.5	<0.5	<0.5	<0.5
W-865-01	17-Nov-03					<0.5	<0.5	<0.5	<0.5
W-865-01	3-Mar-04					<0.5	<0.5	<0.5	<0.5
W-865-01	5-May-04					<0.5	<0.5	<0.5	<0.5
W-865-01	5-May-04	<0.5	<0.5	<0.5	<0.5	<0.3	<0.3	<0.3	<0.3
W-865-01	3-Nov-04					<0.5	<0.5	<0.5	<0.5
W-865-01	29-Jan-05					<0.5	<0.5	<0.5	<0.5
W-865-01	17-May-05					<0.5	<0.5	<0.5	<0.5
W-865-01	24-Aug-05					<0.5	<0.5	<0.5	<0.5
W-865-01	19-Oct-05					<0.5	<0.5	<0.5	<0.5
W-865-01	16-Jan-06					<0.5	<0.5	<0.5	<0.5
W-865-01	11-Apr-06					<0.5	<0.5	<0.5	<0.5
W-865-01	30-Aug-06					<0.5	<0.5	<0.5	<0.5
W-865-01	14-Dec-06					<0.5	<0.5	<0.5	<0.5
W-865-03	6-Aug-03					<0.5	<0.5	<0.5	<0.5
W-865-03	17-Nov-03					<0.5	<0.5	<0.5	<0.5
W-865-03	3-Mar-04					<0.5	<0.5	<0.5	<0.5
W-865-03	5-May-04					<0.5	<0.5	<0.5	<0.5
W-865-03	5-May-04	<0.5	<0.5	<0.5	<0.5	<0.3	<0.3	<0.3	<0.3
W-865-03	2-Nov-04					<0.5 LO	<0.5 LO	<0.5 LO	<0.5 LO
W-865-03	29-Jan-05					<0.5	<0.5	<0.5	<0.5
W-865-03	20-May-05					<0.5	<0.5	<0.5	<0.5
W-865-03	24-Aug-05					<0.5	<0.5	<0.5	<0.5
W-865-03	19-Oct-05					<0.5	<0.5	<0.5	<0.5
W-865-03	16-Jan-06					<0.5	<0.5	<0.5	<0.5
W-865-03	11-Apr-06					<0.5	<0.5	<0.5	<0.5
W-865-03	31-Aug-06					<0.5	<0.5	<0.5	<0.5
W-865-03	19-Dec-06					<0.5	<0.5	<0.5	<0.5
W-865-04	6-Aug-03					<0.5	<0.5	<0.5	<0.5
W-865-04	17-Nov-03					<0.5	<0.5	<0.5	<0.5
W-865-04	24-Feb-04					<0.5	<0.5	<0.5	<0.5
W-865-04	5-May-04					<0.5	<0.5	<0.5	<0.5
W-865-04	5-May-04	<0.5	<0.5	<0.5	<0.5	<0.3	<0.3	<0.3	<0.3
W-865-04	5-May-04					<0.5	<0.5	<0.5	<0.5
W-865-04	5-May-04	<0.5	<0.5	<0.5	<0.5	<0.3	<0.3	<0.3	<0.3
W-865-04	18-Nov-04					<0.5	<0.5	<0.5	<0.5 L

Table A-11. Ground and surface water analyses for aromatic hydrocarbons compounds (µg/L) in samples collected from the Pit 7 Complex between July 1, 2003 and December 31, 2006.

Location	Sample Date	Benzene ug/L	Toluene ug/L	Ethyl-benzene ug/L	Total xylenes ug/L	1,2 Dichloro-benzene ug/L	1,3 Dichloro-benzene ug/L	1,4 Dichloro-benzene ug/L	Chloro-benzene ug/L
W-865-04	29-Jan-05					<0.5	<0.5	<0.5	<0.5
W-865-04	13-May-05					<0.5	<0.5	<0.5	<0.5
W-865-04	18-Aug-05					<0.5	<0.5	<0.5	<0.5
W-865-04	6-Oct-05					<0.5	<0.5	<0.5	<0.5
W-865-04	16-Jan-06					<0.5	<0.5	<0.5	<0.5
W-865-04	5-Apr-06					<0.5	<0.5	<0.5	<0.5
W-865-04	30-Aug-06					<0.5	<0.5	<0.5	<0.5
W-865-04	18-Oct-06					<0.5	<0.5	<0.5	<0.5
W-865-07	6-Aug-03					<0.5	<0.5	<0.5	<0.5
W-865-07	2-Dec-03					<0.5	<0.5	<0.5	<0.5
W-865-07	24-Feb-04					<0.5	<0.5	<0.5	<0.5
W-865-07	5-May-04					<0.5	<0.5	<0.5	<0.5
W-865-07	5-May-04	<0.5	<0.5	<0.5	<0.5	<0.3	<0.3	<0.3	<0.3
W-865-07	5-May-04					<0.5	<0.5	<0.5	<0.5
W-865-07	5-May-04	<0.5	<0.5	<0.5	<0.5	<0.3	<0.3	<0.3	<0.3
W-865-07	18-Nov-04					<0.5	<0.5	<0.5	<0.5 L
W-865-07	29-Jan-05					<0.5	<0.5	<0.5	<0.5
W-865-07	13-May-05					<0.5	<0.5	<0.5	<0.5
W-865-07	18-Aug-05					<0.5	<0.5	<0.5	<0.5
W-865-07	6-Oct-05					<0.5	<0.5	<0.5	<0.5
W-865-07	16-Jan-06					<0.5	<0.5	<0.5	<0.5
W-865-07	5-Apr-06					<0.5	<0.5	<0.5	<0.5
W-865-07	7-Sep-06					<0.5	<0.5	<0.5	<0.5
W-865-07	18-Oct-06					<0.5	<0.5	<0.5	<0.5
W-865-1804	26-Aug-03					<0.5	<0.5	<0.5	<0.5 L
W-865-1804	18-Dec-03	<1 L	<1	<1	<1	<1	<1	<1	<1 L
W-865-1804	4-Mar-04	<1 HL	<1 HL	<1 H	<1 H	<1 H	<1 H	<1 H	<1 HL
W-865-1804	9-Jun-04					<0.5	<0.5	<0.5	<0.5
W-865-1804	9-Jun-04	<0.5	<0.5	<0.5	<0.5	<0.3	<0.3	<0.3	<0.3
W-865-1804	3-Nov-04					<0.5	<0.5	<0.5	<0.5
W-865-1804	10-Mar-05					<0.5	<0.5	<0.5	<0.5 L
W-865-1804	17-May-05					<0.5	<0.5	<0.5	<0.5
W-865-1804	30-Aug-05					<0.5	<0.5	<0.5	<0.5
W-865-1804	3-Nov-05					<0.5	<0.5	<0.5	<0.5
W-865-1804	22-Feb-06					<0.5	<0.5	<0.5	<0.5
W-865-1804	12-Apr-06					<0.5	<0.5	<0.5	<0.5
W-865-1804	30-Aug-06					<0.5	<0.5	<0.5	<0.5
W-865-1804	8-Dec-06					<0.5	<0.5	<0.5	<0.5
W-PIT7-03	25-Nov-03					<0.5	<0.5	<0.5	<0.5 O
W-PIT7-03	10-May-04					<0.5	<0.5	<0.5	<0.5
W-PIT7-03	1-Dec-04					<0.5	<0.5	<0.5	<0.5
W-PIT7-03	10-Oct-05					<0.5	<0.5	<0.5	<0.5
W-PIT7-03	24-May-06					<0.5	<0.5	<0.5	<0.5
W-PIT7-03	5-Dec-06					<0.5	<0.5	<0.5	<0.5
W-PIT7-03	5-Dec-06					<0.5	<0.5	<0.5	<0.5
W-PIT7-11	16-Dec-03	<5 DL	<5 DL	<5 D	<5 D	<5 D	<5 D	<5 D	<5 DL

Table A-11. Ground and surface water analyses for aromatic hydrocarbons compounds (µg/L) in samples collected from the Pit 7 Complex between July 1, 2003 and December 31, 2006.

Location	Sample Date	Benzene ug/L	Toluene ug/L	Ethyl-benzene ug/L	Total xylenes ug/L	1,2 Dichloro-benzene ug/L	1,3 Dichloro-benzene ug/L	1,4 Dichloro-benzene ug/L	Chloro-benzene ug/L
W-PIT7-13	29-Aug-03					<0.5	<0.5	<0.5	<0.5 L
W-PIT7-13	3-Dec-03					<0.5	<0.5	<0.5	<0.5
W-PIT7-13	9-Mar-04					<0.5	<0.5	<0.5	<0.5 L
W-PIT7-14	18-Dec-03	<1 L	<1	<1	<1	<1	<1	<1	<1 L
W-PIT7-14	9-Mar-04	<1	<1	<1	<1	<1	<1	<1	<1
W-PIT7-15	29-Aug-03					<0.5	<0.5	<0.5	<0.5 L
W-PIT7-15	4-Dec-03					<0.5	<0.5	<0.5	<0.5
W-PIT7-15	3-Mar-04					<0.5	<0.5	<0.5	<0.5
W-PIT7-16	29-Aug-03					<0.5	<0.5	<0.5	<0.5 L
W-PIT7-16	17-Oct-03					<0.5	<0.5	<0.5	<0.5
W-PIT7-16	9-Mar-04					<0.5	<0.5	<0.5	<0.5 L
W-PIT7-1860	7-Mar-05	<1 H	<1 H	<1 H	<2 H	<0.5 H	<0.5 H	<0.5 H	<0.5 H
W-PIT7-1860	15-Jun-05	<1	<1	<1	<2	<0.5	<0.5	<0.5	<0.5
W-PIT7-1860	17-Aug-05	<0.5	<0.5	<0.5	<1	<0.5	<0.5	<0.5	<0.5
W-PIT7-1860	31-Oct-05	<0.5	<0.5	<0.5	<1	<0.5	<0.5	<0.5	<0.5
W-PIT7-1861	7-Mar-05	<1 H	<1 H	<1 H	<2 H	<0.5 H	<0.5 H	<0.5 H	<0.5 H
W-PIT7-1861	15-Jun-05	<1	<1	<1	<2	<0.5	<0.5	<0.5	<0.5
W-PIT7-1861	17-Aug-05	<0.5	<0.5	<0.5	<1	<0.5	<0.5	<0.5	<0.5
W-PIT7-1861	31-Oct-05	<0.5	<0.5	<0.5	<1	<0.5	<0.5	<0.5	<0.5
W-PIT7-2141	16-Nov-05	<0.5	<0.5	<0.5	<1	<0.5	<0.5	<0.5	<0.5

Notes:

µg/L = Micrograms per liter.

D = Analysis performed at a secondary dilution or concentration (i.e., vapor samples).

E = The analyte was detected below LLNL reporting limit, but above analytical laboratory minimum detection limit.

H = Sample analyzed outside of holding time, sample results should be evaluated.

L = Spike accuracy not within control limits.

O = Duplicate spike or sample precision not within control limits.

Table A-12. Ground and surface water analyses for anions, TDS, specific conductivity, and pH in samples collected from the Pit 7 Complex between July 1, 2003 and December 31, 2006.

Location	Sample Date	Fluoride (mg/L)	Silica (mg/L)	Nitrate as (NO3) (mg/L)	Chloride (mg/L)	Sulfate (mg/L)	Carbonate (mg/L)	Bicarbonate (mg/L)	TDS (mg/L)	Spec Cond (umhos/cm)	pH (Units)
K7-01	9-Sep-03			43							
K7-01	2-Dec-03			44.1							
K7-01	21-Jan-04			43.5							
K7-01	21-Jan-04			43.2							
K7-01	28-Apr-04			42							
K7-01	4-Aug-04			41.3							
K7-01	2-Nov-04			40.6							
K7-01	24-Jan-05			41.6							
K7-01	24-Jan-05			41.7							
K7-01	5-Apr-05			45							
K7-01	5-Apr-05		81 BFL								
K7-01	5-Apr-05	0.51		44 H	38	31	<5 DH	280 DH	540 DH	720 H	7.75 H
K7-01	11-Jul-05			39.8 D							
K7-01	24-Oct-05			38.5 D							
K7-01	3-Jan-06			41							
K7-01	3-Jan-06			41							
K7-01	13-Apr-06			45							
K7-01	5-Jul-06			45							
K7-01	9-Oct-06			48							
K7-03	17-Sep-03			25.2							
K7-03	9-Dec-03			18.7							
K7-03	21-Jan-04			25.5							
K7-03	20-Apr-04			24.8							
K7-03	10-Aug-04			32.5							
K7-03	29-Oct-04			31							
K7-03	25-Jan-05			25.9							
K7-03	14-Apr-05		66								
K7-03	14-Apr-05	0.29		30 H	27	38	<2 DH	230 DH	420 DH	590 H	7.51 H
K7-03	14-Apr-05		67								
K7-03	14-Apr-05	0.28		31 H	27	38	<2 DH	230 DH	420 DH	580 H	7.64 H
K7-03	14-Apr-05			34							
K7-03	14-Apr-05			33							
K7-03	12-Jul-05			33.7							
K7-03	27-Oct-05			31.6 D							
K7-03	27-Oct-05			32.1 D							
K7-03	5-Jan-06			30							
K7-03	24-Apr-06			27							
K7-03	24-Apr-06			27							
K7-03	6-Jul-06			34							
K7-03	4-Oct-06			37							
K7-06	5-Aug-03			13.2							
K7-06	4-Dec-03			1.2							
K7-06	27-Jan-04			14.8							
K7-06	2-Jun-04			14.8							
K7-06	2-Jun-04			14.6							
K7-06	18-Aug-04			14.1							

Table A-12. Ground and surface water analyses for anions, TDS, specific conductivity, and pH in samples collected from the Pit 7 Complex between July 1, 2003 and December 31, 2006.

Location	Sample Date	Fluoride (mg/L)	Silica (mg/L)	Nitrate as (NO3) (mg/L)	Chloride (mg/L)	Sulfate (mg/L)	Carbonate (mg/L)	Bicarbonate (mg/L)	TDS (mg/L)	Spec Cond (umhos/cm)	pH (Units)
K7-06	4-Nov-04			14.8							
K7-06	4-Nov-04			14.5							
K7-06	1-Feb-05			15.2							
K7-06	5-Apr-05			15							
K7-06	5-Apr-05		66 BFL								
K7-06	5-Apr-05	0.51		15 H	26	37	<2.5 H	140 H	320 DH	430 H	7.98 H
K7-06	3-Aug-05			13.5							
K7-06	31-Oct-05			12.8 D							
K7-06	13-Jan-06			15							
K7-06	25-Apr-06			16							
K7-06	5-Jul-06			15							
K7-06	2-Oct-06			16							
K7-07	22-May-06			26							
K7-09	9-Sep-03			<0.44							
K7-09	9-Sep-03			<0.44							
K7-09	3-Dec-03			<0.44							
K7-09	26-Jan-04			<0.44							
K7-09	3-May-04			<0.44							
K7-09	17-Aug-04			<0.44							
K7-09	4-Nov-04			<0.44							
K7-09	24-Feb-05			<0.44							
K7-09	4-Apr-05		17								
K7-09	4-Apr-05	0.18		<0.44 H	19	210	<5 DH	130 DH	490 DH	720 H	8.55 H
K7-09	4-Apr-05			<0.5							
K7-09	2-Aug-05			<0.5							
K7-09	1-Nov-05			<0.5							
K7-09	4-Jan-06			<0.5							
K7-09	2-May-06			<0.5							
K7-09	17-Jul-06			<0.5							
K7-09	17-Jul-06			<0.5							
K7-09	4-Oct-06			<0.5							
K7-10	31-Jul-03			0.96							
K7-10	4-Dec-03			13.7							
K7-10	27-Jan-04			0.52							
K7-10	3-May-04			<0.44							
K7-10	17-Aug-04			<0.44							
K7-10	23-Nov-04			<0.44 E							
K7-10	3-Feb-05			1.4							
K7-10	4-Apr-05		3.9								
K7-10	4-Apr-05	0.12		0.58 H	12	290	20 H	<2.5 H	470 DH	720 H	10.89 H
K7-10	4-Apr-05			1.1							
K7-10	2-Aug-05			1.45 E							
K7-10	1-Nov-05			0.996							
K7-10	4-Jan-06			1.5							
K7-10	2-May-06			1.1							
K7-10	17-Jul-06			0.72							

Table A-12. Ground and surface water analyses for anions, TDS, specific conductivity, and pH in samples collected from the Pit 7 Complex between July 1, 2003 and December 31, 2006.

Location	Sample Date	Fluoride (mg/L)	Silica (mg/L)	Nitrate as (NO3) (mg/L)	Chloride (mg/L)	Sulfate (mg/L)	Carbonate (mg/L)	Bicarbonate (mg/L)	TDS (mg/L)	Spec Cond (umhos/cm)	pH (Units)
K7-10	2-Oct-06			1.6							
K7-10	2-Oct-06			0.55							
MUL2	21-Aug-03			12							
MUL2	28-Jul-04			9.31							
MUL2	2-Aug-05			8.4 D							
MUL2	25-Jan-06			10 D							
MUL2	8-Aug-06			9.7							
NC7-12	15-May-06			27 H							
NC7-12	16-Aug-06			35 D							
NC7-12	17-Oct-06			26 D							
NC7-15	9-Dec-03			8 D							
NC7-15	1-Jun-04			38 D							
NC7-15	26-Apr-05			36							
NC7-15	26-Apr-05		70								
NC7-15	26-Apr-05	0.39		36 H	29	35	<1 H	150 H	380 DH	520	7.35
NC7-15	26-Apr-05		72								
NC7-15	26-Apr-05	0.4 H		33 D	30 D	46 D	<20 DHLO	150 DH	360	510 H	7.7 H
NC7-15	26-Apr-05			33 D							
NC7-15	15-May-06			33 DH							
NC7-15	17-May-06			35							
NC7-16	18-May-05		76								
NC7-16	18-May-05	0.28		37	19 D	29	<10 HLO	240 H	450 H	600 H	7.5
NC7-16	18-May-05		78								
NC7-16	18-May-05	0.4		40 D	21 D	30 D	<10 HLO	250 H	440 H	600 H	7.4
NC7-19	11-May-04			26							
NC7-19	11-May-04			27 D							
NC7-19	26-Apr-05		74								
NC7-19	26-Apr-05	0.45 H		28 D	22 D	52 D	<10 HLO	180 H	380	550 H	7.8 H
NC7-19	26-Apr-05		73								
NC7-19	26-Apr-05	0.43 H		28 D	23 D	56 D	<10 HLO	180 H	390	550 H	7.8 H
NC7-19	26-Apr-05			28 D							
NC7-19	26-Apr-05			28 D							
NC7-19	1-Jun-06			29 D							
NC7-20	2-Jun-05		69								
NC7-20	2-Jun-05	0.24 H		36 D	26 D	52 D	<10 H	240 H	490 H	660 H	7.6 H
NC7-21	2-Jun-05		74								
NC7-21	2-Jun-05	0.23 H		39 D	40 D	49 D	<10 H	360 H	580 H	890 H	7.6 H
NC7-25	31-Jul-03			36.4							
NC7-25	5-Dec-03			36.8							
NC7-25	4-Mar-04			37.2							
NC7-25	29-Apr-04			37.2							
NC7-25	22-Jul-04			36.2							
NC7-25	29-Oct-04			36							
NC7-25	25-Jan-05			36.1							
NC7-25	6-Apr-05		66								
NC7-25	6-Apr-05	0.57		37 H	86	46	<5 D	370 D	690 DH	980	7.86

Table A-12. Ground and surface water analyses for anions, TDS, specific conductivity, and pH in samples collected from the Pit 7 Complex between July 1, 2003 and December 31, 2006.

Location	Sample Date	Fluoride (mg/L)	Silica (mg/L)	Nitrate as (NO3) (mg/L)	Chloride (mg/L)	Sulfate (mg/L)	Carbonate (mg/L)	Bicarbonate (mg/L)	TDS (mg/L)	Spec Cond (umhos/cm)	pH (Units)
NC7-25	6-Apr-05			37							
NC7-25	12-Jul-05			39.3							
NC7-25	26-Oct-05			30.8 D							
NC7-25	5-Jan-06			36							
NC7-25	24-Apr-06			38							
NC7-25	10-Jul-06			37							
NC7-25	4-Oct-06			38							
NC7-26	12-Sep-03			<0.44							
NC7-26	8-Dec-03			<0.44							
NC7-26	27-Jan-04			<0.44							
NC7-26	29-Apr-04			<0.44							
NC7-26	5-Aug-04			<0.44							
NC7-26	2-Nov-04			<0.44 E							
NC7-26	27-Jan-05			<0.44 E							
NC7-26	6-Apr-05		53								
NC7-26	6-Apr-05	0.3		<0.44 H	33	110	<5 D	190 D	450 DH	620	7.98
NC7-26	6-Apr-05			<0.44							
NC7-26	12-Jul-05			<0.5							
NC7-26	20-Oct-05			<0.5							
NC7-26	10-Jan-06			<0.5							
NC7-26	27-Apr-06			<0.5							
NC7-26	10-Jul-06			<0.5							
NC7-26	2-Oct-06			<0.5							
NC7-34	1-Jun-05		85								
NC7-34	1-Jun-05	0.26 HL		40 D	64 D	58 D	<10 H	320 H	620 H	920 H	7.6
NC7-34	1-Jun-05		82								
NC7-34	1-Jun-05	0.27 HL		32 D	55 D	85 D	<10 H	280 H	600 H	890 H	7.6
NC7-34	10-Feb-06			29 D							
NC7-34	6-Jun-06			29 D							
NC7-34	6-Jun-06			29 D							
NC7-34	18-Sep-06			35							
NC7-34	1-Dec-06			27 D							
NC7-36	1-Jun-05		75								
NC7-36	1-Jun-05	0.39 HL		52 D	80 D	57 D	<10 H	150 H	440 H	650 H	7.5
NC7-36	6-Jun-06			44 D							
NC7-36	18-Sep-06			38							
NC7-36	1-Dec-06			30 D							
NC7-37	5-Jun-06			30 D							
NC7-37	19-Sep-06			31 D							
NC7-37	28-Nov-06			29							
NC7-40	4-Mar-04	0.46 H		42.5 H	44 H	48 H	<5 DH	390 DH	677 HD	976 H	7.53 H
NC7-40	1-Jun-06			34 D							
NC7-40	18-Oct-06			33							
NC7-40	18-Oct-06			35 D							
NC7-47	5-Aug-03			72							
NC7-47	5-Dec-03			70.6							

Table A-12. Ground and surface water analyses for anions, TDS, specific conductivity, and pH in samples collected from the Pit 7 Complex between July 1, 2003 and December 31, 2006.

Location	Sample Date	Fluoride (mg/L)	Silica (mg/L)	Nitrate as (NO3) (mg/L)	Chloride (mg/L)	Sulfate (mg/L)	Carbonate (mg/L)	Bicarbonate (mg/L)	TDS (mg/L)	Spec Cond (umhos/cm)	pH (Units)
NC7-47	8-Mar-04			70.6							
NC7-47	26-Apr-04			69.7							
NC7-47	29-Jul-04			71.5							
NC7-47	29-Jul-04			71.5							
NC7-47	28-Oct-04			71.9 D							
NC7-47	26-Jan-05			69.7							
NC7-47	26-Apr-05		54								
NC7-47	26-Apr-05	0.64		72 H	63	21	<5 D	150 BD	420 DH	630	8.12
NC7-47	26-Apr-05			78 D							
NC7-47	5-Jul-05			64.2 DH							
NC7-47	5-Jul-05			65.6 DH							
NC7-47	19-Oct-05			60.5 D							
NC7-47	19-Jan-06			69							
NC7-47	4-Apr-06			71							
NC7-47	6-Jul-06			68							
NC7-47	3-Oct-06			74							
NC7-48	5-Aug-03			19.7							
NC7-48	9-Dec-03			20.1							
NC7-48	9-Dec-03			20							
NC7-48	9-Mar-04			19.6							
NC7-48	28-Apr-04			18.6							
NC7-48	10-Aug-04			18							
NC7-48	2-Nov-04			18.9							
NC7-48	3-Feb-05			18.9							
NC7-48	6-Apr-05		85								
NC7-48	6-Apr-05	0.27		19 H	38	31	<5 D	330 D	540 DH	750	7.26
NC7-48	6-Apr-05			19							
NC7-48	11-Jul-05			18.1 DE							
NC7-48	20-Oct-05			14.9 D							
NC7-48	13-Jan-06			17							
NC7-48	25-Apr-06			17							
NC7-48	6-Jul-06			9.9							
NC7-48	2-Oct-06			13							
NC7-49A	1-Jun-05		67								
NC7-49A	1-Jun-05	0.65 HL		28 D	70 DL	46 D	<10 H	160 H	380 H	580 H	7.6
NC7-50	19-May-05		20								
NC7-50	19-May-05	1.2 D		150 D	470 D	1600 DH	<10 HLO	160 H	3900 H	4100 H	7.4
NC7-51	23-May-06			41							
NC7-51	5-Dec-06			42							
NC7-51	5-Dec-06			38 D							
NC7-52	1-Jun-05		66								
NC7-52	1-Jun-05	<0.5 DL		31 D	42 D	67 D	<10 H	130 H	360 H	510 H	7.9
NC7-52A	1-Jun-05		25								
NC7-52A	1-Jun-05	0.24 HL		15 D	35 D	87 D	<10 H	160 H	380 H	550 H	7.5
NC7-53	8-Jun-05		67								
NC7-53	8-Jun-05	0.54		24	33 D	33 D	<10 H	140 H	330 H	470 H	7.4

Table A-12. Ground and surface water analyses for anions, TDS, specific conductivity, and pH in samples collected from the Pit 7 Complex between July 1, 2003 and December 31, 2006.

Location	Sample Date	Fluoride (mg/L)	Silica (mg/L)	Nitrate as (NO3) (mg/L)	Chloride (mg/L)	Sulfate (mg/L)	Carbonate (mg/L)	Bicarbonate (mg/L)	TDS (mg/L)	Spec Cond (umhos/cm)	pH (Units)
NC7-60	19-May-04			<0.1 L							
NC7-60	23-May-05		26								
NC7-60	23-May-05	0.67		0.49	32 D	100 D	<10 HLO	120 H	350 H	530 H	8.8
NC7-60	23-May-05			0.39							
NC7-60	1-Jun-06			0.59							
NC7-63	23-May-06			38 D							
NC7-63	14-Sep-06			38 D							
NC7-63	4-Dec-06			41 D							
NC7-64	23-May-06			39 D							
NC7-64	14-Sep-06			39 D							
NC7-64	4-Dec-06			47							
NC7-65	23-May-05		42 L								
NC7-65	23-May-05	0.56		0.57	43 D	81 DL	<10 H	150 H	380 H	550 H	7.8
NC7-67	18-May-05		26								
NC7-67	18-May-05	0.23		0.37	21 D	44 D	<10 HLO	170 H	300 H	470 H	8.2
NC7-68	18-May-05		66								
NC7-68	18-May-05	0.58		17	29 D	28	<10 HLO	180 H	390 H	490 H	7.8
NC7-75	20-May-05		30								
NC7-75	20-May-05	0.85		<0.1	40 D	37 D	<10 HLO	170 H	300 H	510 H	8 H
NC7-76	11-May-04			21							
NC7-76	25-Aug-05			25.4 D							
NC7-76	18-May-06			12							
SPRING13	20-Dec-04	0.58 D		10.4 D	67 D	877 D	<10 DH	200 DH	1600 DH	1970	7.61
SPRING24	1-Mar-04	0.62		30	50 D	20 D	<2 DH	140 DH	410 DH	560 H	7.8
SPRING24	8-Jun-04			5.6							
SPRING24	8-Jun-05		44								
SPRING24	8-Jun-05	0.75		2.1	76 D	39 D	22 H	110 H	390 DH	560 H	9
SPRING24	8-Jun-05			2.1							
SPRING24	10-Apr-06			<0.1							
W-865-01	6-Aug-03		32								
W-865-01	6-Aug-03	0.69 H		12 H	12 H	73 DH	<2 DH	150 DH	370 H	470 H	8 H
W-865-01	17-Nov-03		32								
W-865-01	17-Nov-03	0.3		4	14	73 D	<2 DH	150 DH	360 H	480 H	8.1
W-865-01	3-Mar-04		48								
W-865-01	3-Mar-04	0.15		26	10	76 D	<2 DH	120 DH	400 H	490 H	8.1
W-865-01	17-May-05		42								
W-865-01	17-May-05	0.15		3.7	1.8	28	<10 HLO	150 H	290 D	330 H	8
W-865-01	11-Apr-06			12							
W-865-01	30-Aug-06			4.4							
W-865-03	6-Aug-03		65								
W-865-03	6-Aug-03	0.92 H		66 DH	52 DH	35 DH	<1 H	140 H	400 H	540 H	7.9 H
W-865-03	17-Nov-03		68								
W-865-03	17-Nov-03	0.6		65 D	54 D	33 D	<2 DH	130 DH	380 H	540 H	7.9
W-865-03	3-Mar-04		68								
W-865-03	3-Mar-04	0.66		42 D	52 D	35 D	<2 DH	120 DH	360 H	550 H	7.8
W-865-03	20-May-05		62								

Table A-12. Ground and surface water analyses for anions, TDS, specific conductivity, and pH in samples collected from the Pit 7 Complex between July 1, 2003 and December 31, 2006.

Location	Sample Date	Fluoride (mg/L)	Silica (mg/L)	Nitrate as (NO3) (mg/L)	Chloride (mg/L)	Sulfate (mg/L)	Carbonate (mg/L)	Bicarbonate (mg/L)	TDS (mg/L)	Spec Cond (umhos/cm)	pH (Units)
W-865-03	20-May-05	0.72		46 D	54 D	36 D	<10 HLO	130 H	380 H	560 H	8
W-865-03	11-Apr-06			37 D							
W-865-03	19-Dec-06			41 D							
W-865-04	6-Aug-03		29								
W-865-04	6-Aug-03	0.7 H		30 DH	45 DH	68 DH	<1 H	160 H	340 H	560 H	8.1 H
W-865-04	17-Nov-03		30								
W-865-04	17-Nov-03	0.37		18	48 D	70 D	<2 DH	150 DH	370 H	570 H	8.2
W-865-04	24-Feb-04		30								
W-865-04	24-Feb-04	0.24		3.3	45 D	45 D	<2 D	150 D	340	580 H	8.3
W-865-04	5-Apr-06			1.8							
W-865-04	18-Oct-06			1.9							
W-865-07	6-Aug-03		67								
W-865-07	6-Aug-03	1.1 H		88 DH	54 DH	54 DH	<1 H	130 H	460 H	610 H	7.4 H
W-865-07	2-Dec-03		71								
W-865-07	2-Dec-03	0.64		87 D	46 D	31	<2 DH	120 DH	440 H	590 H	7.6
W-865-07	24-Feb-04		74								
W-865-07	24-Feb-04	0.27		79 D	48 D	13	<1	130	460	620 H	7.9
W-865-07	13-May-05		70								
W-865-07	13-May-05	0.76		76 D	47 D	42 D	<10 HLO	130 H	420 H	630 H	7.5
W-865-07	5-Apr-06			86 D							
W-865-07	18-Oct-06			78 D							
W-865-1804	9-Jun-04		59								
W-865-1804	9-Jun-04			33							
W-865-1804	10-Mar-05	0.52		29	49 D	77 D	<10 HLO	150 H	430 H	660 H	7.9
W-865-1804	17-May-05		56								
W-865-1804	17-May-05	0.53		26	52 D	80 D	<10 HLO	150 H	450	620 H	7.8
W-PIT7-02	7-Jun-05		30								
W-PIT7-02	7-Jun-05	0.19		1.4	18 D	36 D	<10 H	150 H	280 H	420 H	8.3
W-PIT7-03	24-May-06			38 D							
W-PIT7-03	5-Dec-06			39							
W-PIT7-03	5-Dec-06			37 D							
W-PIT7-10	22-May-06			41 D							
W-PIT7-10	28-Nov-06			41 D							
W-PIT7-12	20-May-05		56								
W-PIT7-12	20-May-05	0.73		47 D	82 D	75 D	<10 HLO	150 H	500 H	750 H	8
W-PIT7-13	23-May-05		68 L								
W-PIT7-13	23-May-05	0.46		58 D	67 D	31 DL	<10 H	220 H	520 H	730 H	7.8
W-PIT7-14	18-Dec-03	0.56		4.9	30 D	70 D	40 H	<1 H	270 H	570 H	11.1
W-PIT7-14	9-Mar-04	0.45		0.7	27 BD	62 BD	30 H	<1 H	260	500 H	11.4
W-PIT7-14	20-May-05		7.9								
W-PIT7-14	20-May-05	0.45		1.4	23 D	61 D	24 HLO	<10 H	230 H	530 H	10.9
W-PIT7-15	12-Apr-06			<0.1							
W-PIT7-15	7-Dec-06			<0.1							
W-PIT7-16	28-Dec-04			<0.44							
W-PIT7-16	27-Apr-05			<0.44							
W-PIT7-16	27-Apr-05		17								

Table A-12. Ground and surface water analyses for anions, TDS, specific conductivity, and pH in samples collected from the Pit 7 Complex between July 1, 2003 and December 31, 2006.

Location	Sample Date	Fluoride (mg/L)	Silica (mg/L)	Nitrate as (NO3) (mg/L)	Chloride (mg/L)	Sulfate (mg/L)	Carbonate (mg/L)	Bicarbonate (mg/L)	TDS (mg/L)	Spec Cond (umhos/cm)	pH (Units)
W-PIT7-16	27-Apr-05	0.34		<0.44 H	29 B	87	<2 DH	160 DH	360 DH	580	7.85
W-PIT7-16	18-May-06			<0.1							
W-PIT7-1725	20-Aug-03	<0.05		0.2	21 DH	10	3000 DH	2000 DH	1000 DH	3500 H	12.2
W-PIT7-1725	10-Mar-04	0.25		2.7	30 BD	20 D	60 DH	1700 DH	320 DH	520 H	9.3
W-PIT7-1860	7-Mar-05	0.34		<1 D	25 D	45 D	<10 H	130 H	250 H	410 H	7.9
W-PIT7-1860	15-Jun-05		49								
W-PIT7-1860	15-Jun-05			8.5							
W-PIT7-1860	15-Jun-05	0.4			26 D	33 D	<10 H	120 H	250 H	400 H	7.7
W-PIT7-1860	17-Aug-05			17							
W-PIT7-1860	31-Oct-05		70.1 L								
W-PIT7-1860	31-Oct-05			20.8 D							
W-PIT7-1860	31-Oct-05	1.02		20.8 D	18.3 D	17.1	<1	108	300	364	8
W-PIT7-1860	31-Oct-05			22.5 D							
W-PIT7-1861	7-Mar-05	0.45 H			18 D	29 D	<10 H	120 H	270 H	350 H	7.8
W-PIT7-1861	15-Jun-05		72								
W-PIT7-1861	15-Jun-05			27							
W-PIT7-1861	15-Jun-05	0.31			18 D	17 D	<10 H	120 H	270 H	340 H	7.7
W-PIT7-1861	17-Aug-05			22.5 D							
W-PIT7-1861	31-Oct-05		71.5 L								
W-PIT7-1861	31-Oct-05	0.977		23.6 D	17.1 D	15.6	<1	97.6	295	353	7.72
W-PIT7-1861	31-Oct-05			22.5 D							
W-PIT7-1903	11-Jul-03	0.3 H		35 DH	55 H	49 H	<5 DH	420 DH	683 DH	1000 H	7.97 H
W-PIT7-1903	8-Aug-03	0.25 H		17 H	51 H	51 H	<5 DH	420 DH	690 DH	942 H	8.05 H
W-PIT7-1903	5-Sep-03	0.36 H		34 DH	46 H	48 H	<10 DH	420 DH	680 DH	1010 H	7.55 H
W-PIT7-1903	10-Oct-03	<0.05 H		37 DH	68	76 H	<5 DH	300 DH	693 DH	1020 H	7.42 H
W-PIT7-1903	7-Nov-03	0.27 H		38 DH	52	51 H	<10 DH	430 DH	700 DH	1030 H	7.94 H
W-PIT7-1903	12-Dec-03	0.3 H		35 DH	48	51 H	<5 DH	430 DH	680 DH	1080 H	7.71 H
W-PIT7-1903	9-Jan-04	0.33 H		38 DH	46 H	52 H	<5 DH	430 DH	687 DH	1020 H	7.84 H
W-PIT7-1903	6-Feb-04	0.3 H		30 DH	50	54 H	<5 DH	430 DH	707 DH	1020 H	7.68 H
W-PIT7-1903	4-Mar-04	0.38 H		38.4 H	45 H	53 H	<10 DH	430 DH	680 HD	1000 H	7.7 H
W-PIT7-1904	11-Jul-03	0.37 H		43 DH	43 H	44 H	<5 DH	420 DH	693 DH	984 H	7.72 H
W-PIT7-1904	8-Aug-03	0.36 H		9.1 DH	41 H	45 H	<5 DH	420 DH	687 DH	911 H	7.76 H
W-PIT7-1904	5-Sep-03	0.38 H		39 DH	42 H	45 H	<5 DH	420 DH	673 DH	970 H	7.6 H
W-PIT7-1904	10-Oct-03	0.38 H		44 DH	47	50 H	<10 DH	430 DH	683 DH	1000 H	7.54 H
W-PIT7-1904	7-Nov-03	0.45 H		9.1 DH	47	48 H	<10 DH	420 DH	707 DH	1020 H	7.67 H
W-PIT7-1904	12-Dec-03	0.37 H		41 DH	46	48 H	<5 DH	420 DH	667 DH	1090 H	7.95 H
W-PIT7-1904	9-Jan-04	0.4 H		40 DH	46 H	49 H	<5 DH	420 DH	690 DH	1010 H	7.83 H
W-PIT7-1904	6-Feb-04	0.36 H		39 DH	47	48 H	<5 DH	420 DH	690 DH	997 H	7.76 H
W-PIT7-1904	4-Mar-04	0.48 H		41 H	47 H	50 H	<10 DH	440 DH	683 HD	1000 H	7.54 H
W-PIT7-1905	11-Jul-03	<0.05 H		24 DH	91 H	97 H	<5 DH	350 DH	707 DH	1050 H	7.93 H
W-PIT7-1905	8-Aug-03	<0.05 H		25 DH	64 H	69 H	<10 DH	400 DH	697 DH	934 H	7.82 H
W-PIT7-1905	5-Sep-03	<0.05 H		26 DH	61 H	64 H	<10 DH	420 DH	690 DH	1010 H	7.74 H
W-PIT7-1905	10-Oct-03	0.42 H		41 DH	43	46 H	<5 DH	380 DH	700 DH	1050 H	7.66 H
W-PIT7-1905	7-Nov-03	<0.05 H		23 DH	53	58 H	<10 DH	440 DH	673 DH	1030 H	7.94 H
W-PIT7-1905	12-Dec-03	<0.05 H		29 DH	61	69 H	<5 DH	410 DH	680 DH	1110 H	7.98 H
W-PIT7-1905	9-Jan-04	<0.05 H		27 DH	52 H	58 H	<5 DH	430 DH	693 DH	1040 H	7.83 H

Table A-12. Ground and surface water analyses for anions, TDS, specific conductivity, and pH in samples collected from the Pit 7 Complex between July 1, 2003 and December 31, 2006.

Location	Sample Date	Fluoride (mg/L)	Silica (mg/L)	Nitrate as (NO3) (mg/L)	Chloride (mg/L)	Sulfate (mg/L)	Carbonate (mg/L)	Bicarbonate (mg/L)	TDS (mg/L)	Spec Cond (umhos/cm)	pH (Units)
W-PIT7-1905	6-Feb-04	<0.05 H		25 DH	53	58 H	<5 DH	440 DH	713 DH	1050 H	7.83 H
W-PIT7-1905	4-Mar-04	<0.05 H		31.9 H	65 H	72 H	<10 DH	460 DH	753 HD	1120 H	7.91 H
W-PIT7-1907	11-Jul-03	<0.05 H		<0.4 H	284 H	258 H	520 DH	240 DH	1610 DH	2570 H	9.96 H
W-PIT7-1907	8-Aug-03	<0.05 H		1.1 H	183 DH	177 H	560 DH	150 DH	663 DH	1920 H	10 H
W-PIT7-1907	5-Sep-03	<0.05 H		2.6 H	239 H	222 H	410 DH	260 DH	1430 DH	2220 H	9.82 H
W-PIT7-1907	10-Oct-03	<0.05 H		7.5 H	113	123 H	440 DH	260 DH	1110 DH	1700 H	9.67 H
W-PIT7-1907	7-Nov-03	<0.05 H		7.5 H	119	132 H	360 DH	350 DH	1080 DH	1780 H	9.64 H
W-PIT7-1907	12-Dec-03	<0.05 H		1.8 H	121	124 H	330 DH	380 DH	1080 DH	1830 H	9.56 H
W-PIT7-1907	9-Jan-04	<0.05 H		3.4 H	144 H	145 H	370 DH	360 DH	1150 DH	1810 H	9.49 H
W-PIT7-1907	6-Feb-04	<0.05 H		4.9 H	140	143 H	320 DH	450 DH	1180 DH	1920 H	9.34 H
W-PIT7-1907	4-Mar-04	<0.05 H		9.35 H	77 H	92 H	250 DH	500 DH	1000 HD	1570 H	9.17 H
W-PIT7-1915	11-Jul-03	<0.25 DH		0.44 H	1450 DH	1150 DH	280 DH	91 DH	2080 DH	3190 H	9.81 H
W-PIT7-1915	8-Aug-03	<0.1 DH		<0.4 H	560 DH	454 DH	320 DH	68 DH	2040 DH	3040 H	9.95 H
W-PIT7-1915	5-Sep-03	<0.1 DH		<0.4 H	504 DH	399 DH	270 DH	130 DH	1900 DH	3010 H	9.85 H
W-PIT7-1915	10-Oct-03	<0.1 DH		8.4 H	463 D	363 DH	200 DH	200 DH	1680 DH	2720 H	9.35 H
W-PIT7-1915	7-Nov-03	<0.1 DH		4.4 H	453 D	370 DH	170 DH	220 DH	1550 DH	2650 H	9.2 H
W-PIT7-1915	12-Dec-03	<0.1 DH		3.9 H	446 D	355 DH	160 DH	220 DH	1550 DH	2680 H	9.19 H
W-PIT7-1915	9-Jan-04	<0.1 DH		7.1 H	443 HD	356 DH	160 DH	240 DH	1610 DH	2620 H	9.14 H
W-PIT7-1915	6-Feb-04	<0.1 DH		8 H	424 D	344 DH	130 DH	290 DH	1660 DH	2590 H	9.07 H
W-PIT7-1915	4-Mar-04	<0.1 HD		9.28 HD	431 HD	353 HD	170 DH	300 DH	1600 HD	2620 H	9.1 H
W-PIT7-1916	11-Jul-03	0.32 H		35 DH	82 H	65 H	<5 DH	390 DH	733 DH	1080 H	7.58 H
W-PIT7-1916	8-Aug-03	0.27 H		33 H	91 H	68 H	<5 DH	400 DH	783 DH	1070 H	7.48 H
W-PIT7-1916	5-Sep-03	0.33 H		34 DH	92 H	68 H	<10 DH	400 DH	793 DH	1130 H	7.61 H
W-PIT7-1916	10-Oct-03	0.38 H		37 DH	92	70 H	<10 DH	400 DH	770 DH	1130 H	7.41 H
W-PIT7-1916	7-Nov-03	0.32 H		34 DH	95	74 H	<10 DH	410 DH	777 DH	1130 H	7.8 H
W-PIT7-1916	12-Dec-03	0.37 H		31 DH	93	70 H	<10 DH	400 DH	700 DH	1160 H	7.78 H
W-PIT7-1916	9-Jan-04	0.33 H		32 DH	94 H	69 H	<10 DH	400 DH	700 DH	1130 H	7.85 H
W-PIT7-1916	6-Feb-04	0.31 H		29 DH	94	69 H	<10 DH	410 DH	733 DH	1120 H	7.61 H
W-PIT7-1916	4-Mar-04	0.39 H		32.1 H	96 H	70 H	<10 DH	400 DH	777 HD	1110 H	7.67 H
W-PIT7-1917	11-Jul-03	0.38 H		37 DH	76 H	53 H	<5 DH	410 DH	730 DH	1080 H	7.79 H
W-PIT7-1917	8-Aug-03	0.36 H		36 DH	67 H	52 H	<5 DH	450 DH	767 DH	870 H	7.67 H
W-PIT7-1917	5-Sep-03	0.37 H		363 DHS	66 H	50 H	<10 DH	440 DH	713 DH	1090 H	7.88 H
W-PIT7-1917	10-Oct-03	0.48 H		41 DH	67	51 H	<10 DH	410 DH	687 DH	1080 H	7.41 H
W-PIT7-1917	7-Nov-03	0.41 H		40 DH	71	53 H	<10 DH	410 DH	700 DH	1080 H	7.86 H
W-PIT7-1917	12-Dec-03	0.37 H		39 DH	72	54 H	<10 DH	440 DH	713 DH	1130 H	7.7 H
W-PIT7-1917	9-Jan-04	0.39 H		38 DH	73 H	55 H	<10 DH	440 DH	713 DH	1100 H	7.9 H
W-PIT7-1917	6-Feb-04	0.36 H		38 DH	73	54 H	<10 DH	440 DH	1040 DH	2000 H	7.56 H
W-PIT7-1917	4-Mar-04	0.51 H		40.2 H	74 H	53 H	<10 DH	410 DH	673 HD	1050 H	7.8 H
W-PIT7-1918	11-Jul-03	0.34 H		34 DH	102 H	77 H	<5 DH	400 DH	787 DH	1180 H	7.76 H
W-PIT7-1918	8-Aug-03	0.36 H		33 DH	90 H	73 H	<5 DH	410 DH	770 DH	1070 H	7.75 H
W-PIT7-1918	5-Sep-03	0.36 H		34 DH	83 H	72 H	<10 DH	410 DH	757 DH	1120 H	7.82 H
W-PIT7-1918	10-Oct-03	0.39 H		37 DH	81	74 H	<10 DH	410 DH	717 DH	1130 H	7.36 H
W-PIT7-1918	7-Nov-03	0.37 H		35 DH	84	76 H	<10 DH	410 DH	673 DH	1130 H	7.79 H
W-PIT7-1918	12-Dec-03	0.49 H		35 DH	85	74 H	<10 DH	400 DH	727 DH	1150 H	7.58 H
W-PIT7-1918	9-Jan-04	0.42 H		35 DH	81 H	72 H	<10 DH	410 DH	713 DH	1110 H	7.83 H
W-PIT7-1918	6-Feb-04	0.36 H		35 DH	79	72 H	<5 DH	400 DH	723 DH	1090 H	7.58 H

Table A-12. Ground and surface water analyses for anions, TDS, specific conductivity, and pH in samples collected from the Pit 7 Complex between July 1, 2003 and December 31, 2006.

Location	Sample Date	Fluoride (mg/L)	Silica (mg/L)	Nitrate as (NO3) (mg/L)	Chloride (mg/L)	Sulfate (mg/L)	Carbonate (mg/L)	Bicarbonate (mg/L)	TDS (mg/L)	Spec Cond (umhos/cm)	pH (Units)
W-PIT7-1918	4-Mar-04	0.43 H		34 H	76 H	75 H	<10 DH	410 DH	720 HD	1100 H	7.61 H
W-PIT7-1919	11-Jul-03	0.34 H		36 H	56 H	63 H	<5 DH	420 DH	717 DH	1050 H	7.75 H
W-PIT7-1919	8-Aug-03	0.39 H		35 DH	50 H	61 H	<5 DH	420 DH	690 DH	964 H	7.6 H
W-PIT7-1919	5-Sep-03	0.35 H		36 DH	47 H	60 H	<10 DH	410 DH	657 DH	1010 H	7.86 H
W-PIT7-1919	10-Oct-03	0.35 H		39 DH	46	61 H	<10 DH	420 DH	687 DH	1180 H	7.61 H
W-PIT7-1919	7-Nov-03	0.43 H		38 DH	50	64 H	<10 DH	420 DH	673 DH	1020 H	7.84 H
W-PIT7-1919	12-Dec-03	0.38 H		37 DH	48	62 H	<5 DH	420 DH	690 DH	1060 H	7.6 H
W-PIT7-1919	9-Jan-04	0.34 H		39 DH	45 H	61 H	<5 DH	430 DH	690 DH	1030 H	7.69 H
W-PIT7-1919	6-Feb-04	0.44 H		35 DH	46	62 H	<5 DH	410 DH	700 DH	1020 H	7.6 H
W-PIT7-1919	4-Mar-04	0.42 H		37.2 H	45 H	63 H	<10 DH	440 DH	683 HD	1020 H	7.72 H
W-PIT7-2141	16-Nov-05		56.5								
W-PIT7-2141	16-Nov-05			27.1 D							
W-PIT7-2141	16-Nov-05	0.635		31.6 D	43 D	45.9 D			440	709	7.86

Notes:

mg/L = Milligrams per liter.

umhos/cm = Micromhos per centimeter.

Units = pH units.

B = Analyte found in method blank.

D = Analysis performed at a secondary dilution or concentration (i.e., vapor samples).

E = The analyte was detected below LLNL reporting limit, but above analytical laboratory minimum detection limit.

F = Analyte found in field blank, trip blank, or equipment blank.

H = Sample analyzed outside of holding time, sample results should be evaluated.

L = Spike accuracy not within control limits.

O = Duplicate spike or sample precision not within control limits.

S = Analytical results for this sample are suspect.

Table A-13. Ground and surface water analyses for high explosives compounds (μg/L) in samples collected from the Pit 7 Complex between July 1, 2003 and December 31, 2006.

Location	Sample Date	HMX (ug/L)	RDX (ug/L)
K7-01	9-Sep-03	<5	<5
K7-01	2-Dec-03	<5	<5
K7-01	21-Jan-04	<5	<5
K7-01	21-Jan-04	<5	<5
K7-01	28-Apr-04	<5	<5
K7-01	4-Aug-04	<5	<5
K7-01	2-Nov-04	<5	<5
K7-01	24-Jan-05	<5	<5
K7-01	24-Jan-05	<5	<5
K7-01	5-Apr-05	<3.3	<3.3
K7-01	11-Jul-05	<1	<1
K7-01	24-Oct-05	<1	<1
K7-01	3-Jan-06	<5	<5
K7-01	3-Jan-06	<5	<5
K7-01	13-Apr-06	<1	<1
K7-01	5-Jul-06	<1	<1
K7-01	9-Oct-06	<1	<1
K7-03	17-Sep-03	<5 L	<5
K7-03	9-Dec-03	<5	<5
K7-03	21-Jan-04	<5	<5
K7-03	20-Apr-04	<5	<5
K7-03	10-Aug-04	<5	<5
K7-03	29-Oct-04	<5	<5
K7-03	25-Jan-05	<5	<5
K7-03	14-Apr-05	<5 D	<5 D
K7-03	14-Apr-05	<3.7	<3.7
K7-03	12-Jul-05	<1	<1
K7-03	27-Oct-05	<1	<1
K7-03	27-Oct-05	<1	<1
K7-03	5-Jan-06	<5	<5
K7-03	24-Apr-06	<1	<1
K7-03	24-Apr-06	<1	<1
K7-03	6-Jul-06	<1	<1
K7-03	4-Oct-06	<1	<1
K7-06	5-Aug-03	<5	<5
K7-06	4-Dec-03	<5	<5 O
K7-06	27-Jan-04	<5	<5
K7-06	2-Jun-04	<5	<5
K7-06	2-Jun-04	<5	<5
K7-06	18-Aug-04	<5	<5
K7-06	4-Nov-04	<5	<5
K7-06	4-Nov-04	<5	<5
K7-06	1-Feb-05	<5	<5
K7-06	5-Apr-05	<3.1	<3.1
K7-06	3-Aug-05	<1	<1

Table A-13. Ground and surface water analyses for high explosives compounds (μg/L) in samples collected from the Pit 7 Complex between July 1, 2003 and December 31, 2006.

Location	Sample Date	HMX (ug/L)	RDX (ug/L)
K7-06	31-Oct-05	<1	<1
K7-06	13-Jan-06	<5	<5
K7-06	25-Apr-06	<1	<1
K7-06	5-Jul-06	<1	<1
K7-06	2-Oct-06	<1	<1
K7-09	9-Sep-03	<5	<5
K7-09	9-Sep-03	<5	<5
K7-09	3-Dec-03	<5	<5
K7-09	26-Jan-04	<5	<5
K7-09	3-May-04	<5	<5
K7-09	17-Aug-04	<5	<5
K7-09	4-Nov-04	<5	<5
K7-09	24-Feb-05	<3.8	<3.8
K7-09	4-Apr-05	<3.4	<3.4
K7-09	2-Aug-05	<1	<1
K7-09	1-Nov-05	<1	<1
K7-09	4-Jan-06	<5	<5
K7-09	2-May-06	<1 D	<1 D
K7-09	17-Jul-06	<1	<1
K7-09	17-Jul-06	<1	<1
K7-09	4-Oct-06	<1	<1
K7-10	31-Jul-03	<5	<5
K7-10	4-Dec-03	<5	<5 O
K7-10	27-Jan-04	<5	<5
K7-10	3-May-04	<50 D	72 DIJS
K7-10	2-Jun-04	<5	<5
K7-10	9-Jun-04	<5	<5
K7-10	17-Aug-04	<5	<5
K7-10	23-Nov-04	<5	<5
K7-10	3-Feb-05	<5	<5
K7-10	4-Apr-05	<5 D	<5 D
K7-10	2-Aug-05	<1	<1
K7-10	1-Nov-05	<1	<1
K7-10	4-Jan-06	<5	<5
K7-10	2-May-06	<1 D	<1 D
K7-10	17-Jul-06	<1	<1
K7-10	2-Oct-06	<1	<1
K7-10	2-Oct-06	<1	<1
MUL2	21-Aug-03	<5	<5
MUL2	28-Jul-04	<5	<5
MUL2	2-Aug-05	<3.4	<3.4
MUL2	25-Jan-06	<1 D	<1 D
MUL2	8-Aug-06	<1	<1
NC7-16	16-Nov-05	<1	<1
NC7-16	16-Nov-05	<1	<1

Table A-13. Ground and surface water analyses for high explosives compounds (μg/L) in samples collected from the Pit 7 Complex between July 1, 2003 and December 31, 2006.

Location	Sample Date	HMX (ug/L)	RDX (ug/L)
NC7-16	17-Oct-06	<1	<1
NC7-21	29-Nov-04	<1	<1
NC7-21	8-Dec-05	<1	<1
NC7-21	18-Oct-06	<1	<1
NC7-25	31-Jul-03	<5	<5
NC7-25	5-Dec-03	<5	<5 O
NC7-25	4-Mar-04	<5	<5
NC7-25	29-Apr-04	<5	<5
NC7-25	22-Jul-04	7.4	<5
NC7-25	1-Sep-04	<5	<5
NC7-25	8-Sep-04	<5	<5
NC7-25	29-Oct-04	<5	<5
NC7-25	25-Jan-05	<5	<5
NC7-25	6-Apr-05	<5 D	<5 D
NC7-25	12-Jul-05	<1	<1
NC7-25	26-Oct-05	<1	<1
NC7-25	5-Jan-06	<5	<5
NC7-25	24-Apr-06	<1	<1
NC7-25	10-Jul-06	<1	<1
NC7-25	4-Oct-06	<1	<1
NC7-26	12-Sep-03	<5	<5
NC7-26	8-Dec-03	<5	<5
NC7-26	27-Jan-04	<5	<5
NC7-26	29-Apr-04	<5	<5
NC7-26	5-Aug-04	<5	<5
NC7-26	2-Nov-04	<5	<5
NC7-26	27-Jan-05	<5	<5
NC7-26	6-Apr-05	<5 D	<5 D
NC7-26	12-Jul-05	<1	<1
NC7-26	20-Oct-05	<1	<1
NC7-26	10-Jan-06	<5	<5
NC7-26	27-Apr-06	<1	<1
NC7-26	10-Jul-06	<1	<1
NC7-26	2-Oct-06	<1 D	<1 D
NC7-34	4-Dec-03	<1	<1
NC7-34	29-Nov-04	<1	<1
NC7-34	22-Nov-05	<1	<1
NC7-34	22-Nov-05	<1	<1
NC7-34	1-Dec-06	<1	<1
NC7-36	6-Dec-04	<1	<1
NC7-36	22-Nov-05	<1	<1
NC7-36	1-Dec-06	<1	<1
NC7-37	28-Nov-06	<1	<1
NC7-40	31-Oct-03	<1	<1
NC7-40	30-Nov-04	<1	<1

Table A-13. Ground and surface water analyses for high explosives compounds (μg/L) in samples collected from the Pit 7 Complex between July 1, 2003 and December 31, 2006.

Location	Sample Date	HMX (ug/L)	RDX (ug/L)
NC7-40	11-Oct-05	<1	<1
NC7-40	18-Oct-06	<1	<1
NC7-40	18-Oct-06	<1	<1
NC7-47	5-Aug-03	<5	<5
NC7-47	5-Dec-03	<5 D	<5 DO
NC7-47	8-Mar-04	<5	<5
NC7-47	26-Apr-04	<5	<5
NC7-47	29-Jul-04	<5	<5
NC7-47	29-Jul-04	<5	<5
NC7-47	28-Oct-04	<5	<5
NC7-47	26-Jan-05	<5	<5
NC7-47	26-Apr-05	<3.4	<3.4
NC7-47	5-Jul-05	<1	<1
NC7-47	5-Jul-05	<1	<1
NC7-47	19-Oct-05	<1	<1
NC7-47	19-Jan-06	<5	<5
NC7-47	4-Apr-06	<1	<1
NC7-47	6-Jul-06	<1	<1
NC7-47	3-Oct-06	<1	<1
NC7-48	5-Aug-03	<5	<5
NC7-48	9-Dec-03	<5	<5
NC7-48	9-Dec-03	<5	<5
NC7-48	9-Mar-04	<5	<5
NC7-48	28-Apr-04	<5	<5
NC7-48	10-Aug-04	<5	<5
NC7-48	2-Nov-04	<5	<5
NC7-48	3-Feb-05	<5	<5
NC7-48	6-Apr-05	<5 D	<5 D
NC7-48	11-Jul-05	<1 E	<1
NC7-48	20-Oct-05	<1 E	<1
NC7-48	13-Jan-06	<5	<5
NC7-48	25-Apr-06	<1	<1
NC7-48	6-Jul-06	<1	<1
NC7-48	2-Oct-06	<1 D	<1 D
NC7-51	10-Oct-05	<1	<1
NC7-51	5-Dec-06	<1 D	<1 D
NC7-51	5-Dec-06	<1	<1
NC7-67	13-Nov-03	<1	<1
NC7-67	19-Nov-04	<1	<1
NC7-67	11-Oct-05	<1	<1
NC7-67	30-Nov-06	<1	<1
NC7-75	3-Dec-03	<1	<1
NC7-75	19-Nov-04	<1	<1
NC7-75	11-Oct-05	<1	<1
NC7-75	1-Dec-06	<1	<1

Table A-13. Ground and surface water analyses for high explosives compounds (μg/L) in samples collected from the Pit 7 Complex between July 1, 2003 and December 31, 2006.

Location	Sample Date	HMX (ug/L)	RDX (ug/L)
SPRING13	20-Dec-04	<5	<5
SPRING13	7-Dec-05	<1	<1
W-865-1804	18-Dec-03	<1	<1
W-865-1804	4-Mar-04	<1	<1
W-865-1804	9-Jun-04	<1	<1
W-PIT7-02	24-Nov-03	<1	<1
W-PIT7-02	1-Dec-04	<1	<1
W-PIT7-02	30-Nov-05	<1	<1
W-PIT7-02	28-Nov-06	<1	<1
W-PIT7-03	25-Nov-03	<1	<1
W-PIT7-03	1-Dec-04	<1	<1
W-PIT7-03	10-Oct-05	<1	<1
W-PIT7-03	5-Dec-06	<1 D	<1 D
W-PIT7-03	5-Dec-06	<1	<1
W-PIT7-10	4-Dec-03	<1	<1
W-PIT7-14	18-Dec-03	<1	<1
W-PIT7-14	9-Mar-04	<1	<1
W-PIT7-1860	31-Oct-05	<1	<1
W-PIT7-1861	31-Oct-05	<1	<1
W-PIT7-2141	16-Nov-05	<1	<1

Notes:

mg/L = Milligrams per liter.
D = Analysis performed at a secondary dilution or concentration (i.e., vapor samples).
E = The analyte was detected below LLNL reporting limit, but above analytical laboratory minimum detection limit.
I = Surrogate recoveries outside of QC limits.
J = Analyte was postively identified; the associated numerical value is approximate concentration of the analyte.
L = Spike accuracy not within control limits.
O = Duplicate spike or sample precision not within control limits.
S = Analytical results for this sample are suspect.

Table A-14. Ground and surface water analyses for PCBs (μg/L) in samples collected from the Pit 7 Complex between July 1, 2003 and December 31, 2006.

Location	Sample Date	PCB 1016 (ug/L)	PCB 1221 (ug/L)	PCB 1232 (ug/L)	PCB 1242 (ug/L)	PCB 1248 (ug/L)	PCB 1254 (ug/L)	PCB 1260 (ug/L)
NC7-34	29-Nov-04	<0.1	<0.1	<0.1	<0.1	<0.1	<0.1	<0.1
NC7-34	22-Nov-05	<0.5	<0.5	<0.5	<0.5	<0.5	<0.5	<0.5
NC7-34	22-Nov-05	<0.48	<0.48	<0.48	<0.48	<0.48	<0.48	<0.48
NC7-34	1-Dec-06	<0.1	<0.1	<0.1	<0.1	<0.1	<0.1	<0.1
NC7-36	6-Dec-04	<0.1	<0.1	<0.1	<0.1	<0.1	<0.1	<0.1
NC7-36	22-Nov-05	<0.51 D	<0.51 D	<0.51 D	<0.51 D	<0.51 D	<0.51 D	<0.51 D
NC7-36	1-Dec-06	<0.1	<0.1	<0.1	<0.1	<0.1	<0.1	<0.1
NC7-37	28-Nov-06	<0.1	<0.1	<0.1	<0.1	<0.1	<0.1	<0.1
NC7-40	31-Oct-03	<0.5	<0.5	<0.5	<0.5	<0.5	<0.5	<0.5
NC7-40	30-Nov-04	<0.1	<0.1	<0.1	<0.1	<0.1	<0.1	<0.1
NC7-40	11-Oct-05	<0.51 D	<0.51 D	<0.51 D	<0.51 D	<0.51 D	<0.51 D	<0.51 D
NC7-40	18-Oct-06	<0.5 D	<0.5 D	<0.5 D	<0.5 D	<0.5 D	<0.5 D	<0.5 D
NC7-40	18-Oct-06	<0.1	<0.1	<0.1	<0.1	<0.1	<0.1	<0.1
NC7-51	10-Oct-05	<0.52 D	<0.52 D	<0.52 D	<0.52 D	<0.52 D	<0.52 D	<0.52 D
NC7-51	5-Dec-06	<0.56 D	<0.56 D	<0.56 D	<0.56 D	<0.56 D	<0.56 D	<0.56 D
NC7-51	5-Dec-06	<0.1	<0.1	<0.1	<0.1	<0.1	<0.1	<0.1
NC7-67	13-Nov-03	<0.5	<0.5	<0.5	<0.5	<0.5	<0.5	<0.5 L
NC7-67	19-Nov-04	<0.2 D	<0.2 D	<0.2 D	<0.2 D	<0.2 D	<0.2 D	<0.2 D
NC7-67	11-Oct-05	<0.47	<0.47	<0.47	<0.47	<0.47	<0.47	<0.47
NC7-67	30-Nov-06	<0.1	<0.1	<0.1	<0.1	<0.1	<0.1	<0.1
NC7-75	3-Dec-03	<0.5	<0.5	<0.5	<0.5	<0.5	<0.5	<0.5
NC7-75	19-Nov-04	<0.1	<0.1	<0.1	<0.1	<0.1	<0.1	<0.1
NC7-75	11-Oct-05	<0.49	<0.49	<0.49	<0.49	<0.49	<0.49	<0.49
NC7-75	1-Dec-06	<0.1	<0.1	<0.1	<0.1	<0.1	<0.1	<0.1
W-PIT7-02	24-Nov-03	<0.5	<0.5	<0.5	<0.5	<0.5	<0.5	<0.5
W-PIT7-02	1-Dec-04	<0.1	<0.1	<0.1	<0.1	<0.1	<0.1	<0.1
W-PIT7-02	30-Nov-05	<0.5	<0.5	<0.5	<0.5	<0.5	<0.5	<0.5
W-PIT7-02	28-Nov-06	<0.1	<0.1	<0.1	<0.1	<0.1	<0.1	<0.1
W-PIT7-03	25-Nov-03	<0.5	<0.5	<0.5	<0.5	<0.5	<0.5	<0.5
W-PIT7-03	1-Dec-04	<0.1	<0.1	<0.1	<0.1	<0.1	<0.1	<0.1
W-PIT7-03	10-Oct-05	<0.49	<0.49	<0.49	<0.49	<0.49	<0.49	<0.49
W-PIT7-03	5-Dec-06	<0.5	<0.5	<0.5	<0.5	<0.5	<0.5	<0.5
W-PIT7-03	5-Dec-06	<0.1	<0.1	<0.1	<0.1	<0.1	<0.1	<0.1
W-PIT7-10	4-Dec-03	<0.5	<0.5	<0.5	<0.5	<0.5	<0.5	<0.5

Notes:

μg/L = Micrograms per liter.

D = Analysis performed at a secondary dilution or concentration (i.e., vapor samples).

L = Spike accuracy not within control limits.

Appendix B

Compliance Monitoring Plan and Substantive Requirements for the Pit 7 Complex Remedial Action

Appendix B

Table of Contents

Table B-1. Pit 7 Complex Ground Water Treatment Facility Effluent Discharge Limits.

Table B-2. Pit 7 Treatment Facility Sampling and Analysis Plan.

Table B-3 Compliance Monitoring Plan for the Pit 7 Complex remedial design.

Substantive Requirements for the Pit 7 Complex Ground Water Extraction and Treatment System Lawrence Livermore National Laboratory Site 300

Table B-1. Pit 7 Complex Ground Water Treatment Facility Effluent Discharge Limits.

Compound	Monthly Median Concentration (μg/L)	Maximum Daily Concentration (μg/L)[1]
Trichloroethylene	0.5	5.0
1,1-Dichloroethylene	0.5	5.0
Total Volatile Organic Compounds[2]	0.5	5.0
Perchlorate[3]	<4	6
Uranium (total)	5.1 pCi/L[4]	20 pCi/L or 30 μg/L
Nitrate (as NO_3)	41,000[5]	45,000

[1] Using EPA Method 601 with a detection limit of 0.5 μg/L or less for halogenated VOCs and EPA Method 300 with a detection limit of 500 μg/L for nitrate.

[2] Total VOCs will be the sum of all VOCs detected above the 0.5 μg/L detection limit.

[3] Using EPA Method 300.0 with a detection limit of 4 μg/L.

[4] Monthly median total uranium activity/concentration limit represents the high end of the range of the receiving water activities/concentrations for total uranium in ground water downgradient of the effluent discharge area.

[5] Nitrate effluent concentration limits are included although influent concentrations are not expected to exceed this concentration.

Table B-2. Pit 7 Treatment Facility Sampling and Analysis Plan.

Sample location	Sample identification	Parameter	Frequency
Influent Port	PIT7-I	VOCs	Quarterly
		Uranium (Total)	Quarterly
		Tritium	Quarterly
		Perchlorate	Quarterly
		Nitrate (as NO_3)	Quarterly
		pH	Quarterly
Effluent Port	PIT7-E	VOCs	Monthly
		Uranium (Total)	Monthly
		Tritium	Monthly
		Perchlorate	Monthly
		Nitrate (as NO_3)	Monthly
		pH	Monthly

Notes:

One duplicate and one blank (given fictitious labels) shall be taken for every 12 samples.

VOCs = Volatile organic compounds.

Table B-3. Compliance monitoring plan for the Pit 7 Complex remedial design.

Sampling location	Location type	Completion interval	Chemical sampling frequency required	Sample driver	Requested analysis	Water level measurement frequency	Comment
Detection Monitor Wells (DMW):							
K7-03	DMW	$Tnbs_0$	S	CMP/RCRA	E300.0:NO3	Q	
K7-03	DMW	$Tnbs_0$	S	CMP/RCRA	E300.0:PERC		
K7-03	DMW	$Tnbs_0$	S	CMP/RCRA	E601		
K7-03	DMW	$Tnbs_0$	Q	CMP/RCRA	E906		
K7-03	DMW	$Tnbs_0$	Q	CMP	MS:UISO		
K7-03	DMW	$Tnbs_0$	A	CMP/RCRA	T26MET		
NC7-24	DMW	Qal/WBR & $Tnbs_0$	S	CMP	E300.0:NO3	15 min. - 6 hr. intervals[a]	Currently dry.
NC7-24	DMW	Qal/WBR & $Tnbs_0$	S	CMP	E300.0:PERC		Currently dry.
NC7-24	DMW	Qal/WBR & $Tnbs_0$	S	CMP	E601		Currently dry.
NC7-24	DMW	Qal/WBR & $Tnbs_0$	Q	CMP	E906		Currently dry.
NC7-24	DMW	Qal/WBR & $Tnbs_0$	Q	CMP	MS:UISO		Currently dry.
NC7-24	DMW	Qal/WBR & $Tnbs_0$	A	CMP	T26MET		Currently dry.
NC7-37	DMW	Qal/WBR	S	CMP	E300.0:NO3	Q	
NC7-37	DMW	Qal/WBR	S	CMP	E300.0:PERC		
NC7-37	DMW	Qal/WBR	S	CMP	E601		
NC7-37	DMW	Qal/WBR	Q	CMP	E906		
NC7-37	DMW	Qal/WBR	Q	CMP	MS:UISO		
NC7-37	DMW	Qal/WBR	A	CMP	T26MET		
NC7-40	DMW	Qal/WBR	S	CMP	E300.0:NO3	Q	
NC7-40	DMW	Qal/WBR	S	CMP	E300.0:PERC		
NC7-40	DMW	Qal/WBR	S	CMP	E601		
NC7-40	DMW	Qal/WBR	Q	CMP	E906		
NC7-40	DMW	Qal/WBR	Q	CMP	MS:UISO		
NC7-40	DMW	Qal/WBR	A	CMP	T26MET		
NC7-48	DMW	Qal/WBR	S	CMP/RCRA	E300.0:NO3	15 min. - 6 hr. intervals[a]	
NC7-48	DMW	Qal/WBR	S	CMP/RCRA	E300.0:PERC		
NC7-48	DMW	Qal/WBR	S	CMP/RCRA	E601		
NC7-48	DMW	Qal/WBR	Q	CMP/RCRA	E906		
NC7-48	DMW	Qal/WBR	Q	CMP	MS:UISO		
NC7-48	DMW	Qal/WBR	A	CMP/RCRA	T26MET		
NC7-51	DMW	Qal/WBR	S	CMP	E300.0:NO3	15 min. - 6 hr. intervals[a]	
NC7-51	DMW	Qal/WBR	S	CMP	E300.0:PERC		
NC7-51	DMW	Qal/WBR	S	CMP	E601		
NC7-51	DMW	Qal/WBR	Q	CMP	E906		
NC7-51	DMW	Qal/WBR	Q	CMP	MS:UISO		
NC7-51	DMW	Qal/WBR	A	CMP	T26MET		
W-PIT3-02	DMW	Qal/WBR	S	CMP	E300.0:NO3	Q	
W-PIT3-02	DMW	Qal/WBR	S	CMP	E300.0:PERC		
W-PIT3-02	DMW	Qal/WBR	S	CMP	E601		
W-PIT3-02	DMW	Qal/WBR	Q	CMP	E906		
W-PIT3-02	DMW	Qal/WBR	Q	CMP	MS:UISO		
W-PIT3-02	DMW	Qal/WBR	A	CMP	T26MET		
W-PIT7-03	DMW	Qal/WBR	S	CMP	E300.0:NO3	Q	
W-PIT7-03	DMW	Qal/WBR	S	CMP	E300.0:PERC		
W-PIT7-03	DMW	Qal/WBR	S	CMP	E601		
W-PIT7-03	DMW	Qal/WBR	Q	CMP	E906		
W-PIT7-03	DMW	Qal/WBR	Q	CMP	MS:UISO		
W-PIT7-03	DMW	Qal/WBR	A	CMP	T26MET		

Table B-3. Compliance monitoring plan for the Pit 7 Complex remedial design.

Sampling location	Location type	Completion interval	Chemical sampling frequency required	Sample driver	Requested analysis	Water level measurement frequency	Comment
Extraction Wells (EW):							
NC7-25	EW	$Tnbs_0$-$Tnsc_0$	Q	CMP/RCRA	E300.0:NO3	Q	
NC7-25	EW	$Tnbs_0$-$Tnsc_0$	Q	CMP/RCRA	E300.0:PERC		
NC7-25	EW	$Tnbs_0$-$Tnsc_0$	Q	CMP/RCRA	E601		
NC7-25	EW	$Tnbs_0$-$Tnsc_0$	S	CMP/RCRA	E906		
NC7-25	EW	$Tnbs_0$-$Tnsc_0$	Q	CMP	AS:UISO		
NC7-63	EW	Qal/WBR	Q	CMP	E300.0:NO3	Q	
NC7-63	EW	Qal/WBR	Q	CMP	E300.0:PERC		
NC7-63	EW	Qal/WBR	Q	CMP	E601		
NC7-63	EW	Qal/WBR	S	CMP	E906		
NC7-63	EW	Qal/WBR	Q	CMP	AS:UISO		
NC7-64	EW	Qal/WBR	Q	CMP	E300.0:NO3	Q	
NC7-64	EW	Qal/WBR	Q	CMP	E300.0:PERC		
NC7-64	EW	Qal/WBR	Q	CMP	E601		
NC7-64	EW	Qal/WBR	S	CMP	E906		
NC7-64	EW	Qal/WBR	Q	CMP	AS:UISO		
W-PIT7-1918	EW	Qal/WBR	Q	CMP	E300.0:NO3	Q	
W-PIT7-1918	EW	Qal/WBR	Q	CMP	E300.0:PERC		
W-PIT7-1918	EW	Qal/WBR	Q	CMP	E601		
W-PIT7-1918	EW	Qal/WBR	S	CMP	E906		
W-PIT7-1918	EW	Qal/WBR	Q	CMP	AS:UISO		
W-PIT7-2305	EW	Qal/WBR & $Tnbs_0$	Q	CMP	E300.0:NO3	Q	
W-PIT7-2305	EW	Qal/WBR & $Tnbs_0$	Q	CMP	E300.0:PERC		
W-PIT7-2305	EW	Qal/WBR & $Tnbs_0$	Q	CMP	E601		
W-PIT7-2305	EW	Qal/WBR & $Tnbs_0$	S	CMP	E906		
W-PIT7-2305	EW	Qal/WBR & $Tnbs_0$	Q	CMP	AS:UISO		
W-PIT7-2306	EW	Qal/WBR	Q	CMP	E300.0:NO3	Q	
W-PIT7-2306	EW	Qal/WBR	Q	CMP	E300.0:PERC		
W-PIT7-2306	EW	Qal/WBR	Q	CMP	E601		
W-PIT7-2306	EW	Qal/WBR	S	CMP	E906		
W-PIT7-2306	EW	Qal/WBR	Q	CMP	AS:UISO		
W-PIT7-2307	EW	Qal/WBR	Q	CMP	E300.0:NO3	Q	
W-PIT7-2307	EW	Qal/WBR	Q	CMP	E300.0:PERC		
W-PIT7-2307	EW	Qal/WBR	Q	CMP	E601		
W-PIT7-2307	EW	Qal/WBR	S	CMP	E906		
W-PIT7-2307	EW	Qal/WBR	Q	CMP	AS:UISO		
Guard Wells (GW):							
K7-09	GW	$Tnsc_0$	A	CMP/RCRA	E906	Q	
NC7-47	GW	$Tnbs_0$-$Tnsc_0$	S	CMP/RCRA	E906	Q	
NC7-50	GW	Tmss	S	CMP	E906	Q	
NC7-75	GW	$Tnsc_0$	S	CMP	E906	Q	
W-865-01	GW	$Tnbs_0$	S	CMP	E906	Q	
W-865-03	GW	$Tnbs_0$	S	CMP	E906	Q	
W-865-04	GW	$Tnbs_0$-$Tnsc_0$	S	CMP	E906	Q	
W-865-2002	GW	$Tnbs_0$-$Tnsc_0$	S	CMP	E906	Q	
Monitor Wells-Plume Tracking (MWPT):							
K7-01	MWPT	Qal/WBR & $Tnbs_0$	S	CMP	AS:UISO;MS:UISO	15 min. - 6 hr. intervals[a]	
K7-01	MWPT	Qal/WBR & $Tnbs_0$	A	CMP/RCRA	E300.0:NO3		
K7-01	MWPT	Qal/WBR & $Tnbs_0$	A	CMP/RCRA	E300.0:PERC		

Table B-3. Compliance monitoring plan for the Pit 7 Complex remedial design.

Sampling location	Location type	Completion interval	Chemical sampling frequency required	Sample driver	Requested analysis	Water level measurement frequency	Comment
K7-01	MWPT	Qal/WBR & $Tnbs_0$	A	CMP/RCRA	E601		
K7-01	MWPT	Qal/WBR & $Tnbs_0$	S	CMP/RCRA	E906		
K7-01	MWPT	Qal/WBR & $Tnbs_0$	A	CMP/RCRA	T26MET		
K7-07	MWPT	Qal/WBR	S	CMP	AS:UISO;MS:UISO	Q	
K7-07	MWPT	Qal/WBR	A	CMP	E300.0:NO3		
K7-07	MWPT	Qal/WBR	A	CMP	E300.0:PERC		
K7-07	MWPT	Qal/WBR	S	CMP	E906		
NC7-12	MWPT	Qal/WBR	S	CMP	AS:UISO;MS:UISO	Q	
NC7-12	MWPT	Qal/WBR	A	CMP	E300.0:NO3		
NC7-12	MWPT	Qal/WBR	A	CMP	E300.0:PERC		
NC7-12	MWPT	Qal/WBR	S	CMP	E906		
NC7-16	MWPT	Qal/WBR	S	CMP	AS:UISO;MS:UISO	15 min. - 6 hr. intervals[a]	
NC7-16	MWPT	Qal/WBR	A	CMP	E300.0:NO3		
NC7-16	MWPT	Qal/WBR	A	CMP	E300.0:PERC		
NC7-16	MWPT	Qal/WBR	A	CMP	E601		
NC7-16	MWPT	Qal/WBR	S	CMP	E906		
NC7-17	MWPT	Qal/WBR	A	CMP	AS:UISO	15 min. - 6 hr. intervals[a]	
NC7-17	MWPT	Qal/WBR	A	CMP	E300.0:NO3		
NC7-17	MWPT	Qal/WBR	A	CMP	E601		
NC7-17	MWPT	Qal/WBR	S	CMP	E906		
NC7-18	MWPT	Qal/WBR	S	CMP	AS:UISO;MS:UISO	Q	
NC7-18	MWPT	Qal/WBR	A	CMP	E300.0:NO3		
NC7-18	MWPT	Qal/WBR	A	CMP	E300.0:PERC		
NC7-18	MWPT	Qal/WBR	S	CMP	E906		
NC7-20	MWPT	Qal/WBR	S	CMP	AS:UISO;MS:UISO	Q	
NC7-20	MWPT	Qal/WBR	A	CMP	E300.0:NO3		
NC7-20	MWPT	Qal/WBR	A	CMP	E300.0:PERC		
NC7-20	MWPT	Qal/WBR	S	CMP	E906		
NC7-21	MWPT	Qal/WBR	S	CMP	AS:UISO;MS:UISO	15 min. - 6 hr. intervals[a]	
NC7-21	MWPT	Qal/WBR	A	CMP	E300.0:NO3		
NC7-21	MWPT	Qal/WBR	A	CMP	E300.0:PERC		
NC7-21	MWPT	Qal/WBR	S	CMP	E906		
NC7-22	MWPT	Qal/WBR	S	CMP	AS:UISO;MS:UISO	15 min. - 6 hr. intervals[a]	
NC7-22	MWPT	Qal/WBR	A	CMP	E300.0:NO3		
NC7-22	MWPT	Qal/WBR	A	CMP	E300.0:PERC		
NC7-22	MWPT	Qal/WBR	A	CMP	E601		
NC7-22	MWPT	Qal/WBR	S	CMP	E906		
NC7-26	MWPT	$Tnbs_0$-$Tnsc_0$	S	CMP/RCRA	AS:UISO;MS:UISO	Q	
NC7-26	MWPT	$Tnbs_0$-$Tnsc_0$	A	CMP/RCRA	E300.0:NO3		
NC7-26	MWPT	$Tnbs_0$-$Tnsc_0$	A	CMP/RCRA	E300.0:PERC		
NC7-26	MWPT	$Tnbs_0$-$Tnsc_0$	A	CMP/RCRA	E601		
NC7-26	MWPT	$Tnbs_0$-$Tnsc_0$	S	CMP/RCRA	E906		
NC7-34	MWPT	Qal/WBR	S	CMP	AS:UISO;MS:UISO	15 min. - 6 hr. intervals[a]	
NC7-34	MWPT	Qal/WBR	A	CMP	E300.0:NO3		
NC7-34	MWPT	Qal/WBR	A	CMP	E300.0:PERC		
NC7-34	MWPT	Qal/WBR	A	CMP	E601		
NC7-34	MWPT	Qal/WBR	S	CMP	E906		
NC7-36	MWPT	Qal/WBR	S	CMP	AS:UISO;MS:UISO	Q	
NC7-36	MWPT	Qal/WBR	A	CMP	E300.0:NO3		
NC7-36	MWPT	Qal/WBR	A	CMP	E300.0:PERC		

Table B-3. Compliance monitoring plan for the Pit 7 Complex remedial design.

Sampling location	Location type	Completion interval	Chemical sampling frequency required	Sample driver	Requested analysis	Water level measurement frequency	Comment
NC7-36	MWPT	Qal/WBR	A	CMP	E601		
NC7-36	MWPT	Qal/WBR	S	CMP	E906		
NC7-47	MWPT	$Tnbs_0$-$Tnsc_0$	A	CMP/RCRA	E300.0:NO3	Q	
NC7-52	MWPT	$Tnbs_0$-$Tnsc_0$	S	CMP	AS:UISO;MS:UISO	Q	
NC7-52	MWPT	$Tnbs_0$-$Tnsc_0$	A	CMP	E300.0:NO3		
NC7-52	MWPT	$Tnbs_0$-$Tnsc_0$	A	CMP	E300.0:PERC		
NC7-52	MWPT	$Tnbs_0$-$Tnsc_0$	A	CMP	E601		
NC7-52	MWPT	$Tnbs_0$-$Tnsc_0$	S	CMP	E906		
NC7-65	MWPT	$Tnbs_0$-$Tnsc_0$	A	CMP	E906	Q	
NC7-67	MWPT	$Tnsc_0$	A	CMP	E906	Q	
NC7-68	MWPT	$Tnbs_0$	S	CMP	AS:UISO;MS:UISO	Q	
NC7-68	MWPT	$Tnbs_0$	A	CMP	E300.0:NO3		
NC7-68	MWPT	$Tnbs_0$	A	CMP	E300.0:PERC		
NC7-68	MWPT	$Tnbs_0$	A	CMP	E601		
NC7-68	MWPT	$Tnbs_0$	S	CMP	E906		
NC7-76	MWPT	Qal/WBR	S	CMP	AS:UISO;MS:UISO	Q	
NC7-76	MWPT	Qal/WBR	A	CMP	E300.0:NO3		
NC7-76	MWPT	Qal/WBR	S	CMP	E906		
W-865-01	MWPT	$Tnbs_0$	A	CMP	E300.0:NO3	Q	
W-865-03	MWPT	$Tnbs_0$	A	CMP	E300.0:NO3	Q	
W-865-1803	MWPT	$Tnbs_0$-$Tnsc_0$	A	CMP	E300.0:PERC	Q	
W-865-1804	MWPT	$Tnbs_0$-$Tnsc_0$	A	CMP	E300.0:NO3	Q	
W-865-1804	MWPT	$Tnbs_0$-$Tnsc_0$	A	CMP	E300.0:PERC		
W-865-1804	MWPT	$Tnbs_0$-$Tnsc_0$	S	CMP	E906		
W-PIT3-01	MWPT	Qal/WBR	S	CMP	AS:UISO;MS:UISO	Q	
W-PIT3-01	MWPT	Qal/WBR	A	CMP	E300.0:NO3		
W-PIT3-01	MWPT	Qal/WBR	A	CMP	E300.0:PERC		
W-PIT3-01	MWPT	Qal/WBR	A	CMP	E601		
W-PIT3-01	MWPT	Qal/WBR	S	CMP	E906		
W-PIT5-01	MWPT	Qal/WBR	S	CMP	AS:UISO;MS:UISO	Q	
W-PIT5-01	MWPT	Qal/WBR	A	CMP	E300.0:NO3		
W-PIT5-01	MWPT	Qal/WBR	A	CMP	E300.0:PERC		
W-PIT5-01	MWPT	Qal/WBR	A	CMP	E601		
W-PIT5-01	MWPT	Qal/WBR	S	CMP	E906		
W-PIT5-02	MWPT	Qal/WBR	S	CMP	AS:UISO;MS:UISO	Q	
W-PIT5-02	MWPT	Qal/WBR	A	CMP	E300.0:NO3		
W-PIT5-02	MWPT	Qal/WBR	A	CMP	E300.0:PERC		
W-PIT5-02	MWPT	Qal/WBR	A	CMP	E601		
W-PIT5-02	MWPT	Qal/WBR	S	CMP	E906		
W-PIT7-02	MWPT	Qal/WBR	S	CMP	AS:UISO;MS:UISO	Q	
W-PIT7-02	MWPT	Qal/WBR	A	CMP	E300.0:NO3		
W-PIT7-02	MWPT	Qal/WBR	A	CMP	E300.0:PERC		
W-PIT7-02	MWPT	Qal/WBR	A	CMP	E601		
W-PIT7-02	MWPT	Qal/WBR	S	CMP	E906		
W-PIT7-10	MWPT	Qal/WBR	S	CMP	AS:UISO;MS:UISO	Q	
W-PIT7-10	MWPT	Qal/WBR	A	CMP	E300.0:NO3		
W-PIT7-10	MWPT	Qal/WBR	A	CMP	E300.0:PERC		
W-PIT7-10	MWPT	Qal/WBR	A	CMP	E601		
W-PIT7-10	MWPT	Qal/WBR	S	CMP	E906		
W-PIT7-11	MWPT	$Tnbs_0$	S	CMP	AS:UISO;MS:UISO	Q	

Table B-3. Compliance monitoring plan for the Pit 7 Complex remedial design.

Sampling location	Location type	Completion interval	Chemical sampling frequency required	Sample driver	Requested analysis	Water level measurement frequency	Comment
W-PIT7-11	MWPT	$Tnbs_0$	A	CMP	E300.0:NO3		
W-PIT7-11	MWPT	$Tnbs_0$	A	CMP	E300.0:PERC		
W-PIT7-11	MWPT	$Tnbs_0$	S	CMP	E906		
W-PIT7-12	MWPT	$Tnbs_0$	S	CMP	AS:UISO;MS:UISO	Q	
W-PIT7-12	MWPT	$Tnbs_0$	A	CMP	E300.0:NO3		
W-PIT7-12	MWPT	$Tnbs_0$	A	CMP	E300.0:PERC		
W-PIT7-12	MWPT	$Tnbs_0$	S	CMP	E906		
W-PIT7-13	MWPT	$Tnbs_0$	S	CMP	AS:UISO;MS:UISO	Q	
W-PIT7-13	MWPT	$Tnbs_0$	A	CMP	E300.0:NO3		
W-PIT7-13	MWPT	$Tnbs_0$	A	CMP	E300.0:PERC		
W-PIT7-13	MWPT	$Tnbs_0$	S	CMP	E906		
W-PIT7-14	MWPT	$Tnsc_0$	A	CMP	E300.0:NO3	Q	
W-PIT7-14	MWPT	$Tnsc_0$	A	CMP	E300.0:PERC		
W-PIT7-14	MWPT	$Tnsc_0$	S	CMP	E906		
W-PIT7-15	MWPT	$Tnbs_0$	A	CMP	AS:UISO	Q	
W-PIT7-15	MWPT	$Tnbs_0$	A	CMP	E300.0:NO3		
W-PIT7-15	MWPT	$Tnbs_0$	S	CMP	E906		
W-PIT7-16	MWPT	$Tnsc_0$	A	CMP	E906	Q	
W-PIT7-2141	MWPT	$Tnbs_0$	A	CMP	E300.0:NO3	Q	
W-PIT7-2141	MWPT	$Tnbs_0$	A	CMP	E300.0:PERC		
W-PIT7-2141	MWPT	$Tnbs_0$	A	CMP	E601		
W-PIT7-2141	MWPT	$Tnbs_0$	S	CMP	E906		
W-PIT7-2309	MWPT	Qal/WBR	S	CMP	AS:UISO;MS:UISO	Q	
W-PIT7-2309	MWPT	Qal/WBR	A	CMP	E300.0:NO3		
W-PIT7-2309	MWPT	Qal/WBR	A	CMP	E300.0:PERC		
W-PIT7-2309	MWPT	Qal/WBR	A	CMP	E601		
W-PIT7-2309	MWPT	Qal/WBR	S	CMP	E906		
Upgradient Monitor Wells (UGMW):							
K7-06	UGMW	Qal/WBR & $Tnbs_0$	A	CMP/RCRA	AS:UISO	15 min. - 6 hr. intervals[a]	
K7-06	UGMW	Qal/WBR & $Tnbs_0$	A	CMP/RCRA	E300.0:NO3		
K7-06	UGMW	Qal/WBR & $Tnbs_0$	A	CMP/RCRA	E300.0:PERC		
K7-06	UGMW	Qal/WBR & $Tnbs_0$	A	CMP/RCRA	E601		
K7-06	UGMW	Qal/WBR & $Tnbs_0$	A	CMP/RCRA	E906		
K7-06	UGMW	Qal/WBR & $Tnbs_0$	A	CMP/RCRA	T26MET		
K7-10	UGMW	$Tnbs_0$	A	CMP/RCRA	AS:UISO	Q	
K7-10	UGMW	$Tnbs_0$	A	CMP/RCRA	E300.0:NO3		
K7-10	UGMW	$Tnbs_0$	A	CMP/RCRA	E300.0:PERC		
K7-10	UGMW	$Tnbs_0$	A	CMP/RCRA	E601		
K7-10	UGMW	$Tnbs_0$	A	CMP/RCRA	E906		
K7-10	UGMW	$Tnbs_0$	A	CMP/RCRA	T26MET		
NC7-49A	UGMW	Qal/WBR	A	CMP	AS:UISO	Q	
NC7-49A	UGMW	Qal/WBR	A	CMP	E300.0:NO3		
NC7-49A	UGMW	Qal/WBR	A	CMP	E300.0:PERC		
NC7-49A	UGMW	Qal/WBR	A	CMP	E906		
NC7-53	UGMW	Qal/WBR	A	CMP	AS:UISO	15 min. - 6 hr. intervals[a]	
NC7-53	UGMW	Qal/WBR	A	CMP	E300.0:NO3		
NC7-53	UGMW	Qal/WBR	A	CMP	E300.0:PERC		
NC7-53	UGMW	Qal//WBR	S	CMP	E906		
W-PIT7-1718	UGMW	Qal/WBR	NR	NA	NA	15 min. - 6 hr. intervals[a]	
W-PIT7-1724	UGMW	Qal//WBR	NR	NA	NA	15 min. - 6 hr. intervals[a]	

Table B-3. Compliance monitoring plan for the Pit 7 Complex remedial design.

Sampling location	Location type	Completion interval	Chemical sampling frequency required	Sample driver	Requested analysis	Water level measurement frequency	Comment
Infiltration Trench Piezometers							
W-PIT7-2419		Infiltration trench	NA	RD	NA	15 min. - 6 hr. intervals[a]	
W-PIT7-2420		Infiltration trench	NA	RD	NA	15 min. - 6 hr. intervals[a]	

Notes:

A = Annually
AS:UISO = Alpha spectrometic analysis of uranium isotopes (Kinetic phosphoresence analysis [KPA] may be substituted).
AS:UISO;MS:UISO = One sample per year analyzed for MS:UISO, remainder analyzed by AS:UISO
CMP = Compliance Monitoring Plan
DMW = Detection Monitor Well
E300.0:NO3 = EPA Method 300.0 nitrate analysis
E300.0:PERC = EPA Method 300.0 perchlorate analysis
E601 = EPA Method 601 volatile organic compounds analysis
E906 = EPA Method 906 tritium analysis
EW = Extraction well
GW = Guard well
MS:UISO = Mass spectrometric analyis of uranium isotopes (AS:UISO may be substituted)
MWPT = Monitoring well, plume tracking
NA = Not applicable
NR = Not required
Q = Quarterly
Qal/WBR = Quaternary alluvium/weathered bedrock
RCRA = Resource Conservation and Recovery Act WDR for Post-Closure Monitoring of Pit 7
RD = Remedial Design
S = Semi-annually
Tmss = Tertiary Cierbo Formation
$Tnbs_0$ = Tertiary Neroly Formation basal blue sandstone unit
$Tnbs_1$ = Tertiary Neroly Formation lower blue sandstone unit
$Tnsc_0$ = Tertiary Neroly Formation basal claystone unit

[a] Water level measurement frequency will be dependent on the rate of water level change; to be determined during initial startup of treatment facility. This frequency of measurement will be adjusted with concurrence from the regulatory agencies after the effect of injection, drainage diversion, and rainfall on ground water elevations is understood.

SUBSTANTIVE REQUIREMENTS
FOR
THE PIT 7 COMPLEX GROUND WATER
EXTRACTION AND TREATMENT SYSTEM
LAWRENCE LIVERMORE NATIONAL LABORATORY SITE 300
U.S. DEPARTMENT OF ENERGY
SAN JOAQUIN COUNTY

The California Regional Water Quality Control Board, Central Valley Region, (hereafter Regional Water Board) finds that:

The U.S. Department of Energy and the Lawrence Livermore National Security, LLC, Lawrence Livermore National Laboratory Site 300, (hereafter jointly referred to as Discharger), are conducting a remedial action at the Pit 7 Complex at Site 300. Although a portion of Site 300 is in Alameda County, the vast majority of Site 300 is in San Joaquin County. Site 300 is located in the Altamont Hills of the North Diablo Range, approximately 20 kilometers southwest of the town of Tracy. A summary of background information is presented below.

Introduction:

1. The Pit 7 Complex is located in the northwest portion of Site 300 and consists of the Pits 3, 4, 5, and 7 landfills. The landfills occupy a broad northwest-southeast trending valley. The longitudinal axes of the landfills are parallel to the valley axis. A shallow ephemeral drainage channel occupies the east side of this valley and extends from the Pit 7 Complex southeast to a point several hundred feet (ft) east of Building 850. Storm water generally runs off slopes and rapidly infiltrates alluvium and colluvium. Water flows in the ephemeral channel during and after high intensity storms. Otherwise, surface water is not observed in the immediate area.

2. These Pit 7 landfills were constructed by excavating topsoil, alluvium, and weathered bedrock to an average depth of 15 to 20 ft (Taffet et al., 1989). The majority of the waste in the pits is firing table debris and gravel from Buildings 850 and 851, where aboveground detonations were conducted. LLNL typically removed gravel from the firing table after it became too compacted to deaden the shock produced during detonations. The waste placed in the pits included this gravel plus wood, plastic, material and debris from tent structures, and exploded test assemblies, some of which contained volatile organic compounds (VOCs), tritium, perchlorate, and depleted uranium. In 1992, LLNL constructed an engineered cap over Pits 4 and 7 in compliance with Resource Conservation and Recovery Act requirements. The cap was designed to prevent infiltration of precipitation and leaching of contaminants.

3. The Pit 7 Complex area is underlain by weathered and fractured sedimentary rocks. A veneer of soil and colluvium covers the western slope, while the eastern slope is steeper and consists of resistant sandstone outcrops. The valley bottom contains an ephemeral drainage channel and associated Quaternary alluvium and weathered

bedrock (Qal/WBR) consisting of fine-grained soil, decomposed bedrock, and colluvium eroded from the hillslopes. The channel extends southeastward to the Building 850 area, where it merges with the northeast-trending drainage channel in Doall Ravine. The bedrock in the Pit 7 Complex area consists primarily of interbedded sandstone, siltstone, conglomerate, and minor claystone of the lower Neroly Formation ($Tnbs_1$). At the base of the $Tnbs_1$ unit is a 10-foot thick silty sandstone unit ($Tnbs_0$). The $Tnbs_0$ unit is overlain by a several foot thick claystone unit and underlain by 50 to 100 feet (ft) of interbedded siltstone, claystone, and minor sandstone ($Tnsc_0$). The $Tnsc_0$ unit overlies sandstone of the Cierbo Formation (Tmss). The interaction between the highly-transmissive Qal/WBR and the less transmissive, underlying bedrock is important to ground water flow and contaminant transport in the Pit 7 Complex area. During periods of heavy rainfall, ground water rises into the bottom of the landfills and underlying contaminated bedrock, releasing tritium, depleted uranium, VOCs, and perchlorate to ground water. Nitrate present in ground water in the Pit 7 Complex area results from a combination of an anthropogenic source in the pit waste and a natural source in the Neroly bedrock.

4. The remedial action to be implemented for ground water at the Pit 7 Complex consists of extraction with VOC removal using aqueous-phase granular activated carbon (GAC) and removal of uranium, nitrate, and perchlorate using ion exchange resins. The extraction wellfield will consist of seven wells, five adjacent to Pits 3 and 5, and two downgradient of Pit 5. Following the removal of uranium, VOCs nitrate, and perchlorate, the treated water will be discharged via an infiltration trench. There is no efficient method for removing tritium from extracted ground water. To prevent increasing the extent of tritium pollution in ground water and the infiltration trench is located in an area where adjacent and underlying ground water in the Qal/WBR contains similar tritium activities to anticipated effluent tritium activities. A map showing the locations of the extraction wells, treatment facility, and infiltration trench is included in Attachment A. Ground water extraction rates are expected to be very low (<0.1 gpm) from the majority of the extraction wells, with the total extraction and discharge rate estimated to be 2 to 3 gpm. Current contaminant concentrations in ground water samples from the extraction wells are as follows:

   - Uranium: 12 to 150 pCi/L
   - Tritium 2,880 to 328,000 pCi/L
   - Perchlorate: < 4 to 16 µg/L
   - Total VOCs: < 0.5 to 9.2 µg/L
   - Nitrate: 24 to 42 mg/L

   Because nitrate concentrations in the combined extracted water are not expected to exceed the maximum contaminant level (MCL) of 45 mg/L, nitrate treatment to attain the MCL is not necessary. However, the ion-exchange resins to be utilized for perchlorate removal also remove nitrate. Thus, if nitrate concentrations in influent water increase above the MCL, the ion exchange resin will reduce nitrate concentrations to below MCLs. Nitrate concentrations will be monitored in influent

and effluent to ensure that effluent nitrate concentrations remain below MCLs in water entering the infiltration trench.

5. The treatment systems are on property owned by the U.S. Department of Energy and are managed under the direction of the Lawrence Livermore National Security, LLC.

6. If the Discharger needs to use ground water discharge locations other than the infiltration trench listed above, discharge locations will be submitted to the Regional Water Board for review and concurrence prior to discharge.

The Discharger, in order to meet the provisions contained in Division 7 of the California Water Code and regulations adopted thereunder, shall comply with the following:

A. Discharge Prohibitions

1. Bypass or overflow of untreated or partially treated wastewater is prohibited.

2. Discharge of waste classified as 'hazardous' or 'designated', as defined in the California Code of Regulations (CCR), Title 23, Chapter 15, Sections 2521(a) and 2522(a) is prohibited. (The treated waste water discharged to the infiltration trench will contain tritium because there is no efficient treatment technology available.)

3. Discharge in violation of State Water Resources Control Board Resolution 68-16 is prohibited.

4. Discharge of treated waste water other than to the infiltration trench is prohibited.

B. Effluent Limitations

1. The discharge of groundwater effluent, in excess of the following limits is prohibited:

Compound	Monthly Median Concentration (µg/L)	Maximum Daily Concentration (µg/L)[1]
Trichloroethylene	0.5	5.0
1,1-Dichloroethylene	0.5	5.0
Total Volatile Organic Compounds[2]	0.5	5.0
Perchlorate[3]	<4	6
Uranium (total)	5.1 pCi/L[4]	20 pCi/L or 30 µg/L
Nitrate (as NO_3)	41,000[5]	45,000

[1] Using EPA Method 601 with a detection limit of 0.5 µg/L or less for halogenated VOCs and EPA Method 300 with a detection limit of 500 µg/L for nitrate.

[2] Total VOCs will be the sum of all VOCs detected above the 0.5 µg/L detection limit.

[3] Using EPA Method 300.0 with a detection limit of 4 µg/L.

[4] Monthly median total uranium activity/concentration limit represents the high end of the range of the receiving water activities/concentrations for total uranium in ground water downgradient of the effluent discharge area.

[5] Nitrate effluent concentration limits are included although influent concentrations are not expected to exceed this concentration.

2. The discharge of individual VOCs other than those listed in B.1 above in excess of the 5.0 µg/L maximum daily concentration and the 0.5 µg/L monthly median concentration as determined by EPA Method 601 is prohibited.

3. All chromatograph peaks for EPA Method 601 shall be identified.

4. Treated ground water will not have a pH of less than 6.5 or greater than 8.5.

5. The Discharger shall use the best practicable cost-effective control technique currently available to limit mineralization to no more than a reasonable increment.

C. Discharge Specifications

1. SYSTEM CHECK

Prior to operating the groundwater treatment system with contaminated groundwater, a system check shall be conducted to confirm the proper construction and operation of the treatment system. The following minimum requirements apply to this system check phase:

a. A conformance inspection shall be conducted to confirm that all equipment, piping, instrumentation, and control systems of the ground water treatment system have been installed according to the approved design. Any deficiencies in the ground water treatment system shall be corrected.

b. To confirm piping integrity, piping of the collection system and treatment system shall be pressure-tested at 150 percent of the design pressure with potable water. Any leaks shall be repaired.

c. All instrumentation, control systems, and equipment shall be inspected for malfunctions. All automatic controls, such as shutdown or alarm switches necessary for the operation of each treatment system phase, shall be certified operational prior to startup of that phase. Mechanical equipment, such as pumps, air blowers, and valves, required for the operation of the treatment phases, will be cycled or operated. Any functional deficiencies shall be corrected.

2. FULL SCALE OPERATION

a. All extracted ground water will be treated by the treatment systems and discharged directly to the infiltration trench.

b. The Discharger shall operate the treatment systems to maximize the removal of all COCs from the extracted ground water, with the exception of nitrate when already below discharge limits and tritium for which there is no efficient treatment technology available.

c. The system operations shall be monitored in accordance with the full-scale operational phase monitoring plan in the Pit 7 Complex Remedial Design report until superceded by the revised 2009 Compliance Monitoring Plan.

d. All treatment, transport, and disposal components (including pumping valves, liquid level controllers, pipelines, blowers, flow meters, pressure gauges, etc.) will be inspected for leaks and/or malfunctions each business day that the system is operational during manual operations and weekly during automated operation.

3. DURING ALL PHASES OF OPERATIONS

   a. Neither the treatment nor the discharge shall cause a nuisance or condition of pollution as defined by the California Water Code, Section 13050.

   b. The discharge shall not cause degradation of any water supply. (Note: Because there is no treatment technology available to remove tritium from ground water, the tritium-bearing effluent will be reintroduced to the same water-bearing strata from which it was extracted via the infiltration trench and allowed to naturally attenuate per the remedy selected in the Amendment to the Site-Wide Interim Record of Decision for the Pit 7 Complex.)

   c. Any collected screenings, sludge, and other solids removed from liquid wastes shall be disposed of in a manner consistent with CCR Title 23,Chapter 15, Division 3.

D. Provisions

1. The Discharger shall not allow pollutant-free wastewater to be discharged into the collection, treatment, and disposal system in amounts that significantly diminish the system's capability to comply with these Substantive Requirements. Pollutant-free wastewater means rainfall, groundwater, cooling waters, and condensates that are essentially free of pollutants.

2. No runoff or overflow from the discharge locations will occur, and to safeguard this, weekly monitoring of the discharge areas will be conducted to determine whether runoff is occurring.

3. The Discharger may be required to submit technical reports as directed by the Regional Water Board staff.

4. The Discharger shall comply with the monitoring and reporting program outlined in the Remedial Design report for the Pit 7 Complex, i.e., monitoring frequency, locations, constituent changes, etc. When the Site-Wide Compliance Monitoring Plan is revised in 2009, the monitoring and reporting requirements for the Pit 7 Complex will be incorporated into that document.

5. The Discharger shall notify the Regional Water Board immediately, during normal working hours via telephone, and at least within 24 hours of any spill of untreated ground water. This notification shall include the size and cause of the spill, any immediate damage to the environment, any corrective/cleanup actions taken and/or additional monitoring proposed.

6. The Discharger shall notify the Regional Water Board within seven days of any changes in treatment systems or methods or problems which cause a shutdown of the system.

7. The Discharger shall submit to the Regional Water Board, DTSC, and the U.S. EPA operation and status reports for the extraction and treatment facility in the semi-annual Site-Wide Compliance Monitoring Reports. These operational reports shall contain a summary of operating parameters, operation and maintenance activities, and any shut down or spill events that occurred during the quarter.

8. The Discharger shall comply with the "Standard Provisions and Reporting Requirements for Waste Discharge Requirements", dated 1 March 1991, which are attached hereto and by reference a part of these Substantive Requirements except for those Provisions and Requirements which are superceded by CERCLA requirements. This attachment and its individual paragraphs are commonly referenced as "Standard Provisions".

9. The Discharger shall report promptly to the Regional Water Board any material change or proposed change in the character, location, or volume of the discharge.

10. In the event of any change in ownership of land or waste discharge facilities presently owned or controlled by the Discharger, and associated with the groundwater cleanup of the Pit 7 Complex, the Discharger shall notify at that time the succeeding owner or operator of the existence of these Substantive Requirements by letter. A copy of the notification shall be forwarded to the Regional Water Board.

11. A copy of the Substantive Requirements shall be kept at the discharge facility for reference by operating personnel. Key operating personnel shall be familiar with its contents.

12. Regional Water Board staff will review these Substantive Requirements periodically and may revise them. The Discharger shall be notified prior to the review of these Substantive Requirements by the Regional Water Board, and shall have the opportunity to review and comment on the proposed changes.

Attachment 1

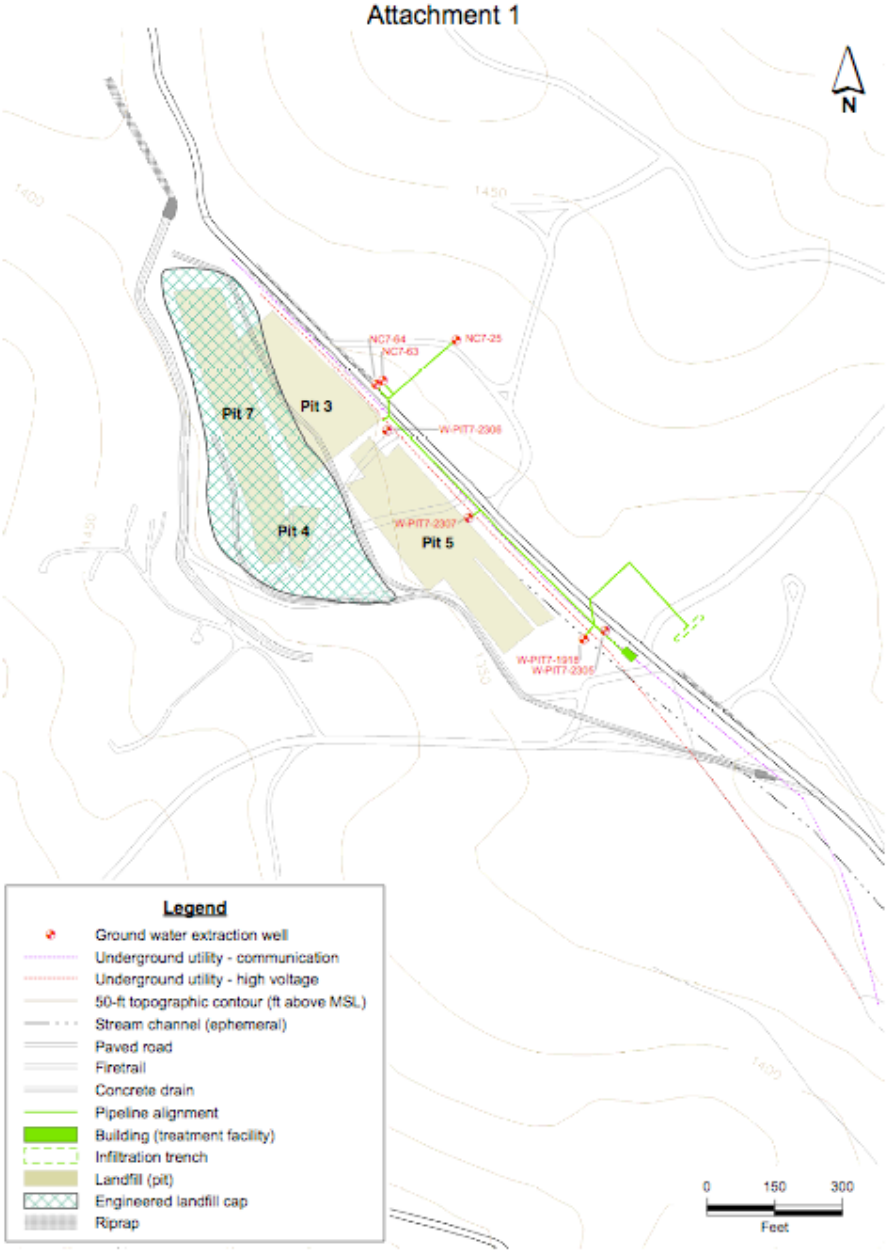

Location of the Pit 7 Complex ground water extraction and treatment system and effluent infiltration trench.

Appendix C

Summary of Ion-Exchange Resin for Uranium Treatment

Appendix C

Summary of Ion-Exchange Resins for Uranium Treatment at the Pit 7 Complex

Extracted ground water at the Pit 7 Complex will flow to the treatment system at maximum rates of 2 to 3 gallons per minute (gpm). Prior to entering the treatment media, the water will pass through a five-micron filtration system to remove suspended particles. The influent water will then be piped to three aqueous-phase granular activated carbon (GAC) canisters to remove volatile organic compounds (VOCs). Following treatment for VOC removal, the water will enter three ion-exchange resin canisters for uranium removal. Each ion-exchange canister will be filled with approximately 2.5 cubic feet of US Filter/Siemens type USF A-284 strong base anion (SBA) ion-exchange resin. SBA resins have been routinely used in the mining industry since the 1950s to harvest uranium from uranium ore and mining solutions extracted from sandstone-hosted uranium-bearing mineral deposits (Greer et al., 1958) and have been used in recent years for the treatment of uranium-bearing ground water. Lawrence Livermore National Laboratory (LLNL) contacted US Filter/Siemens for additional product information for this resin formulation, which they recommended for use in the Pit 7 ground water treatment system.

A data sheet presenting the manufacturer's specification for the US Filter/Siemens type USF A-284 SBA ion-exchange resin is shown in Figure C-1. However, the data sheet does not specifically reference the target solutes for the SBA ion-exchange resin. Several papers documenting the effectiveness of uranium removal by similar SBA resins include Greer at al. (1958), Clifford and Zhang (1994), Zhang and Clifford (1994), Huikiri and Salonen (2000), and Gu et al. (2005). Uranium is a metal. These resins are particularly effective in removing uranium in anionic form, which is typical in slightly alkaline water such as that at the Pit 7 Complex where the dominant dissolved uranium species are $UO_2(CO_3)_2^{-2}$ and $UO_2(CO_3)_3^{-4}$ (Taffet et al., 2005). The resins can reduce uranium concentrations/activities to less than several picocuries per liter (pCi/L) or micrograms per liter (µg/L) (Huikuri and Salonen, 2000). The capacity of the resin is about 12 grams of uranium per cubic foot (g/ft^3) of resin.

Figure C-2 is from Gu et al. 2005, and shows the capacity of sorption of uranium for six strong base anion resins that are similar in composition to the USF A-284 resin that will be used at the Pit 7 treatment facility. The solutions used in the experiments are similar in ionic strength to ground waters. There are three bar graphs for each resin. The similarity in the bar graphs for each resin indicates that sulfate concentration does not affect uranium sorption. These resins all have a high affinity for uranium with capacities on the order of 30 g/ft^3 (or 0.067 g U/g resin). Gu et al. used an initial uranium concentration of 14 milligrams per liter (mg/L) in the experiments. Nearly all the uranium was quantitatively sorbed to all the resins used in the experiments. The estimated uranium influent concentration to the Pit 7 treatment facility is approximately 0.1 mg/L, significantly lower than uranium concentrations used in the experiments.

The 12 g/ft^3 capacity for sorption of uranium onto USF A-284 is a conservative estimate, as the resins will be replaced before breakthrough of uranium. The resins shown on Figure C-2 have a slightly higher capacity than the USF A-284 resin. However, the 12 g/ft^3 sorption

capacity of the USF A-284 is sufficient for the estimated uranium influent concentrations to the Pit 7 treatment facility (0.1 mg/L).

Following treatment to remove VOCs and uranium, water in the Pit 7 treatment facility will flow through three ion-exchange resin canisters connected in series to remove perchlorate and nitrate (as needed) prior to discharge.

References

Clifford, D.A. and Z. Zhang (1994) *Modifying ion exchange for combined removal of uranium and radium*, Journal of the American Water Works Association, v.86, pp. 214-227.

Greer, A.H., A.B. Mindler, and J.P. Termini (1958) *New Ion Exchange Resin for Uranium Recovery*, Industrial and Engineering Chemistry, v.50, n.2, pp. 166-170.

Gu, B., Y. Ku, and G.M. Brown (2005) *Sorption and Desorption of Perchlorate and U(VI) by Strong-Base Anion-Exchange Resins*, Environmental Science and Technology, v.39, pp. 901-907.

Huikiri, P. and L. Salonen (2005) *Removal of uranium from Finnish groundwaters in domestic with a strong base anion resin*, Journal of Radioanalytical and Nuclear Chemistry, v.254, n.2, pp. 385-393.

Taffet, M.J., L., Ferry, V. Madrid, T. Carlsen, Z. Demir, J. Valett, M. Dresen, W. Daily, S. Coleman, and V. Dibley (2005), *Final Remedial Investigation/Feasibility Study for the Pit 7 Complex at Lawrence Livermore National Laboratory Site 300*, Lawrence Livermore National Laboratory, Livermore, Calif. (UCRL-AR-202492).

Zhang, Z. and D.A. Clifford (1994), *Exhausting and regenerating resin for uranium removal*, Journal of the American Water Works Association, v.86, pp. 228-241.

USF A-284 ANION RESIN

Description:

USF A-284 is a strong base Type I gel anion resin consisting of a styrene divinylbenzene matrix. The general appearance is a hard spherical bead which is amber in color. This resin has the ability to remove anions and weak acids from aqueous solutions, such as carbonic and silicic acids. This resin is particularly well-suited for low silica effluent requirements.

Chemical Properties

Ionic Form (as shipped)	Chloride
Moisture Content	43 - 48% (Cl form)
Exchange Capacity	1.4 meq / ml minimum (Cl form)
Kinetics	> 15 megohm (USFilter Kinetics Test)

Physical Properties

Particle Screen Sizing	
+16 Mesh	5% maximum
-50 Mesh	1% maximum
Effective Size	0.45 - 0.60 mm
Whole Beads (%)	90 minimum
Shipping Weight	44 lbs. / cu. ft.

Operating Conditions

Operating pH Range	0 to 14
Service Flow Rate	2 - 4 gpm / cu. ft.
Regenerant Flow Rate	0.25 - 0.5 gpm / cu. ft.
Rinse Flow Rate	0.25 - 0.5 gpm / cu ft. initially, then 1.5 gpm / cu. ft.
Rinse Volume	60 - 75 gallons / cu. ft.
Maximum Operating Temperature	140°F

TECH SHEET MED-301

Figure C-1. US Filter/Siemens type USF A-284 SBA ion-exchange resin specification sheet.

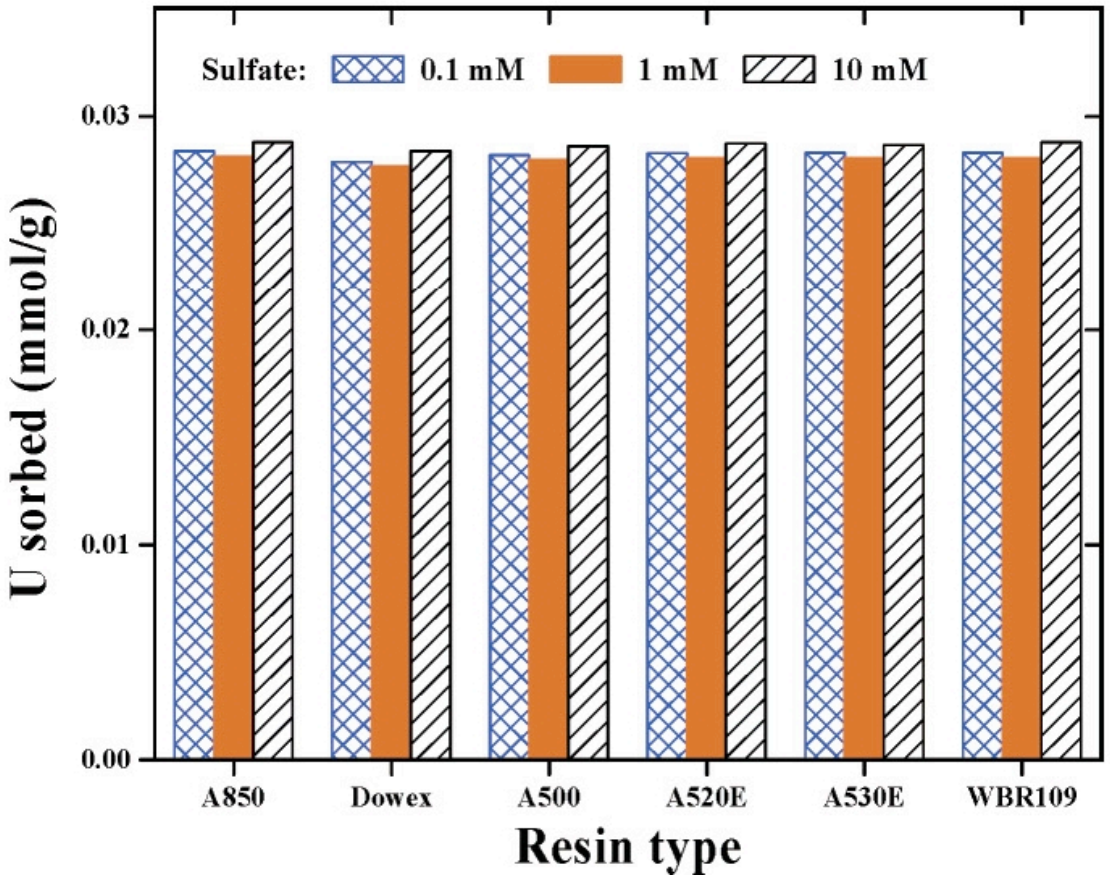

Figure C-2. Sorption of uranium by various synthetic resins at three different sulfate concentrations (Reprinted from Gu et al., 2005).

Appendix D

Construction Quality Assurance/ Quality Control Plan

Appendix D

Construction Quality Assurance/Quality Control Plan

D-1. Introduction

This Quality Assurance/Quality Control (QA/QC) Plan has been developed in support of the construction of the Pit 7 Complex ground water extraction and treatment system and drainage diversion system. The purpose of this plan is to define quality objectives and areas of responsibility in accordance with the requirements for the construction of the extraction and treatment facility and drainage diversion system. This plan has been developed to comply with Lawrence Livermore National Laboratory (LLNL) QA policy and to address the applicable elements of U.S. Department of Energy (DOE) Order 414.1B (DOE, 2004). A matrix comparing the elements of this plan to the U.S. Environmental Protection Agency (EPA) requirements for Quality Assurance Project Plans (QA/G-5)(U.S. EPA, 1998) is provided in Table D-1.

The objectives of the project supported by this QA/QC plan are to:

- Assure excellence in construction design and implementation.
- Provide the QA/QC requirements to meet all programmatic and institutional needs.

This QA/QC plan defines the process for providing confidence that these QA/QC objectives will be achieved and that achievement will include due consideration for health, safety, property, and the environment.

D-2. Quality Assurance Program

The LLNL Site 300 Environmental Restoration Project's QA Program is based on the following QA documents:

- DOE Order 414.1B, Quality Assurance Program (DOE, 2004).
- LLNL Environmental Protection Department (EPD) Quality Assurance Management Plan (QAMP) (LLNL, 2006).
- LLNL Environmental Restoration Project Quality Assurance Project Plan (QAPP) (Dibley, 1999).
- LLNL Livermore Site and Site 300 Environmental Restoration Project Standard Operating Procedures (SOPs) (Goodrich and Wimborough, 2006).

Table D-1 shows the 10 elements of the EPD QAMP, which implements DOE Order 414.1B, and their applicability to construction related activities for the Pit 7 Complex ground water extraction and treatment system and drainage diversion system. The Construction QA/QC Plan follows the Environmental Restoration Project QAPP approved by the U.S. EPA.

D-2.1. Organization

This section documents the organizational structure, functional responsibilities, and lines of communication for those aspects of construction related activities for the Pit 7 Complex ground water extraction and treatment system and drainage diversion system that affect quality.

Figure D-1 shows the organizational structure for construction QA/QC activities. The descriptions below generally describe the QA/QC responsibilities of those involved in carrying out the QA/QC program for the construction of the Pit 7 Complex ground water extraction and treatment system and drainage diversion system. Project personnel as shown in Figure D-1 have the following responsibilities:

- The U.S. DOE is the Principal Responsible Party for Comprehensive, Environmental Response, Compensation and Liability Act (CERCLA) related activities at the LLNL Site 300. Environmental restoration activities at Site 300 are conducted by Lawrence Livermore National Security, LLC staff in the LLNL Environmental Restoration Division (ERD), hereafter referred to as LLNL, under the direction of the DOE Site 300 Remedial Project Manager (RPM). The DOE RPM coordinates these activities through the U.S. EPA, and California Department of Toxic Substances Control and the Regional Water Quality Control Board (RWQCB) Remedial Project Managers (RPMs).
- The LLNL EPD Quality Assurance Manager provides oversight and monitors QA related activities of divisions within the EPD, including ERD. The Quality Assurance Manager reports the results of quality verification to the EPD Department Head who, in turn, relays this information to DOE.
- The LLNL ERD Division Leader is responsible for implementing the EPD and ERD QA programs as it relates to activities in the division and ensuring that nonconforming conditions are promptly addressed and documented. The ERD Division Leader reports to both the EPD Department Head and to DOE.
- The LLNL ERD Site 300 Project Leader is responsible for ensuring that approved procedures related to QA are used during activities in the project and division and ensuring that nonconforming conditions are promptly addressed and documented. The Site 300 Project Leader issues the QA/QC plan and periodically reviews its implementation. The Site 300 Project Leader reports to the ERD Division Leader on QA conformance and other QA-related issues.
- The LLNL ERD Quality Assurance Implementation Coordinator is responsible for the development and implementation for the QA/QC plan, establishment and control of the applicable QA/QC requirements, coordination with appropriate project personnel to assure compliance within groups over which the quality organization has no administrative control, and development of tracking and reporting systems to provide management visibility of implementation activities and results. The Quality Assurance Implementation Coordinator maintains direct communication and liaison with the EPD Quality Assurance Manager and has line authority through the ERD Division Leader for the implementation of the QA Program within the division.
- The LLNL Quality Assurance Engineer is responsible for providing direction to the Subproject Leader, Remediation Engineer, and Technician Supervisor in the selection

and installation of the equipment and remediation systems to meet QA objectives and ensuring that construction meets design criteria specified in the design documents. The Quality Assurance Engineer reports directly to the Quality Assurance Implementation Coordinator on construction QA/QC related activities.

The Quality Assurance Implementation Coordinator and Quality Assurance Engineer constitute the independent quality assurance reviewers as defined in the EPD Quality Assurance Management Plan. The Quality Assurance Management Plan requires that design/technical reviews are conducted by competent, independent reviewers other than those involved in the original design activity although they may be from the same organization. Additional QA audits of ERD activities are regularly conducted by DOE. The ERD Division Leader may assign an outside (non-LLNL), independent QA team as appropriate (i.e., when the necessary technical expertise to conduct design review is not available within the LLNL organization).

- The LLNL Remediation Engineer is responsible for writing design criteria for equipment and flow rates to treat water, as well as providing oversight for construction activities. The Remediation Engineer is the equivalent to the Remedial Design Engineer. The Remediation Engineer reports to the Project Leader regarding facility design and construction.
- The LLNL Plant Engineering Project Manager (PEPM) is responsible for overall management of design and construction activities for the drainage diversion system. The PEPM reports design and construction activities to the ERD Site 300 Project Leader. The PEPM is Plant Engineering's primary contact with ERD for the assigned project. He/she is responsible for the overall coordination and execution of the drainage diversion system construction project.
- The LLNL Plant Engineering Construction Manager (PECM) is responsible for overseeing design and construction activities for the drainage diversion system. The PEPM reports during design and construction activities to the ERD Site 300 Project Leader and to the PEPM. The PECM serves as the intermediary between LLNL and the design and construction contractor of the drainage diversion system construction project. He/she is responsible for inspecting the construction of the drainage diversion system to ensure that it is built as designed.
- The LLNL ERD Technician Supervisor is responsible for the supervision and oversight of day-to-day construction activities. The Technician Supervisor is the equivalent to the Remedial Action Constructor. The Technician Supervisor reports to the Project Leader regarding construction-related activities.

D-3. Training and Qualifications

Personnel supporting Environmental Restoration Projects are trained to ensure that they have the skills and knowledge necessary to perform their work assignments in a safe, competent, uniform, and environmentally sound manner. LLNL and in-house subcontractor technicians performing treatment facility construction activities shall comply with the EPD's Training Management Plan, the Safety and Security Directorate Training Implementation Plan, and the LLNL Training Program Manual. In addition to regulatory-driven training such as hazardous

waste operations and emergency response certification, Superfund Amendments and Reauthorization Act/Occupational Safety and Health Administration (SARA/OSHA), and the Environment, Safety, and Health courses provided by LLNL, technicians also receive on-the-job training for their specific work tasks. All training is tracked and recorded by the LLNL Training Department.

The construction contractor and the design firm for the Pit 7 drainage diversion system have satisfactorily completed recent jobs and contracts similar in type and complexity to the scope of work for the Pit 7 Complex drainage diversion project. The Project Manager for the drainage diversion construction contractor has specific experience with sequencing and coordinating work operations of projects similar in nature to the Pit 7 drainage diversion project. The general superintendent for the contractor has a working knowledge of Federal and State codes, regulations, and standards and is able to implement these in the field. The general superintendent has a history of successfully directing similar work and is current on OSHA 30-hour training. The construction contractor safety officer has a history of preventing project safety violations and incidents, and has a thorough knowledge of the current contents of 10 Code of Federal Regulations (CFR) 1900 through 1926.

D-4. Quality Improvement

ERD technicians integrate quality improvement into all construction activities by communicating to management, per the requirements of SOP 4.12, "Quality Improvement Forms", any unsafe practice or nonconforming item or process (e.g., faulty material, malfunctioning equipment, process defects, data irregularities, and deviations from standard operating procedures) that could potentially compromise worker safety or the activity's deliverable. The technicians also identify and communicate methods to improve quality or achieve greater efficiency of the remedial systems under construction.

The design of the Pit 7 Complex drainage diversion was reviewed at multiple stages by ERD and Plant Engineering Department technical personnel to ensure that the design would be constructible, durable, require minimal maintenance, comply with all specifications, and be effective in maintaining ground water elevations below the landfills and underlying contaminated bedrock. The design was also reviewed at 65% and 100% completion by a diverse cadre of LLNL technical professionals to further ensure that the final design and construction is of the highest quality with the best opportunity for excellent performance. Construction managers will evaluate further opportunities for quality improvement during construction.

D-5. Documents and Records

Documents and records have been developed and controlled in a manner that ensures availability to EPD managers and workers so that they can perform their assigned responsibilities safely and properly per the requirements of SOP 4.18, "ERD Document Control". Records are retained so that the basis of technical and regulatory decisions can be adequately defended.

D-6. Work Processes

All work must be authorized before commencing and work activities be conducted under conditions and controls that ensure worker safety and provide assurance that quality is achieved. Work processes will be performed per approved procedures.

D-6.1. Identification and Control of Items

Material delivered to the treatment facility and drainage diversion job sites is inspected to verify compliance with the approved design submittals to assure that only correct and accepted items are used or installed.

The LLNL Technician Supervisor and LLNL Plant Engineering Construction Manager will request identification and inspection of items arriving at the construction sites, when required. Acceptance of items or materials not in conformance with the design requirements shall be approved by the QA Engineer or Technician Supervisor (for the treatment system) or the LLNL Construction Manager (for the drainage diversion system).

Samples, generated as part of the construction activities will be assigned unique identifiers. Documented traceability of sample identifiers is maintained throughout the handling of samples. Such documented traceability is referred to as the chain-of-custody process for samples and is described in SOP 4.2, “Sample Control and Documentation”.

D-6.2. Handling, Storing, and Shipping of Items

Procedures have been developed to ensure that items associated with construction activities are handled, stored, and shipped to prevent damage, loss, or deterioration.

Environmental samples will be handled, stored, and shipped per the requirements of SOP 4.3, “Sample Containers and Preservation” and SOP 4.4, “Guide to the Handling, Packaging and Shipping of Samples”.

D-7. Design Control

If during the course of construction, design changes are necessary, these changes must be controlled in accordance with the following requirements:

- Changes to final designs, field changes, and nonconforming items dispositioned “use as is” or “repair” must be justified and must be subject to design control measures commensurate with those applied to the original design.
- Design control measures for changes must include provisions to ensure that the design analyses for the item are still valid.
- Changes must be approved by the same groups or organizations that reviewed and approved the original design documents.
- If a significant design change becomes necessary because of an incorrect original design or because conditions in the field are different from those originally anticipated, the design process and design verification methods and implementing procedures must be reviewed and modified, as appropriate. These design deficiencies must be documented

according to the requirements provided using the organization's nonconformance reporting process.

- Field changes must be incorporated into the applicable design documents.
- Design changes that affect related implementing procedures or training programs must be communicated to the appropriate organizations.

D-8. Inspection and Acceptance Testing

All ground water extraction and treatment facility and drainage diversion system construction work is subjected to inspection.

For the treatment facility inspections, the QA Engineer shall immediately stop work and notify the Site 300 Project Leader and Remediation Engineer if the work does not meet design criteria or quality requirements. After construction, the QA Engineer shall verify the accuracy of the as-built drawings to the final constructed facility.

The Technician Supervisor and Remediation Engineer shall maintain cognizance of incoming and stored materials and items and inspect or test them for conformance to requirements, as necessary. They shall tag rejected items to ensure that they are not inadvertently used.

Lockout tags shall be tied on electrical equipment, lifts and hoists, valves, etc. where such items (1) are unsafe to use, (2) are uncertified, or (3) may pose a risk to personnel working on the system per the requirements of SOP 4.16, "ERD Lockout/Tag Program".

For the drainage diversion system inspections, the LLNL Plant Engineering Department Construction Manager shall immediately stop work and notify the Site 300 Project Leader and LLNL Plant Engineering Project Manager if the work does not meet design criteria or quality requirements. After construction, the Plant Engineering Department Construction Manager shall verify the accuracy of the as-built drawings to the final constructed drainage diversion system, prior to accepting and certifying the construction as complete.

D-9. Assessment/Verification

D-9.1. System Check

For the drainage diversion system, the only post-construction assessment and verification activity will be the flushing of water into all the drainage cleanouts to assure that all subsurface piping is free of any defects or clogging.

Prior to operating a new or modified ground water extraction and treatment system, a system check will be conducted to confirm the proper construction and operation of the treatment system. The following minimum requirements apply to this system check phase:

- A conformance inspection will be conducted to confirm that all equipment, piping, instrumentation, and control systems of the treatment system have been installed according to the approved design. Any deficiencies in the treatment system will be corrected.

- To confirm piping integrity, piping of the collection system and treatment system will be tested. Any leaks will be repaired.
- All instrumentation, control systems, and equipment will be inspected for malfunctions. All automatic controls, such as shutdown or alarm switches necessary for the operation of each treatment system phase, will be inspected for operational readiness prior to startup of that phase. Mechanical equipment, such as pumps and valves, required for the operation of the treatment phases, will be cycled or operated. Any functional deficiencies will be corrected.

D-9.2. Proof-of-System Check

After the system check has been conducted and any deficiencies corrected, a proof-of-system check will be conducted to ensure that the extraction wellfield and treatment system will remove and treat contaminated ground water or soil vapor to meet regulatory effluent discharge limits. The proof-of-system check will consist of the following elements:

- The proof-of-system check will last long enough to demonstrate that contaminated ground water or soil vapor has been extracted from each extraction well and has been treated by the treatment system to meet effluent discharge limitations.
- Each of the new extraction wells will be pumped long enough to confirm that the ground water pumps and water level shutoff devices operate properly.
- The treated ground water will be analyzed for uranium, volatile organic compounds (VOCs), nitrate, and perchlorate, as appropriate, after passing through the treatment system.
- If analysis show that ground water contaminant concentrations are above the effluent discharge limitations, the treatment system will be modified until the concentrations are within Substantive Requirements for discharge provided by the RWQCB.
- All treatment, transport, and disposal components (including pumps, valves, liquid level controllers, pipelines, flow meters, pressure gauges, etc.) will be inspected for leaks and/or malfunctions. In addition, the system's automatic controls will be inspected for operational readiness. All mechanical equipment will be operated under load to assure proper performance. Any deficiencies will be corrected.

D-9.3. Proof-of-System Monitoring

Proof-of-system monitoring will be conducted to characterize changes to the treatment system influent and effluent stream as a result of connecting new extraction wells, to determine the treatment efficiencies of new treatment systems, and to monitor the performance of the new extraction wells.

During the proof-of-system monitoring, the following analyses or measurements will be conducted:

- Total volume of water extracted from each new extraction well.
- Water levels in the new extraction wells.
- Total volume of water treated.

- Analysis of ground water treatment system effluent samples for uranium VOCs, nitrate, and perchlorate, as appropriate, as well as pH.

The quality of the data generated as part of the proof-of-system testing will be assessed following the data quality assessment procedures outlined in Section 3.1.3 and Section 4 (Data Validation and Usability) of the ERD QAPP.

D-9.4. Measurement and Testing Equipment Calibration and Verification

All Measurement and Test Equipment used in acceptance testing of electronic, monitoring, and interlock systems and items will be calibrated in accordance with the applicable LLNL or manufacturer's calibration manual or LLNL SOP 4.8, "Calibration/Verification and Maintenance of Field Instruments Used in Measuring Parameters of Surface Water, Ground Water, and Soils", as appropriate. The individual conducting the test will be responsible for assuring that all test equipment is calibrated and within its certification period.

D-10. References

Dibley, V. (March 1999), *Environmental Restoration Division, Quality Assurance Project Plan, Livermore Site and Site 300 Environmental Restoration Projects*, Lawrence Livermore National Laboratory, Livermore, Calif. (UCRL-AR-103160 Rev. 2).

Goodrich, R., and J. Wimborough (Eds.) (2006), *LLNL Livermore Site and Site 300 Environmental Restoration Project Standard Operating Procedures (SOPs),* Lawrence Livermore National Laboratory Livermore, Calif. (UCRL-MA-109115 Rev. 12).

LLNL (2006) *Environmental Protection Department Quality Assurance Management Plan*, *Rev. 4*, Lawrence Livermore National Laboratory, Livermore Calif.

LLNL (1989), Construction Manager Manual - Subcontracted Construction Projects, Plant Engineering Department.

LLNL (1990), Construction Inspector's Policy and Procedure Manual, Plant Engineering Department.

U.S. DOE (2004), DOE Order 414.1B, Quality Assurance Program, Office of Nuclear Safety Policy and Standards.

U.S. Environmental Protection Agency (1998), Guidance for Quality Assurance Project Plans (QA/G-5), EPA/600/R-98/018, Office of Research and Development.

Table D-1. Applicability of the EPD QAMP elements to the construction of Pit 7 Complex ground water extraction and treatment system and the drainage diversion system.

EPD QAMP requirement	Title	Applicable?
Element 1	EPD Quality Assurance Program Description	Yes
Element 2	Training and Qualification	Yes
Element 3	Quality Improvement	Yes
Element 4	Document and Records	Yes
Element 5	Work Processes	Yes
Element 6	Design Control	Yes
Element 7	Procurement	Yes
Element 8	Inspection and Acceptance Testing	Yes
Element 9	Management Assessment	Yes
Element 10	Independent Assessment	Yes

Notes:

EPD = Environmental Protection Department.

QAMP = Quality Assurance Management Plan.

Appendix E

Construction Health and Safety Plan

Appendix E

Construction Health and Safety Plan

This Appendix contains the Construction Health and Safety Plan for the Pit 7 Complex Remedial Action.

E-1. Reason for Issue

Safety procedures are required to construct the ground water extraction and treatment system and drainage diversion system in the Pit 7 Complex. This Health and Safety Plan serves as an administrative tool to summarize the requirements that are pertinent to construction of the ground water extraction and treatment system and drainage diversion system in the Pit 7 Complex. Any potential health and safety hazards and the control of such hazards during construction are addressed in one or more of the following documents:

- Cerrudo Services (2007) Health and Safety Plan for the Pit 7 Complex Drainage Diversion System, Lawrence Livermore National Laboratory Site 300, Livermore, California, 94550.
- Cerrudo Services (2007) Health and Safety Plan-Respiratory Protection Supplement for the Pit 7 Complex Drainage Diversion System, Lawrence Livermore National Laboratory Site 300, Livermore, California, 94550.
- Lawrence Livermore National Laboratory (LLNL) Environment, Safety, and Health Manual (LLNL, 2006).
- LLNL Environment, Safety, and Health Manual, Document 2.5 - Procured Services Subcontractor Environment, Safety, and Health Program (LLNL, 2006).
- LLNL Environmental Restoration Division (ERD) Site Safety Plan for Lawrence Livermore National Laboratory Comprehensive, Environmental Response, Compensation and Liability Act (CERCLA) Investigations at Site 300 (LLNL, 2000).

The requirements of the LLNL Environmental Safety and Health (ES&H) Manual are based on DOE's Integrated Safety Management System Principles and Work Smart Standards.

E-2. Work to be Performed and Location of Activity

E-2.1. Location of Treatment System and Drainage Diversion System

The Pit 7 Complex is located in the East Firing Area/West Firing Area (EFA/WFA) in the northwest portion of Site 300 (Figure 2). The locations of the Pit 7 Complex ground water extraction and treatment system and drainage diversion system are shown on Figures 19 and 21, respectively.

E-2.2. Pit 7 Complex Ground Water Extraction and Treatment System

The treatment system in the Pit 7 Complex will be constructed to remove uranium, volatile organic compounds (VOCs), nitrate, and perchlorate from ground water to meet Substantive Requirements for discharge of treated water issued by the Regional Water Quality Control Board (RWQCB). Pipelines will be constructed to connect seven ground water extraction wells to the treatment facility. The treatment system will be constructed to include three aqueous-phase 200-lb granular activated carbon (GAC) canisters to remove VOCs, three canisters each filled with approximately 2.5 cubic feet (ft) of US Filter type USF A-284 ion exchange resin to remove uranium, and three canisters plumbed in-series and filled with approximately 2.5 cubic ft each of Sybron SR-7™ to remove perchlorate and nitrate. An aboveground pipeline will be constructed to convey the treated effluent to an infiltration trench where the effluent will be discharged to the subsurface. The infiltration trench will be constructed in the alluvial sediments southeast of the landfills (Figure 20). The trench will be designed for an anticipated maximum flow rate of 3.1 gallons per minute (gpm). An aboveground pipeline will connect the treatment facility to the infiltration trench. The trench will be 80 ft long, 3 ft wide, and about 10 ft deep. The base of the trench will likely be inclined to the northwest. A horizontal pipe with 0.5-in diameter holes every 2 inches that extends the entire length of the trench will convey water into the trench. The trench will be backfilled with a 7 ft thickness of drain rock. A layer of high density polyethylene (HDPE) will be placed above the drain rock. Two piezometers will be installed, one at the lowest elevation of the base of the trench and one midway along the length of and at the bottom of the trench. The upper 3 feet of the trench above the HDPE layer will be backfilled with compacted native soil to grade. The infiltration trench will require minimal maintenance. If infiltration rates are found to decrease, compacted soil, HDPE, and the filter fabric would be removed. The drain rock would be cleaned of silt and any mineralization and the trench materials would be reinstalled.

E-2.3. Pit 7 Complex Drainage Diversion System

The Pit 7 Complex drainage diversion system will be constructed to hydraulically isolate the contaminant sources in the landfills and underlying bedrock from subsurface water, thereby preventing infiltration of rainwater runoff that can result in ground water rising into Pits 3, 4, 5, and 7 and releasing contaminants. There are four components that comprise the drainage diversion system (Figure 22):

1. A subsurface drainage network on the western hillslope.
2. An upgraded rip-rapped channel at the end of the existing north-flowing concrete channel for the Pit 7 landfill cap.
3. A vegetated surface water diversion swale along the base of the eastern hillslope along the paved road (Route 4), including several culverts under Route 4 and dirt fire trails.
4. An upgraded surface water settling basin at the south end of the existing south-flowing concrete channel for the Pit 7 landfill cap and a new surface water diversion ditch.

A subsurface drainage network, consisting of several trenches, will be constructed on the western hillslope to collect and divert shallow ground water and surface water. As shown in Figure 22, this drainage diversion trench system includes an upper and lower trench network, each consisting of one long trench and one short trench that will be installed roughly parallel to

the slope contour to capture surface water and shallow subsurface water on the western hillslope. These trenches are sloped to passively drain water to three short trenches that will be installed perpendicular to the slope contour to convey the captured water to the existing concrete drainage ditch at the western perimeter of the Pit 7 Landfill cap. Water exiting the concrete channel will be diverted north of the drainage divide into a new riprapped channel.

A surface water diversion swale will be installed along the base of the eastern hillslope to collect and convey surface water runoff from the slope before it can enter valley fill alluvium and underlying weathered bedrock. Two corrugated metal pipe culverts will convey the water in the swale beneath dirt fire trails. The water is routed through a corrugated metal pipe culvert under Route 4 to a settling basin, located at the southern end of the existing south-flowing concrete-lined drainage channel. A settling basin will dissipate the energy of the water prior to it entering the existing riprap which will be rebuilt.

A more detailed description of the drainage diversion system design is presented in Section 5.5 of the Remedial Design report.

E-3. Responsibilities

Stephen Orloff, phone number (925) 423-1335, LLNL pager number 05332, is responsible for the safety of the extraction and treatment facility operation and for assuring that all work is performed in conformance with this Health and Safety Plan. In the absence of the responsible individual, Larry Griffith, phone number (925) 422-3586, LLNL pager number 67416, shall assume these responsibilities.

Judy Houdeshell, phone number (925) 422-9228, LLNL pager number 01787, is responsible for the safety of the drainage diversion system operation and for assuring that all work is performed in conformance with this Health and Safety Plan. In the absence of the responsible individual, Jim Brady, phone number (925) 423-8720 LLNL pager number 55112, shall assume these responsibilities.

The responsible individual(s) listed above, and the LLNL Environmental Safety & Health (ES&H) team leader may approve any changes in construction activities that improve or do not significantly affect safety and environmental controls. The responsible individual will ensure that this action is documented in a memorandum. Any changes in the operation that increase the hazard level, introduce additional hazards, or decrease safety shall not be made until a revision to this Health and Safety Plan has been reviewed and approved, consistent with the LLNL Environmental Restoration Division review and approval process.

Before starting construction activities, the responsible individual shall verify and document that the operating personnel have read and understand the Health and Safety Plan, relevant Integration Work Sheets (IWSs), and associated LLNL ES&H Manual sections referenced in Section E-8.2.

E-4. Hazard Analysis

E-4.1. Noise Hazard

Irreversible hearing loss can occur due to long-term exposure to noise from operating heavy equipment and other construction activities. Noise can also aggravate pre-existing hypertension. The American Conference of Industrial Hygienists has established a standard of 85 dBA over an 8-hour day. Exposure to noise louder than 85 dBA is permitted as long as the average exposure for the entire day is less than 85 dBA.

E-4.2. Electrical Hazard

A 480, 208/230, and 110 VAC electrical power supply will be used to operate the Pit 7 Complex ground water extraction and treatment system. Electrical shock and injury may occur if personnel come into contact with exposed energized parts during construction activities.

E-4.3. Chemical and Radiological Hazards

Tritium activities in ground water from the extraction wells are expected to range from 2,880 to 328,000 picocuries per liter (pCi/L). Tritium is not selectively concentrated in any organ. It is metabolized as H_20. Tritium is assumed to be readily and completely absorbed by the body and has a biological half-life of 10 days. Although tritium is present in the subsurface beneath and downgradient (east and south) of the landfills and downgradient, construction activities will not be conducted within these subsurface areas where tritium activities are in excess of health-conservative standards.

Uranium activities in ground water from the extraction wells are expected to range from 12 to 150 pCi/L. Uranium presents both chemical and radiological hazards, depending on isotopic composition and chemical form. In the case of depleted and natural uranium, which are the only types that will be encountered at Site 300, relatively soluble compounds present heavy metal toxicity similar to that of lead. The organ of concern is the kidney. Relatively insoluble compounds (e.g., high fired uranium oxides or metal) can present radiological hazards at high total activities. Although depleted uranium is present in the subsurface beneath and adjacent to the landfills and downgradient (east and south) of them, construction activities will not be conducted within these subsurface areas where depleted uranium occurs are in excess of health-conservative standards.

Nitrate (as NO_3) concentrations in extracted ground water are expected to range from 24 milligrams per liter (mg/L) to 42 mg/L. Nitrate is non-carcinogenic but significant concentrations of nitrogen in drinking water have been linked to methemoglobinemia, or blue baby syndrome, a potentially fatal disease of infants.

Perchlorate concentrations in extracted ground water are expected to range from <4 micrograms per liter (μg/L) to 16 μg/L. The concerns surrounding perchlorate contamination involves its ability to inhibit iodide anion uptake by the thyroid. This results in decreased thyroid hormone production that can affect metabolism, growth, and development. Perchlorate is currently listed as non-carcinogenic however additional studies are being conducted to provide data to evaluate the potential for cancer risk.

VOCs, consisting primarily of trichloroethene (TCE) and 1,1-dichlorothene (1,1-DCE) are expected to be in the extracted ground water treated in the Pit 7 Complex treatment system. Concentrations of total VOCs in the treatment system influent are expected to range from <0.5 μg/L to 9.2 μg/L. These VOCs are listed as potential carcinogens and kidney and liver toxins that may enter the body through inhalation, skin absorption, and/or ingestion. They are irritating to the eyes, nose, and throat and may affect the central nervous system.

Ground water diverted by the drainage diversion system should be free of contaminants, as this water is being collected from areas upgradient and/or uphill of contaminant sources in the bottom of the Pit 7 Complex valley.

E-4.4. Explosives Hazard

No explosives will be treated by the treatment system located in the Pit 7 Complex. However, high explosives are utilized at the Building 850 firing table located near the Pit 7 Complex. The major hazards from explosives are personal injury and property damage caused by heat, blast, noise, fumes, and flying debris or projectiles from unintentional or inadequately controlled ignition or explosion of such materials.

E-4.5. Confined Space Hazard

A confined space is defined as an enclosed area that is large enough for an employee to enter and perform assigned work, has limited or restricted means of entry or exit, and is not designed for continuous human occupancy. If an ignition source is present in or introduced into an enclosed space that contains flammable gases, solvents, or dust, the atmosphere may burn or explode. Serious injury or death may result when the atmosphere contains even low concentrations of toxic gases.

E-4.6. Hand and Portable Power Tool Hazard

The Laboratory provides hand and portable tools that meet accepted national safety standards. However, these tools can still cause injury and must be properly used and maintained.

E-4.7. Working Alone Hazard

Working alone means performing any activity out of sight or communication for more than a few minutes at a time. For work on exposed energized electrical equipment, an individual is considered to be working alone if not within sight of someone else. The major danger in working alone is sustaining an illness or injury that precludes self-rescue.

E-4.8. Physical and Biological Hazards

Physical hazards associated with working at Site 300 include extreme temperatures with temperatures often exceeding 100° F in the summer. High air temperatures coupled with use of semi-permeable or impermeable protective clothing and/or strenuous physical activities have a high potential for inducing heat stress in workers. In addition, hazardous conditions may exist during lightning storms at Site 300.

There may be an increased risk for Valley Fever (coccidioidomycosis) associated with work activities performed at Site 300. LLNL has recently implemented required Valley Fever awareness and controls training for workers at Site 300. Other biological hazards at Site 300 include rattlesnakes and insects (i.e., tarantulas, black widow spiders, scorpions, etc.).

E-4.9. Slip/Trip/Fall Hazards

The surfaces that operators stand or work on can be hazardous if not properly designed or maintained. Injuries can result from slips, trips, or falls on work surfaces. Work at heights or at elevated locations can also pose a fall hazard.

E-4.10. Material Handling Hazards

The hazards associated with improper material handling include being struck by a load, losing control of a load, physical overexertion, and exceeding equipment capacities. Such accidents can lead to injuries.

E-4.11. Mechanical Motion Hazards

A wide variety of mechanical motions and actions may present hazards to personnel. These can include the movement of rotating members, reciprocating arms, moving belts, meshing gears, cutting teeth, and any part that may cause impact or shear. These different types of hazardous mechanical motions and actions are basic in varying combinations to nearly all machines.

E-4.12. Hazards to Eyes

During construction activities, flying particles or objects can present a hazard to worker's eyes. The use of soldering or welding equipment also poses an eye hazard.

E-4.13. Fire Hazards

Soldering or welding of pipe connections may be necessary to connect pipeline to extraction wells or to the treatment system. These hot-work activities present a fire hazard, particularly when performed in the more remote, grassy areas of the Pit 7 Complex during the summer months when the grass is dry and highly ignitable.

In addition, vehicle travel off-road into grassy areas may be necessary during pipeline construction or hook-up and during construction of the drainage diversion system. Hot engine and vehicle exhaust components may present a fire hazard when contacting high, dry grass or vegetation.

E-5. Hazard Control

Controls for the hazards identified in Section E-4 are based on selected sections of LLNL ES&H Manual, the Site Safety Plan for LLNL CERCLA Investigations at Site 300 (2000), and Site 300 Environmental Restoration Project IWSs.

E-5.1. Noise Hazard Control

Personnel are required to wear noise protection when working within a noise hazard area. Participation in a hearing conservation program is required for all individuals exposed to noise levels that equal or exceed an 8-hour time-weighted average of 85 dBA or the peak level of 140 dBA. Noise safety precautions will be followed as outlined in the LLNL ES&H Manual, Document 18.6, "Hearing Conservation".

E-5.2. Electrical Hazard Control

E-5.2.1. Access Control

Limiting access to the breaker switches associated with the ground water treatment system prevents inadvertent contact with energized equipment. All breaker switches are contained in cabinets with keyed locks.

E-5.2.2. Electrical System Maintenance Safety Procedures

Personnel involved in installing the treatment facility electrical system shall be trained to HS5220-W, "Electrical Safety Awareness"; HS5230-W, "High Voltage Safety"; HS5245, "Lock & Tag"; HS5250, "Working on Energized R&D Equipment"; and HS5210-W, "Capacitor Safety Orientation". All electrical systems shall be checked for grounding continuity. Ground Fault Circuit Interrupters (GFCIs) shall be used on power outlets, temporary power cords (120 VAC), generators, and all power tools. Portable generators are to be used and maintained according to the assured ground program. Generators shall not be used in the rain. When practical, mechanical barriers and interlock systems shall be used. All breaker switches are contained in cabinets with keyed locks. All electrical equipment and systems will meet LLNL electrical standards and UL standards. All applicable controls stated in the LLNL ES&H Manual, Document 16.1, "Electrical Safety", 16.2, "Work and Design Controls for Electrical Equipment", and 16.3, "LLNL Authority Having Jurisdiction Requirements for Approving Electrical Equipment, Installations and Work" shall be followed. Only qualified electricians or electrical technicians may work on electrical systems.

E-5.3. Chemical and Radiological Hazard Control

Concentrations of contaminants in the ground water extraction and treatment system influent are generally several orders of magnitude lower than the recommended permissible exposure limits (PELs) or threshold limit values (TLVs) for these chemicals. Therefore, it is not anticipated that exposure levels in excess of PELs or TLVs will be encountered. However, precautions, such as use of personal protective equipment or clothing (i.e., gloves, safety glasses, wetting down soil, use of respirators) should be taken to prevent exposure when potential contact with contaminated, untreated ground water or dusts is possible per the requirements of LLNL ES&H Manual, Document 11.1, "Personal Protective Equipment." In addition, to prevent the ingestion of hazardous materials, workers should wash their hands prior to eating, drinking, smoking, or using restroom facilities. The Material Safety Data Sheets for the chemicals encountered at the Pit 7 Complex are maintained at the technician's office at Site 300 and in the Site Safety Plan for LLNL CERCLA Investigations at Site 300. Additional information on the

safe handling of chemicals can be found in the LLNL ES&H Manual, Document 14.1, "LLNL Chemical Safety Management Program."

E-5.4. Explosives Hazard Control

Explosives treatment or handling is not anticipated as part of the construction activities in the Pit 7 Complex at this time. When remote operations occur at Site 300, access to the area is restricted. Workers must complete and follow the safety procedures covered in Course HS0095W, "Site 300 Safety Orientation Training." This course contains information regarding signs, procedures, and controls used to minimize exposure to hazards related to Site 300 activities. Although no explosives are used in environmental restoration activities, it is imperative that workers follow the special safety and access requirements for the Pit 7 Complex during construction activities in this area.

E-5.5. Confined Space Hazard Control

Confined space entries are not anticipated as part of construction activities in the Pit 7 Complex at this time. However, treatment facility construction personnel and technicians should be familiar with and perform all work in confined spaces in accordance with the LLNL ES&H Manual, Document 18.7, "Working in Confined Spaces." The Hazards Control Team 1 will be contacted prior to entry of any confined spaces. A Confined Space Permit is required, and only qualified personnel with recent Confined Space Training are permitted to work in confined spaces. Personnel must follow the Two-Man Rule when working in confined spaces. Personnel shall contact the CAS Operator via trunked radio in case of emergency.

E-5.6. Hand and Portable Tool Hazard Control

Technicians and construction personnel are responsible for selecting and using the proper tools for the job assigned and for wearing the appropriate personal protective equipment (i.e., safety glasses, etc.) when working with hand and portable tools. All hand and portable tools should be inspected prior to use to make sure they are not damaged and are in good-working condition. Any tool that is damaged or unfit for use should be immediately removed from service. Personnel are responsible for following the work safety standards outlined in LLNL ES&H Manual, Document 11.2, "Hazards—General and Miscellaneous" Chapter 5.0, *Hand and Portable Power Tools* and Document 19.1, "LLNL Ergonomics Program". Personnel are responsible for wearing the appropriate PPE such as safety glasses, gloves, and steel toed boots, as appropriate.

E-5.7. Working Alone Hazard Control

When working alone on a non-hazardous activity, facility technicians and construction personnel will advise a co-worker or supervisor that they will be working alone and when they expect to return. For potentially hazardous activities, technicians will: (1) exercise prudent judgment whether or not to perform the activity alone, and (2) obtain prior authorization from work supervisor before beginning planned hazardous-work-alone operations to ensure that all hazards have been thoroughly evaluated from the perspective of working alone. Work supervisors are responsible for ensuring an IWS is prepared for activities classified as hazardous for working alone. Personnel are responsible for following the work safety standards outlined in

LLNL ES&H Manual, Document 11.2, "Hazards—General and Miscellaneous" Chapter 12.0, *Working Alone* and the Environmental Restoration Division Working Alone Guidelines (in ERD Operations and Maintenance [O&M] Manual, Appendix L) for all work-alone activities.

E-5.8. Physical and Biological Hazard Control

During late spring and summer months, technicians and construction personnel should ingest fluids and evaluate their physical conditions regularly and break when necessary to avoid overheating. Work should be conducted in accordance with the LLNL ES&H Manual, Document 11.2, "Hazards—General and Miscellaneous" Chapters 16.0, *Heat Stress* and 19.0 *Working Outdoors*. All personnel should follow procedures outlined in the Site 300 Lightning Procedures (S300 MGM-T-7) during a lightning alert at Site 300. A lightning alert means the weather conditions are potentially conducive to lightning. Lightning alerts are announced through the Site 300 communications systems. Employees and visitors must evacuate and remain outside explosives hazard zones until a lightning alert is cleared.

Employees are notified of the Valley Fever Risk through required training courses: HS0095-W and HS0096-W. The ES&H Team Site 300 Industrial Hygienist (IH) reviews tasks, procedures, and related dust minimization protocol to determine the need for respirators and/or a Hazard Assessment and Control (HAC) document for the control of exposure potential. Technicians and construction personnel should inspect work areas for snakes and other biological hazards before commencing work. The use of high top work boots is recommended. Avoid biological hazards when possible; do not harass wildlife. Anyone who is bitten should be moved to a safe area and kept calm. Notify the Emergency Dispatch by calling 911 or 925-447-6880 from a cellular phone immediately.

E-5.9. Slip/Trip/Fall Hazard Control

Work surfaces around the treatment facilities should be properly maintained at all times to prevent slips, trips, and falls. Maintenance includes assuring all spills and foreign materials (i.e., tools, excess equipment, etc.) are promptly removed, installing rubber or slip resistant mats at locations that may accumulate water, and ensuring that floor openings are equipped with adequate covers when worker exposure is possible. Any access to elevated locations or work at heights requires guardrails, an administrative control system, or fall protection devices. Personnel are responsible for following the work safety standards outlined in LLNL ES&H Manual, Document 11.1, "Personal Protective Equipment" and Document 11.2, Chapters 2.0, *Housekeeping* and 17.0, *Walking and Working Surfaces*.

E-5.10. Material Handling Hazard Control

Technicians and construction personnel should use methods that ensure personal safety and safety of the material being handled when lifting or handling materials manually. Objects that are too heavy or bulky to handle safely should be moved using more than one person or mechanical lifting device. All material lifting or handling should be performed in accordance with the safety standards and procedures for lifting contained in the LLNL ES&H Manual, Document 15.2, "Manual and Mechanical Material Handling."

E-5.11. Mechanical Motion Hazard Control

Any machine part, function, or process, which may cause injury shall either be guarded (physical barriers which prevent access to danger areas) or safeguarded (provided with devices which inhibit machine operation, to mitigate or eliminate danger areas).

Machine operators shall be trained in the proper use of equipment and associated guards/safeguards to protect themselves and others from machine-related hazards. Machine operators shall wear protective clothing or personal protective equipment as necessary whenever engineering controls are not available or are not fully capable of protecting personnel. At a minimum, all personnel operating or working within close proximity of heavy machinery or equipment shall wear safety shoes and safety glasses. When there is a potential for head injury, hard hats shall be worn. Additional details for personal protective equipment are contained in the LLNL ES&H Manual, Document 11.1.

E-5.12. Eye Hazard Control

Eye protection shall be provided and worn by technicians where flying particles or objects present a hazard. The minimum type of eye protection is a pair of safety glasses. Increased protection against flying particles is provided when safety glasses have side shields; side shields should be used in most cases. Special eye protection is required when operations such as welding or metal cutting with a torch or arc are performed.

Generally, the technician supervisor will select the eye protection that is appropriate for the type of work being conducted by the technician. Additional details for eye protection are contained in the LLNL ES&H Manual, Document 11.1.

E-5.13. Fire Hazard Control

As part of the LLNL program to control fire hazards, permits are required for welding, soldering, and other hot-work operations with a high fire potential. The permits are obtained from the LLNL Fire Department at Site 300. Construction areas shall be maintained in a fire-safe condition, including ensuring that the construction site is accessible to the Fire Department. Technicians will obtain fire permits for all soldering or welding work with a high fire potential. This work will be also be conducted in accordance with the requirements of the LLNL ES&H Manual, Document 22.5, "Fire", LLNL Fire Protection Program Manual, and National Fire Protection Association (NFPA) 51 (Standard for Fire Prevention During Welding, Cutting, or Other Hot Work).

In addition, technicians must obtain approval to access any construction work site that requires off-pavement travel as defined by the LLNL "Restricted Off-Pavement Travel at Site 300" policy manual. Technicians planning to travel off-pavement must receive prior permission from the Site 300 Manager, the Functional Area Supervisor, and the CAS Operator and carry a trunked radio for communications. In addition, appropriate training is required for all personnel engaging in off-road travel at Site 300. Personnel should not park or drive through dry, tall grass. Technicians performing off-road travel during construction activities shall be familiar with the "Restricted Off-Pavement Travel at Site 300" manual (LLNL, 2001), LLNL ES&H Manual, Document 21.3, Chapter 4.0, *Off Pavement Travel*, and IWS 11313.

In case of fire, contact the LLNL Fire Department by dialing 911 from an LLNL land line or contact the Emergency Dispatcher using a hand-held trunked radio.

E-6. Stop Work Procedures

LLNL's stop-work procedure applies to all work done at the Laboratory. Activities that are imminently dangerous to workers, the public, or the environment shall be stopped immediately by any Laboratory employee, supplemental labor employee, or contractor. Each worker is empowered to stop work if there is a perceived unsafe or unapproved condition. "Stopping work" includes stabilizing an imminent danger situation to the extent that it can be left unattended for a prolonged period of time until the issue is resolved. The person requesting the work stoppage shall notify manager responsible for the work. The manager shall notify the area ES&H Team and the Directorate ES&H Assurance Manager as soon as possible of this action. Informal stop work interventions to correct minor conditions (e.g., to remind workers to put on their hard hats, safety glasses etc.) do not require formal notification. Details of the Stop Work Process are included in the LLNL ES&H Manual, Document 2.1, "Laboratory and ES&H Policies, General Worker Responsibilities, and Integrated Safety Management."

E-7. Emergency Response Procedures

In the event of an emergency, facility operations personnel will first dial 911 from an LLNL land line or use a hand-held trunked radio to report to the Emergency Dispatcher, then administer first aid, if necessary and if trained appropriately, to injured personnel. The Emergency Dispatcher uses reserved telephone lines to promptly relay the emergency call to the following members of the LLNL Emergency Response Team:

- Fire Department.
- Security Department.
- Hazards Control Safety Teams.
- Plant Engineering.
- Health Services.

The Emergency Response Team will go to the scene of the emergency immediately. The phone numbers of individuals to be notified in the event of an emergency during off-shift hours will be posted at the Pit 7 treatment facility. The LLNL ES&H Manual describes the emergency response procedures in Document 22.1, "Emergency Preparedness and Response" and Document 22.2, "Environmental Emergency Response."

The Site 300 Environmental Restoration Division Emergency Self-Help Plan's for Buildings 843 and 835 and trailer 8726 outline the self-help procedures personnel follow in the event of a disaster.

E-8. Applicable Documents

The following documents and/or sections thereof apply to the safe construction of the Pit 7 Complex ground water extraction and treatment system and drainage diversion system and are incorporated into this Health and Safety Plan by reference.

E-8.1. Integration Work Sheet Safety Procedures

#11313 Site 300 Off Road 4 Wheel Driving Training and Restricted Travel to Perform ERD Activities

#11324 ERD Site 300 Tractor and Forklift Operation

#11340 B843 Machine Shop Operations

#11579 ERD Electronic Routine Electronic Operations

E-8.2. LLNL Environment, Safety, and Health Manual Sections

Document 2.1 Laboratory and ES&H Policies, General Worker Responsibilities, and Integrated Safety Management

Document 2.5 Procured Services Subcontractor Environment, Safety, and Health Program

Document 11.1 Personal Protective Equipment

Document 11.2 Hazards—General and Miscellaneous

- Chapter 2.0 Housekeeping
- Chapter 5.0 Hand and Portable Power Tools
- Chapter 12.0 Working Alone
- Chapter 16.0 Heat Stress
- Chapter 17.0 Walking and Working Surfaces
- Chapter 19.0 Working Outdoors

Document 12.6 LLNL Lockout/Tagout Program

Document 14.1 LLNL Chemical Safety Management Program

Document 15.2 Manual and Mechanical Material Handling

Document 16.1 Electrical Safety

Document 16.2 Work and Design Controls for Electrical Equipment

Document 16.3 LLNL Authority Having Jurisdiction Requirements for Approving Electrical Equipment, Installations and Work

Document 18.6 Hearing Conservation

Document 18.7 Working in Confined Spaces

Document 19.1 LLNL Ergonomics Program

Document 21.3 Vehicle Operations and Traffic

Chapter 4.0 Off-Pavement Travel

Document 22.1 Emergency Preparedness and Response

Document 22.2 Environmental Emergency Response

Document 22.5 Fire

E-8.3. Site Safety Plan for LLNL CERCLA Investigations at Site 300, November 2000

E-8.4. Site Safe Cerrudo Services (2007) Health and Safety Plan for the Pit 7 Complex Drainage Diversion System, Lawrence Livermore National Laboratory Site 300, Livermore, California, 94550.

E-8.5. Cerrudo Services (2007) Health and Safety Plan-Respiratory Protection Supplement for the Pit 7 Complex Drainage Diversion System, Lawrence Livermore National Laboratory Site 300, Livermore, California, 94550.

E-8.6. Site 300 Environmental Restoration Emergency Self-Help Plans

- Site 300 Trailer 8726
- Site 300 Building 835
- Site 300 Building 843

E-9. References

Cerrudo Services (2007) *Health and Safety Plan for the Pit 7 Complex Drainage Diversion System,* Lawrence Livermore National Laboratory Site 300, Livermore, California, 94550.

Cerrudo Services (2007*) Health and Safety Plan-Respiratory Protection Supplement for the Pit 7 Complex Drainage Diversion System*, Lawrence Livermore National Laboratory Site 300, Livermore, California, 94550.

LLNL (2000), *Site Safety Plan for Lawrence Livermore National Laboratory CERCLA Investigations at Site 300*, Lawrence Livermore National Laboratory, Livermore, Calif. (UCRL-21172 Rev. 3).

LLNL (2002), *Fire Protection Program Manual*, Lawrence Livermore National Laboratory, Livermore, Calif. (UCRL-MA-116646, Rev 1.).

LLNL (2004), LLNL Site 300 Environment Restoration Division Emergency Self-Help Plan, Trailer 8726.

LLNL (2004), LLNL Site 300 Environment Restoration Division Emergency Self-Help Plan, Building 835.

LLNL (2004), LLNL Site 300 Environment Restoration Division Emergency Self-Help Plan, Building 843.

LLNL (2001), *Restricted Off-Pavement Travel at Site 300*, Lawrence Livermore National Laboratory, Livermore, Calif. (UCRL-MI-144038).

LLNL (2006), LLNL Environment, Safety, and Health Manual.

LLNL (2004), Operations and Maintenance Manual Volume 1: Treatment Facility Quality Assurance and Documentation, Appendix L.

Appendix F

Operations and Maintenance Quality Assurance/Quality Control Plan

Appendix F

Operations and Maintenance Quality Assurance/Quality Control Plan

F-1. Introduction

This Quality Assurance/Quality Control (QA/QC) Plan has been developed in support of the Operations and Maintenance (O&M) for the Pit 7 Complex ground water extraction and treatment system and drainage diversion system. The purpose of the plan is to define the quality objectives and areas of responsibility to operate and maintain these facilities. This plan meets the QA requirements of the U.S. Department of Energy (DOE) Order 414.1C (DOE, 2005), the Environmental Protection Department (EPD) Quality Assurance Management Plan (QAMP), (LLNL, 2006), and the Quality Assurance Project Plan (QAPP) for the Livermore Site and Site 300 Environmental Restoration Projects (Dibley, 1999). A matrix comparing the elements of this plan to the U.S. Environmental Protection Agency (EPA) requirements for Quality Assurance Project Plans (QA/G-5)(U.S. EPA, 2002) is provided in Table F-1.

The objectives of the project supported by this QA/QC plan are to:

- Assure excellence in maintenance services and operations to achieve quality.
- Provide the QA/QC requirements to meet all programmatic and institutional needs.

This QA/QC plan defines the process for providing confidence that these QA/QC objectives will be achieved and that achievement will include due consideration for health, safety, property, and the environment.

F-2. Quality Assurance Program

The LLNL Site 300 Environmental Restoration Project's QA Program is based on the following QA documents:

- U.S. DOE Order 414.1C, Quality Assurance Program (DOE, 2005).
- Lawrence Livermore National Laboratory (LLNL) Environmental Protection Department (EPD) Quality Assurance Management Plan (QAMP) (LLNL, 2006).
- LLNL Environmental Restoration Project Quality Assurance Project Plan (QAPP) (Dibley, 1999).
- LLNL Livermore Site and Site 300 Environmental Restoration Project Standard Operating Procedures (SOPs) (Goodrich and Wimborough, 2006).

Table F-1 shows the 10 elements of the EPD QAMP, which implements DOE Order 414.1C, and their applicability to the operation and maintenance for the Pit 7 Complex ground water

extraction and treatment system and drainage diversion system. The O&M QA/QC Plan follows the Environmental Restoration Project QAPP approved by the U.S. EPA.

F-2.1. Organization

This section documents the organizational structure, functional responsibilities, levels of authority, and lines of communications for those aspects of the O&M of the Pit 7 Complex ground water extraction and treatment system and drainage diversion system that affect quality.

Figure F-1 shows the organizational structure for QA/QC activities. The descriptions below generally describe the QA/QC responsibilities of those mainly involved in carrying out the QA/QC program for the O&M of the Pit 7 Complex ground water extraction and treatment system and drainage diversion system. The LLNL Environmental Restoration Division (ERD) Site 300 Project Leader, the Quality Assurance Engineer, and other individuals shown in Figure F-1 have the following responsibilities:

- The Site 300 Project Leader issues this QA/QC plan and periodically reviews its implementation. The Site 300 Project Leader may request an independent review or formal audit of the QA/QC program.
- The Quality Assurance Implementation Coordinator is responsible for the development and implementation of the QA/QC plan, establishment and control of the QA document files, coordination with appropriate project personnel to assure compliance within groups over which the quality organization has no administrative control, and development of tracking and reporting systems to provide management visibility of implementation activities and results.
- The Quality Assurance Engineer is responsible for providing direction in the O&M of remediation systems to meet QA/QC objectives.
- The Treatment Facility Compliance Manager is responsible for overseeing facility startup and monitoring its performance and operations.
- The Remediation Engineer is responsible for providing technical direction in the O&M of treatment system and drainage diversion system, reviewing and tracking failure of equipment and systems and determining the root cause of failures. The Remediation Engineer is also responsible for implementing the changes to the preventative maintenance schedule to reduce maintenance cost and facility downtime.
- The Technician Supervisor is responsible for the day-to-day supervision of the Technicians who operate and maintain the Pit 7 Complex ground water extraction and treatment system and drainage diversion system and perform maintenance activities. This includes scheduling required maintenance and ensuring completion in a timely fashion.
- The Treatment Facility Operator/Technician is responsible for the day-to-day operation and maintenance of the Pit 7 Complex ground water extraction and treatment system and drainage diversion system. This includes operating equipment, sampling, and performing maintenance to approved procedures, ensuring the measuring and testing equipment is properly calibrated and is of the proper type, range, and accuracy, reporting non-conformances or improvements, and reviewing facility data.

- The LLNL Plant Engineering Maintenance Manager (PEMM) is responsible for overall management of the inspection, maintenance, and repair of the drainage diversion system. The PEPM reports inspection, maintenance, and repair activities to the ERD Site 300 Project Leader. The PEPM is Plant Engineering's primary contact with ERD for the assigned project. He/she is responsible for the overall coordination and execution of the drainage diversion system construction project.
- State Certified Analytical Laboratories using EPA methods are responsible for providing independent chemical analytical results on water samples. For the Pit 7 Complex ground water extraction and treatment system, these samples are submitted as part of the monitoring program required by the Regional Water Quality Control Board's Substantive Requirements and the Sampling and Analysis Plans contained in Appendix B. Monitoring requirements will be incorporated into the revised Compliance Monitoring Plan in 2009. In addition, operational testing samples collected prior to the official operation of a facility and routine samples taken to evaluate facility performance will be submitted for chemical analyses.

F-3. Training and Qualifications

Personnel supporting Environmental Restoration Projects are trained to ensure that they have the skills and knowledge necessary to perform their work assignments in a safe, competent, uniform, and environmentally sound manner. Technicians performing O&M activities comply with the EPD's Training Management Plan, the Safety and Environmental Protection (SEP) Directorate Training Implementation Plan, and the LLNL Training Program Manual. In addition to the regulatory driven training such as hazardous waste operations and emergency response certification, Superfund Amendments and Reauthorization Act/Occupational Safety and Health Administration (SARA/OSHA), and the Environment, Safety, and Health courses provided by LLNL, technicians also receive on-the-job training for their specific work tasks. All training is tracked and recorded by the EPD Training Section in the Livermore Training Records and Information Network (LTRAIN) database.

F-4. Quality Improvement

ERD technicians integrate quality improvement into all O&M activities by communicating to management per the requirements of SOP 4.12, "Quality Improvement Forms," any unsafe practice or nonconforming item or process (e.g., faulty material, malfunctioning equipment, process defects, data irregularities, and deviations from standard operating procedures) that could potentially compromise worker safety, the activity's deliverable, or the compliance status of the facility. The technicians also identify and communicate methods to improve quality or achieve greater efficiency of the treatment systems. These personnel also participate in treatment system assessments and operations meetings to address quality improvement issues.

F-5. Documents and Records

Documents and records have been developed and controlled in a manner that ensures availability to EPD managers and workers so that they can perform their assigned responsibilities

safely and properly per the requirements of SOP 4.18, "ERD Document Control". Records are retained so that the basis of technical and regulatory decisions can be adequately defended.

F-5.1. Record Keeping

An operational logbook is kept at each treatment system. The logbook entries include the operating parameters of each system (i.e., temperature, pressure, etc.), the number and type of samples taken, maintenance performed on the system, and all adjustments made by the operators to the system.

In addition, the following QA records are generated by treatment system activities and will be kept on file at the treatment system:

- Chain-of-Custody forms.
- Analytical data.
- Instrument calibration and maintenance logbooks.
- Assessment reports and checklists.
- Course and On-the-Job Training completion records.
- Completed Quality Improvement Forms.
- Standard traceability certificates.

All inspection, maintenance, and repair logs and check lists for the drainage diversion system will be kept on file by the LLNL Plant Engineering Department at Site 300.

F-6. Work Processes

All work must be authorized before commencing and work activities shall be conducted under conditions and controls that ensure worker safety and provide assurance that quality is achieved. Work processes will be performed per approved procedures.

F-6.1. Identification and Control of Items

Samples, generated as part of the O&M activities will be assigned unique identifiers. Documented traceability of sample identifiers is maintained throughout the handling of samples. Such documented traceability is referred to as the chain-of-custody process for samples and is described in SOP 4.2, "Sample Control and Documentation".

F-6.2. Identification and Control of Waste Products

Waste products generated by treatment facility O&M activities will be received and managed per the LLNL Radioactive and Hazardous Waste Management Division SOPs. Waste will be assigned unique identifiers. Documented traceability of identifiers is maintained throughout the handling of a product and for the data generated from the characterization of a product.

As the drainage diversion system captures and diverts clean storm water, no waste products will be generated during the maintenance of this system.

F-6.3. Handling, Storing, and Shipping of Items

Procedures have been developed to ensure that items associated with O&M activities are handled, stored, and shipped to prevent damage, loss, or deterioration.

Environmental samples will be handled, stored, and shipped per the requirements of SOP 4.3, "Sample Containers and Preservation" and SOP 4.4, "Guide to the Handling, Packaging and Shipping of Samples".

F-6.4. Equipment Calibration and Verification

All measuring and test equipment used at the treatment facilities should be calibrated, maintained, and controlled per ERD Standard Operating Procedure 4.8 "Calibration/Verification and Maintenance of Measuring and Test Equipment" and the EPD QAMP, Section 5.5.5, to assure conformance with standards of known accuracy and traceability. Technicians are responsible for ensuring the calibration status of all data collection and monitoring equipment is current prior to use. The calibration status of this equipment will be identified and tracked in a Calibration/Maintenance Log.

F-6.5. Operations and Maintenance

The Pit 7 Complex ground water extraction and treatment system will be operated to treat ground water containing uranium, volatile organic compounds (VOCs), nitrate, and perchlorate. The water will be treated to meet the requirements specified by the Regional Water Quality Control Board (RWQCB). The Pit 7 Complex drainage diversion system will be maintained to hydraulically isolate the contaminant sources in the landfills and underlying bedrock from subsurface water, thereby preventing infiltration of rainwater runoff that can result in ground water rising into Pits 3, 4, 5, and 7 and releasing contaminants.

F-6.5.1. Operations

The Pit 7 Complex ground water extraction and treatment system operating procedures including startup, shutdown, normal operation, safety considerations, and maintenance procedures will be developed and included in an O&M manual.

A summary of the operations and maintenance procedures and schedule from the Operations and Maintenance Plan for the Pit 7 Complex drainage diversion system (Winzler and Kelly, 2007) is presented in Table F-3.

F-6.5.2. Maintenance

Two types of maintenance are performed at the Pit 7 Complex ground water extraction and treatment system and drainage diversion system:

- Preventive
- Corrective

F-6.5.2.1. Preventive Maintenance

Preventive maintenance is performed on those treatment system components that need routine servicing and are part of systems related to quality. The preventive maintenance

schedule is kept at the treatment system with the operations procedures. Maintenance will be performed by LLNL Plant Engineering and/or ERD personnel, and will follow the requirements set in the O&M manual to ensure the maintenance functions are performed as planned.

Table F-2 is a tentative schedule of the preventive maintenance for the Pit 7 Complex ground water extraction and treatment system.

Table F-3 is a tentative schedule of the inspection and preventive maintenance for the Pit 7 Complex drainage diversion system. This schedule was developed from the design engineers' Operations and Maintenance Plan (Winzler and Kelly Consulting Engineers, 2007).

F-6.5.2.2. Corrective Maintenance

Corrective maintenance is performed when a system component fails or is beginning to fail and the quality of facility operations could be compromised if operation continues. Using the graded approach, root cause analysis is performed when a component fails before the corrective maintenance action commences. This is to ensure that the nature of the problem is understood and can be prevented. This root cause analysis is also used to modify the preventive maintenance plan where appropriate. The results of the root cause analyses are documented in the daily facility operations logbook. Quality Improvement Forms are used to document component failures, root cause analysis, and preventive maintenance per SOP 4.12. As with preventive maintenance, corrective maintenance is performed by Plant Engineering personnel or ERD personnel in accordance with this QA/QC plan.

All corrective maintenance actions and their times of completion for the ground water extraction and treatment system are recorded in the treatment system daily operations logs. Once complete, the specific component or system is started up and operated. This ensures that the maintenance was correctly performed and that system quality is maintained. An entry in the treatment system log is made, indicating that an operational check was made following preventive or corrective maintenance and the performance of the new component is noted. If successful, the system is allowed to resume normal operations. Startup sampling will be performed upon system restart, if necessary, in accordance with the requirements of the Substantive Requirements.

When the O&M manual for the Pit 7 Complex ground water extraction and treatment systems is developed, it will indicate the required spare parts for system components that have relatively high risk of failure or a long lead time for procurement. These components are to be maintained onsite to prevent extended shutdown of the treatment system.

All corrective maintenance actions and their times of completion for the drainage diversion system will be recorded and kept on file by the LLNL Plant Engineering Department at Site 300. If major repairs are necessary, the need for these will be noted during preventive maintenance inspections.

F-7. Inspection and Acceptance Testing

The Technician Supervisor and Remediation Engineer shall maintain cognizance of incoming and stored materials and items and inspect or test them for conformance to requirements, as necessary. They shall tag rejected items to ensure that they are not inadvertently used.

Lockout tags shall be tied on electrical equipment, lifts and hoists, valves, etc. where such items (1) are unsafe to use, (2) are uncertified, or (3) may pose a risk to personnel working on the system per the requirements of SOP 4.16, "ERD Lockout/Tag Program".

F-8. Assessment/Verification

ERD performs QA/Management self-assessments of the treatment systems triennially. These assessments review treatment system activities against QA and Environmental Safety and Health (ES&H) requirements and procedures. A member of the ERD management team participates on the assessment team to identify, correct, and prevent management problems that hinder the achievement of ERD's objectives. ERD uses the results of the assessments performed by internal and external organizations to assess the performance of treatment system activities. Additional information on assessment tools can be found in the ERD Quality Assurance Project Plan and the EPD QAMP.

F-9. References

Dibley, V. (1999), *Environmental Restoration Division, Quality Assurance Project Plan, Livermore Site and Site 300 Environmental Restoration Projects,* Lawrence Livermore National Laboratory, Livermore, Calif. (UCRL-AR-103160 Rev. 2).

Goodrich, R., and J. Wimborough (Eds.) (2006), *LLNL Livermore Site and Site 300 Environmental Restoration Project Standard Operating Procedures (SOPs),* Lawrence Livermore National Laboratory Livermore, Calif. (UCRL-MA-109115 Rev. 12).

LLNL (2006), *Environmental Protection Department Quality Assurance Management Plan, Rev. 6,* Lawrence Livermore National Laboratory, Livermore Calif.

LLNL (2004), *Environmental Restoration Division, Operations and Maintenance Manual, Volume 1: Treatment Facility Quality Assurance and Documentation*, Lawrence Livermore National Laboratory, Livermore, Calif.

U.S. DOE (2005), DOE Order 414.1C, Quality Assurance Program, Office of Nuclear Safety Policy and Standards.

U.S. Environmental Protection Agency (2002), Guidance for Quality Assurance Project Plans (QA/G-5), EPA/240/R-02/009, Office of Research and Development.

Winzler and Kelly Consulting Engineers (2007), Operations and Maintenance Plan for the Pit 7 Complex Drainage Diversion System, August 14, 2007.

Table F-1. Applicability of the EPD QAMP elements to the operation and maintenance of the Pit 7 Complex ground water extraction and treatment system and drainage diversion system.

EPD QAMP requirement	Title	Applicable ?
Element 1	EPD Quality Assurance Program Description	Yes
Element 2	Training and Qualification	Yes
Element 3	Quality Improvement	Yes
Element 4	Document and Records	Yes
Element 5	Work Processes	Yes
Element 6	Design Control	Yes
Element 7	Procurement	Yes
Element 8	Inspection and Acceptance Testing	Yes
Element 9	Management Assessment	Yes
Element 10	Independent Assessment	Yes

Notes:

EPD = Environmental Protection Department.

QAMP = Quality Assurance Management Plan.

Table F-2. Preventive maintenance for the Pit 7 Complex ground water extraction and treatment system.

Action	Frequency/comments
Inspect submersible pump	Annually
Check aqueous-phase granular activated carbon (GAC) units and associated piping	Weekly
Check ion exchange units and associated piping	Weekly
Check discharge lines	Weekly
Monitor pump controller	Weekly
Monitor level sensors	Weekly
Monitor pressure indicators	Weekly
Monitor pH meter	Weekly
Monitor flow indicator	Weekly
Inspect miscellaneous hoses, seals, fittings, etc.	Weekly
Perform preventive maintenance for temperature sensors	Annually
Perform preventive maintenance for temperature indicators	Annually
Inspect/replace peristaltic hose	Weekly
Interlock check	Annually
Check electrical breakers and disconnects[a]	Annually
Inspect sampling ports	Before use
Clean organic debris from area surrounding the building	As needed

Notes:

[a] All electrical system maintenance to be performed by a qualified electrician or electrical technician.

Table F-3. Inspection and maintenance schedule for the Pit 7 Complex drainage diversion system.

Action	Frequency/comments
Inspect settling basin. Examine settling basin banks for seepage and structural soundness. Inspect the settling basin for cracks on concrete walls and joints. Check inlet channels and overflow spillways for any damage or obstructions. Repair damage and remove obstructions as needed. Check the outlet standpipe for clogging. Clean the filter fabric, the outlet orifice, and the sump area in between the 10″ and 24″ standpipes as needed. Check inlet and outlet areas for erosion and stabilize if required.	At the beginning and end of the rainy season and monthly during the rainy season. Additional inspections may be conducted following heavy storm events.
Remove sediment that accumulates in the settling basin.	Sediment should be removed when sediment accumulation reaches one half of the designated sediment storage volume (6-in. deep in the basins).
Inspect vegetated swales for erosion, damage to vegetation, and sediment and debris accumulation. The swales should be checked for debris and litter, and areas of sediment accumulation.	At the beginning and end of the rainy season. Additional inspections may be conducted following heavy storm events.
Sediment accumulating near culverts and in channels within the vegetated swales should be removed.	During vegetated swale inspections when sediment reaches a 3-in height at any spot or covers vegetation.
Flush the perforated pipe in the vegetated swale with water.	Annually, at the end of the wet season.
Inspect all concrete channels for erosion, damage to channel and banks, and sediment and debris accumulation. The channel should be checked for debris and litter, and areas of sediment accumulation.	At the beginning and end of the rainy season. Additional inspections may be conducted following heavy storm events.
Remove sediment accumulated in concrete channels Repair the gravel bed and the permeable fabric as needed.	Sediment should be removed when it builds up to a 3-in. height at any spot.
Flush the perforated pipes in the west slope trenches.	Annually, at the end of the wet season.
Inspect northern riprap lined channel for erosion, damage to channel and banks, and sediment and debris accumulation.	At the beginning and end of the rainy season. Additional inspections may be conducted following heavy storm events.

Table F-3. Inspection and maintenance schedule for the Pit 7 Complex drainage diversion system. (continued)

Action	Frequency/comments
Inspect sediment accumulation in channels. Repair riprap as needed.	After the rainy season, flush the sediment in the flat portion of the channel when it builds up to a 6-in. height to the steep portion of the channel.
Inspect the southern vegetated swale channel located at the downstream end of the settling basin for erosion, damage to channel and banks, and sediment and debris accumulation. The channel should be checked for debris and litter, and areas of sediment accumulation.	At the beginning and end of the rainy season. Additional inspections may be conducted following heavy storm events.
Repair riprap.	As needed.

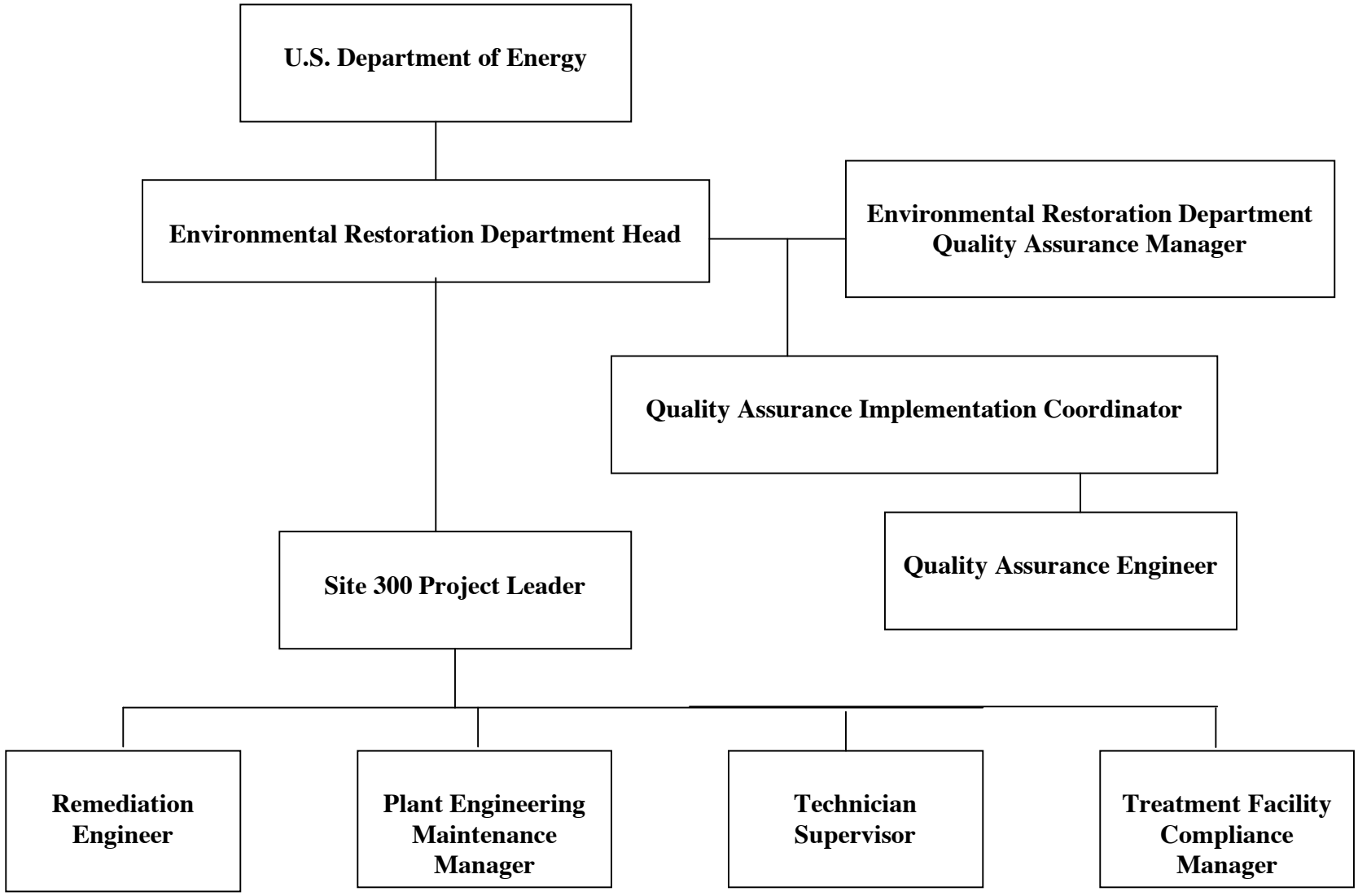

Figure F-1. Organizational structure for operations and maintenance quality assurance/quality control activities.

Appendix G

Operations and Maintenance Health and Safety Plan

Appendix G

Operations and Maintenance Health and Safety Plan

This Appendix contains the Operations and Maintenance (O&M) Health and Safety Plan for the Pit 7 Complex ground water extraction and treatment system and drainage diversion system.

G-1. Reason for Issue

Safety procedures are required to operate and maintain the ground water extraction and treatment system and drainage diversion system in the Pit 7 Complex. This Health and Safety Plan serves as an administrative tool to summarize the requirements of the Lawrence Livermore National Laboratory (LLNL) Environment, Safety, and Health (ES&H) Manual (LLNL, 2006) and Site Safety Plan for LLNL Site 300 (LLNL, 2005), that are pertinent to the Pit 7 Complex treatment system and drainage diversion system O&M. The requirements of the LLNL ES&H Manual are based on Department of Energy's (DOE's) Integrated Safety Management System Principles and Work Smart Standards.

G-2. Work to be Performed and Location of Activity

G-2.1. Location of Treatment System and Drainage Diversion

The Pit 7 Complex is located in the northwest portion of Site 300 (Figure 2). The locations of the Pit 7 Complex ground water extraction and treatment system and drainage diversion system are shown on Figures 19 and 21, respectively.

G-2.2. Remedial System Objectives and Methods

The treatment system in the Pit 7 Complex will be used to remove uranium, nitrate, perchlorate, and volatile organic compounds (VOCs) from ground water to meet Substantive Requirements for discharge of treated water issued by the Regional Water Quality Control Board (RWQCB). Contaminated ground water will be pumped from extraction wells utilizing submersible pumps. Maximum flow rate to the treatment facility is not expected to exceed 2 to 3 gallons per minute. Aqueous-phase granular activated carbon (GAC) will be used to remove VOCs from the extracted ground water. Ion-exchange units will then treat uranium, nitrate, and perchlorate in the treatment facility influent. Treated effluent will be discharged to an infiltration trench that can sustain an infiltration rate of 3.1 gallons per minute (gpm). Treated effluent will be sampled and analyzed for tritium, uranium, perchlorate, nitrate, and VOCs prior to re-injection to an infiltration trench to assure that the effluent meets all discharge limits.

The Pit 7 Complex drainage diversion system will hydraulically isolate the contaminant sources in the landfills and underlying bedrock from subsurface water, thereby reducing the

volume of infiltrating rainwater that could otherwise result in ground water rising into Pits 3, 4, 5, and 7 and releasing contaminants. Subsurface diversion trenches on the western slope will capture surface runoff and shallow subsurface water and convey it to north of the Pit 7 Complex valley. A surface water swale at the base of the eastern hillslope will divert surface flow coming off the hillslope to the south where it will infiltrate the streambed.

G-2.3. Ground Water Treatment System Processes

Extracted ground water is filtered to remove fine particles and then passes through a number or canisters filled with treatment media before being discharged to a subsurface infiltration trench. Water samples are collected periodically and are analyzed to monitor treatment effectiveness and to be certain that effluent water meets discharge requirements.

G-2.3.1. Particulate Filtration

Extracted ground water passes through a five-micron filtration system to remove suspended particles from the ground water. This filtration process is designed to remove particulates from ground water that could reduce treatment system efficiency.

G-2.3.2. Ground Water Treatment Process

The treatment system in the Pit 7 Complex will be constructed to remove uranium, VOCs, nitrate, and perchlorate from ground water to meet Substantive Requirements for discharge of treated water issued by the RWQCB. Pipelines will be constructed to connect seven ground water extraction wells to the treatment facility. The treatment system will constructed to include three aqueous-phase 200-pound GAC canisters to remove VOCs, three canisters each filled with approximately 2.5 cubic feet (ft) of US Filter type USF A-284 ion exchange resin to remove uranium, and three canisters plumbed in-series and filled with approximately 2.5 cubic ft each of Sybron SR-7™ to remove perchlorate and nitrate.

G-2.3.3. Discharge of Treated Ground Water

An aboveground pipeline will be constructed to convey the treated effluent to an infiltration trench where the effluent will be discharged to the subsurface. The infiltration trench will be constructed in the alluvial sediments southeast of the landfills (Figure 20). The trench will be designed for an anticipated maximum flow rate of 3.1 gpm. The trench will be 80 ft long, 3 ft wide, and about 10 ft deep. The base of the trench will likely be inclined to the northwest. A horizontal pipe with 0.5-in diameter holes every 2 inches that extends the entire length of the trench will convey water into the trench. The trench will be backfilled with a 7 ft thickness of drain rock. A layer of high-density polyethylene (HDPE) will be placed above the drain rock. Two piezometers will be installed, one at the lowest elevation of the base of the trench and one midway along the length of and at the bottom of the trench. The upper 3 feet of the trench above the HDPE layer will be backfilled with compacted native soil to grade. The infiltration trench will require minimal maintenance. If infiltration rates are found to decrease, compacted soil, HDPE, and the filter fabric would be removed. The drain rock would be cleaned of silt and any mineralization and the trench materials would be reinstalled.

G-2.4. Drainage Diversion System Processes

The Pit 7 Complex drainage diversion system will hydraulically isolate the contaminant sources in the landfills and underlying bedrock from subsurface water, thereby preventing infiltration of rainwater runoff that can result in ground water rising into Pits 3, 4, 5, and 7 and releasing contaminants. There are four components that comprise the drainage diversion system (Figure 21):

1. A subsurface drainage network on the western hillslope.
2. An upgraded rip-rapped channel at the end of the existing north-flowing concrete channel for the Pit 7 landfill cap.
3. A vegetated surface water diversion swale along the base of the eastern hillslope along the paved road (Route 4), including several culverts under Route 4 and dirt fire trails.
4. An upgraded surface water settling basin at the south end of the existing south-flowing concrete channel for the Pit 7 landfill cap and a new surface water diversion ditch.

A subsurface drainage network, consisting of several trenches, will be constructed on the western hillslope to collect and divert shallow ground water and surface water. As shown in Figure 22, this drainage diversion trench system includes an upper and lower trench network, each consisting of one long trench and one short trench that will be installed roughly parallel to the slope contour to capture surface water and shallow subsurface water on the western hillslope. These trenches are sloped to passively drain water to three short trenches that will be installed perpendicular to the slope contour to convey the captured water to the existing concrete drainage ditch at the western perimeter of the Pit 7 Landfill cap. Water exiting the concrete channel will be diverted north of the drainage divide into a new riprapped channel.

A surface water diversion swale will be installed along the base of the eastern hillslope to collect and convey surface water runoff from the slope before it can enter valley fill alluvium and underlying weathered bedrock. Two corrugated metal pipe culverts will convey the water in the swale beneath dirt fire trails. The water is routed through a corrugated metal pipe culvert under Route 4 to a settling basin, located at the southern end of the existing south-flowing concrete-lined drainage channel. A settling basin will dissipate the energy of the water prior to it entering the existing riprap which will be rebuilt.

A more detailed description of the drainage diversion system design is presented in Section 5.5 of the Remedial Design report.

G-3. Responsibilities

Stephen Orloff, phone number (925) 423-1335, LLNL pager number 05332, is responsible for the safety of the extraction and treatment facility operation and for assuring that all work is performed in conformance with this Health and Safety Plan. In the absence of the responsible individual, Larry Griffith, phone number (925) 422-3586, LLNL pager number 67416, shall assume these responsibilities.

Stan Pereira, phone number (925) 423-5210, LLNL pager number 50288, is responsible for the safety of the drainage diversion system operation and for assuring that all inspections, maintenance, and repair work is performed in conformance with this Health and Safety Plan. In

the absence of the responsible individual, Marty Svendsen, phone number (925) 423-5385, LLNL pager number 50272, shall assume these responsibilities.

Any changes in operations that improve or do not significantly affect safety and environmental controls may be approved by the responsible individual(s) listed above, and the LLNL ES&H team leader. The responsible individual will ensure that this action is documented in a memorandum. Any changes in the operation that increase the hazard level, introduce additional hazards, or decrease safety shall not be made until a revision to this Health and Safety Plan has been reviewed and approved, consistent with the LLNL Environmental Restoration Division (ERD) review and approval process.

Before starting operation, the responsible individual shall verify and document that the operating personnel have read and understand the Health and Safety Plan, relevant Integration Work Sheets (IWSs), and associated LLNL ES&H Manual sections referenced in Section G-5 below.

G-4. Hazard Analysis for Treatment Facility and Drainage Diversion System

Hazard analyses for Site 300 treatment facilities and for the drainage diversion system are conducted using a graded approach, which is directly related to the level of hazardous inventories and operations present (i.e., biological, chemical, radiological, explosive, and industrial hazards). As the hazards and risks associated with a facility increase, the formalization, documentation, and general levels of effort increase. The facility classifications are: Office, Light Science & industry (LSI), Low-Hazard, Moderate Hazard, and High Hazard. Screening evaluations are required for all facilities that do not meet the Office criteria. The process is documented using the Screening Report, also known as a Tier 1 document. As a result of this process, treatment facilities and the drainage diversion system are classified as LSI facilities, which require no further documentation beyond the Screening Report. However, a number of hazards are associated with work at the Pit 7 Complex as described below.

G-4.1. Noise Hazard

Irreversible hearing loss can occur due to long-term exposure to noise from operating heavy equipment and other construction activities. Noise can also aggravate pre-existing hypertension. The American Conference of Industrial Hygienists has established a standard of 85 dBA over an 8-hour day. Exposure to noise louder than 85 dBA is permitted as long as the average exposure for the entire day is less than 85 dBA.

G-4.2. Electrical Hazard

A 480, 208/230, and 110 VAC electrical power supply is used to operate the Pit 7 Complex ground water extraction and treatment system. Electrical shock and injury may occur if personnel come into contact with exposed energized parts during servicing and maintenance activities.

G-4.3. Seismic Hazard

Personnel may be injured during an earthquake due to falling equipment or missile hazards (equipment or materials moving energetically due to seismic forces).

G-4.4. Chemical and Radiological Hazard

Tritium activities in ground water from the extraction wells are expected to range from 2,880 to 328,000 picocuries per liter (pCi/L). Tritium is not selectively concentrated in any organ. It is metabolized as H_20. Tritium is assumed to be readily and completely absorbed by the body and has a biological half-life of 10 days.

Uranium activities in ground water from the extraction wells are expected to range from 12 to 150 pCi/L. Uranium presents both chemical and radiological hazards, depending on isotopic composition and chemical form. In the case of depleted and natural uranium, which are the only types that will be encountered at Site 300, relatively soluble compounds present heavy metal toxicity similar to that of lead. The organ of concern is the kidney. Relatively insoluble compounds (e.g., high fired uranium oxides or metal) can present radiological hazards at high total activities.

Nitrate (as NO_3) concentrations in extracted ground water are expected to range from 24 milligrams per liter (mg/L) to 42 mg/L. Nitrate is non-carcinogenic but significant concentrations of nitrogen in drinking water have been linked to methemoglobinemia, or blue baby syndrome, a potentially fatal disease of infants.

Perchlorate concentrations in extracted ground water are expected to range from <4 micrograms per liter (μg/L) to 16 μg/L. The concerns surrounding perchlorate contamination involves its ability to inhibit iodide anion uptake by the thyroid. This results in decreased thyroid hormone production that can affect metabolism, growth, and development. Perchlorate is currently listed as non-carcinogenic however additional studies are being conducted to provide data to evaluate the potential for cancer risk.

VOCs, consisting primarily of trichloroethene (TCE) and 1,1-dichlorothene (1,1-DCE) are expected to be in the extracted ground water treated in the Pit 7 Complex treatment system. Concentrations of total VOCs in the treatment system influent are expected to range from <0.5 μg/L to 9.2 μg/L. These VOCs are listed as potential carcinogens and kidney and liver toxins that may enter the body through inhalation, skin absorption, and/or ingestion. They are irritating to the eyes, nose, and throat and may affect the central nervous system.

Ground water diverted by the drainage diversion system should be free of contaminants, as this water is being collected from areas upgradient and/or uphill of contaminant sources in the bottom of the Pit 7 Complex valley.

G-4.5. Explosives Hazard

No explosives are treated by the treatment system located in the Pit 7 Complex. However, high explosives are utilized at the Building 850 firing table located near the Pit 7 Complex. The major hazards from explosives are personal injury and property damage caused by heat, blast, noise, fumes, and flying debris or projectiles from unintentional or inadequately controlled ignition or explosion of such materials.

G-4.6. Confined Space Hazard

A confined space is defined as an enclosed area that is large enough for an employee to enter and perform assigned work, has limited or restricted means of entry or exit, and is not designed for continuous human occupancy. If an ignition source is present in or introduced into an enclosed space that contains flammable gases, solvents, or dust, the atmosphere may burn or explode. Serious injury or death may result when the atmosphere contains even low concentrations of toxic gases.

G-4.7. Hand and Portable Power Tool Hazard

The Laboratory provides hand and portable tools that meet accepted national safety standards. However, these tools can still cause injury and must be properly used and maintained.

G-4.8. Working Alone Hazard

Working alone means performing any activity out of sight or communication for more than a few minutes at a time. The major danger in working alone is sustaining an illness or injury that precludes self-rescue.

G-4.9. Physical and Biological Hazards

Physical hazards associated with working at Site 300 include extreme temperatures with temperatures often exceeding 100º F in the summer. High air temperatures coupled with use of semi-permeable or impermeable protective clothing and/or strenuous physical activities have a high potential for inducing heat stress in workers. In addition, hazardous conditions may exist during lightning storms at Site 300.

There may be an increased risk for Valley Fever (coccidioidomycosis) associated with work activities performed at Site 300. LLNL has recently implemented required Valley Fever awareness and controls training for workers at Site 300. Other biological hazards at Site 300 include rattlesnakes and insects (i.e., tarantulas, black widow spiders, scorpions, etc.).

G-4.10. Slip/Trip/Fall Hazards

The surfaces that operators stand or work on can be hazardous if not properly designed or maintained. Injuries can result from slips, trips, or falls on work surfaces. Work at heights or at elevated locations can also pose a fall hazard.

G-4.11. Material Handling Hazards

The hazards associated with improper material handling include being struck by a load, losing control of a load, physical overexertion, and exceeding equipment capacities. Such accidents can lead to injuries.

G-4.12. Mechanical Motion Hazards

A wide variety of mechanical motions and actions may present hazards to personnel. These can include the movement of rotating members, reciprocating arms, moving belts, meshing gears, cutting teeth, and any part that may cause impact or shear. These different types of

hazardous mechanical motions and actions are basic in varying combinations to nearly all machines.

G-4.13. Fire Hazards

Vehicle travel off-road into grassy areas may be necessary during pipeline and/or well maintenance. Hot engine and vehicle exhaust components may present a fire hazard when contacting high, dry grass or vegetation.

G-5. Hazard Control

Controls for the hazards identified in Section G-4 are based on selected sections of LLNL ES&H Manual, the Site Safety Plan for LLNL CERCLA Investigations at Site 300, and Site 300 Environmental Restoration Project IWSs.

G-5.1. Noise Hazard Control

Personnel are required to wear noise protection when working within a noise hazard area. The ES&H Team shall be notified each time new drilling or generator equipment is brought on site, so that an evaluation of noise exposures can be conducted. Participation in a hearing conservation program is required for all individuals exposed to noise levels that equal or exceed an 8-hour time-weighted average of 85 dBA or the peak level of 140 dBA. Noise safety precautions will be followed as outlined in the LLNL ES&H Manual, Document 18.6, "Hearing Conservation".

G-5.2. Electrical Hazard Control

G-5.2.1. Access Control

Inadvertent contact with energized equipment associated with the ground water extraction and treatment system is prevented by limiting access to the breaker switches. All breaker switches are contained in cabinets with keyed locks. Energized circuits are insulated from personnel contact.

G-5.2.2. Electrical System Maintenance Safety Procedures

Personnel performing maintenance on the treatment facility electrical system shall be trained to HS5220-W, "Electrical Safety Awareness"; HS5230-W, "High Voltage Safety"; HS5245, "Lock & Tag"; HS5250, "Working on Energized R&E Equipment"; and HS5210-W, "Capacitor Safety Orientation". All electrical systems shall be checked for grounding continuity. Ground Fault Circuit Interrupters (GFCIs) shall be used on power outlets, temporary power cords (120 VAC), and all power tools. When practical, mechanical barriers and interlock systems shall be used. All breaker switches are contained in cabinets with keyed locks. All electrical equipment and systems will meet LLNL electrical standards and UL standards. All applicable controls stated in the LLNL ES&H Manual, Document 16.1, "Electrical Safety", 16.2, "Work and Design Controls for Electrical Equipment", and 16.3, "LLNL Authority Having Jurisdiction Requirements for Approving Electrical Equipment, Installations and Work" shall be followed. Only qualified electricians or electrical technicians may work on electrical systems.

G-5.3. Seismic Hazard Control

Equipment greater than 5 ft tall will remain securely bolted to concrete pads to avoid damage and injury during an earthquake. To preclude injury from missile hazards (equipment or materials moving energetically due to seismic forces), any equipment or materials stored at a height of 5 ft or more shall be seismically restrained.

G-5.4. Chemical and Radiological Hazard Control

Concentrations of contaminants in the treatment system influent are generally several orders of magnitude lower than the recommended permissible exposure limits (PELs) or threshold limit values (TLVs) for these chemicals. Therefore, it is not anticipated that exposure levels in excess of PELs or TLVs will be encountered. However, precautions, such as use of personal protective equipment or clothing (i.e., gloves, safety glasses, wetting down soil, use of respirators) should be taken to prevent exposure when potential contact with contaminated, untreated ground water or dusts is possible per the requirements of LLNL ES&H Manual, Document 11.1, "Personal Protective Equipment." In addition, to prevent the ingestion of hazardous materials, workers should wash their hands prior to eating, drinking, smoking, or using restroom facilities. The Material Safety Data Sheets for the chemicals encountered at the Pit 7 Complex are maintained at the technician's office at Site 300 and in controlled documents, such as the Site Safety Plan for LLNL CERCLA Investigations at Site 300 and the O&M, Volume 1: Treatment Facility QA and Documentation. Additional information on the safe handling of chemicals can be found in the LLNL ES&H Manual, Document 14.1, "LLNL Chemical Safety Management Program." Electronic versions of Material Safety Data Sheets (MSDSs) are also available on the ChemTrack website accessible from the ES&H Manual homepage.

G-5.5. Explosives Hazard Control

Explosives treatment or handling is not anticipated as part of the O&M activities in the Pit 7 Complex at this time. When remote operations occur in the northern part of Site 300, access to the area is restricted. Workers must complete and follow the safety procedures covered in Course HS0095W "Site 300 Safety Orientation Training." This course contains information regarding signs, procedures, and controls used to minimize exposure to hazards related to Site 300 activities. Although no explosives are used in environmental restoration activities, it is imperative that workers follow the special safety and access requirements during O&M activities in this area.

G-5.6. Confined Space Hazard Control

Confined space entries are not anticipated as part of O&M activities at this time. However, technicians should be familiar with and perform all work in confined spaces in accordance with the LLNL ES&H Manual, Document 18.7, "Working in Confined Spaces." The ES&H Team will be contacted prior to entry of any confined spaces. A Confined Space Permit is required, and only qualified personnel with recent Confined Space Training are permitted to work in confined spaces. Personnel must follow the Two-Man Rule when working in confined spaces. Personnel shall contact the CAS Operator via trunked radio in case of emergency.

G-5.7. Hand and Portable Tool Hazard Control

Facility technicians and other maintenance personnel are responsible for selecting and using the proper tools for the job assigned and for wearing the appropriate personal protective equipment (i.e., safety glasses, etc.) when working with hand and portable tools. All hand and portable tools should be inspected prior to use to make sure they are not damaged and are in good-working condition. Any tool that is damaged or unfit for use should be immediately removed from service. Personnel are responsible for following the work safety standards outlined in LLNL ES&H Manual, Document 11.2, "Hazards—General and Miscellaneous" Chapter 5.0, *Hand and Portable Power Tools* and Document 19.1, "LLNL Ergonomics Program". Personnel are responsible for wearing the appropriate PPE such as safety glasses, gloves, and steel toed boots, as appropriate.

G-5.8. Working Alone Hazard Control

When working alone on a non-hazardous activity, technicians and maintenance personnel will advise a co-worker or supervisor that they will be working alone and when they expect to return. For potentially hazardous activities, technicians will: (1) exercise prudent judgment whether or not to perform the activity alone, and (2) obtain prior authorization from work supervisor before beginning planned hazardous-work-alone operations to ensure that all hazards have been thoroughly evaluated from the perspective of working alone. Work supervisors are responsible for ensuring an IWS is prepared for activities classified as hazardous for working alone. Personnel are responsible for following the work safety standards outlined in LLNL ES&H Manual, Document 11.2, "Hazards—General and Miscellaneous" Chapter 12.0, *Working Alone* and the Environmental Restoration Division Working Alone Guidelines (in ERD O&M Manual, Appendix L) for all work-alone activities.

G-5.9. Physical and Biological Hazard Control

During late spring and summer months, technicians and maintenance personnel should ingest fluids and evaluate their physical conditions regularly and break when necessary to avoid overheating. Work should be conducted in accordance with the LLNL ES&H Manual, Document 11.2, "Hazards—General and Miscellaneous" Chapters 16.0, *Heat Stress* and 19.0 *Working Outdoors*. All personnel should follow procedures outlined in the Site 300 Lightning Procedures (S300 MGM-T-7) during a lightning alert at Site 300. A lightning alert means the weather conditions are potentially conducive to lightning. Lightning alerts are announced through the Site 300 communications systems. Employees and visitors must evacuate and remain outside explosives hazard zones until a lightning alert is cleared.

Employees are notified of the Valley Fever Risk through required training courses: HS0095-W and HS0096-W. The ES&H Team Site 300 Industrial Hygienist (IH) reviews tasks, procedures, and related dust minimization protocol to determine the need for respirators and/or a Hazard Assessment and Control (HAC) document for the control of exposure potential. As a precaution, technicians and maintenance personnel should inspect work areas for snakes and other biological hazards before commencing work. The use of high top work boots is recommended. Avoid biological hazards when possible; do not harass wildlife. Anyone who is bitten should be moved to a safe area and kept calm. Notify the Emergency Dispatch by calling 911 on a LLNL land line or using a trunked hand-held radio.

G-5.10. Slip/Trip/Fall Hazard Control

Work surfaces around the treatment system should be properly maintained at all times to prevent slips, trips, and falls. Maintenance includes assuring all spills and foreign materials (i.e., tools, excess equipment, etc.) are promptly removed, installing rubber or slip resistant mats at locations that may accumulate water, and ensuring that floor openings are equipped with adequate covers when worker exposure is possible. Any access to elevated locations or work at heights requires guardrails, an administrative control system, or fall protection devices. Personnel are responsible for following the work safety standards outlined in LLNL ES&H Manual, Document 11.1, "Personal Protective Equipment" and Document 11.2, Chapters 2.0, *Housekeeping* and 17.0, *Walking and Working Surfaces*.

G-5.11. Material Handling Hazard Control

Technicians and maintenance personnel should use methods that ensure personal safety and safety of the material being handled when lifting or handling materials manually. Objects that are too heavy or bulky to handle safely should be moved using more than one person or mechanical lifting device. All material lifting or handling should be performed in accordance with the safety standards and procedures for lifting contained in the LLNL ES&H Manual, Document 15.2, "Manual and Mechanical Material Handling."

G-5.12. Mechanical Motion Hazard Control

Any machine part, function, or process, which may cause injury shall either be guarded (physical barriers which prevent access to danger areas) or safeguarded (provided with devices which inhibit machine operation, to mitigate or eliminate danger areas).

Machine operators shall be trained in the proper use of equipment and associated guards/safeguards to protect themselves and others from machine-related hazards. Machine operators shall wear protective clothing or personal protective equipment as necessary whenever engineering controls are not available or are not fully capable of protecting personnel. At a minimum, all personnel operating or working within close proximity of heavy machinery or equipment shall wear safety shoes and safety glasses. When there is a potential for head injury, hard hats shall be worn. Additional details for personal protective equipment are contained in the LLNL ES&H Manual, Document 11.1.

G-5.13. Fire Hazard Control

As part of the LLNL program to control fire hazards, permits are required for welding, soldering, and other hot-work operations with a high fire potential. The permits are obtained from the LLNL Fire Department at Site 300. Work areas shall be maintained in a fire-safe condition, including ensuring that the work site is accessible to the Fire Department. Technicians will obtain fire permits for all soldering or welding work with a high fire potential. This work will be also be conducted in accordance with the requirements of the LLNL ES&H Manual, Document 22.5, "Fire", LLNL Fire Protection Program Manual, and National Fire Protection Association (NFPA) 51 (Standard for Fire Prevention During Welding, Cutting, or Other Hot Work).

In addition, technicians must obtain approval to access any work site that requires off-pavement travel as defined by the LLNL "Restricted Off-Pavement Travel at Site 300" policy manual. Technicians planning to travel off-pavement must receive prior permission from the Site 300 Manager, the Functional Area Supervisor, and the CAS Operator and carry a trunked radio for communications. In addition, appropriate training is required for all personnel engaging in off-road travel at Site 300. Personnel should not park or drive through dry, tall grass. Technicians performing off-road travel during O&M activities shall be familiar with the "Restricted Off-Pavement Travel at Site 300" manual (LLNL, 2007), LLNL ES&H Manual, Document 21.3, Chapter 4.0, *Off Pavement Travel*, and IWS 11313.

In case of fire, contact the LLNL Fire Department by dialing 911 from an LLNL land line or contact the Emergency Dispatcher using a hand-held trunked radio.

G-6. Stop Work Procedures

LLNL's stop-work procedure applies to all work done at the Laboratory. Activities that are imminently dangerous to workers, the public, or the environment shall be stopped immediately by any Laboratory employee, supplemental labor employee, or contractor. Each worker is empowered to stop work if there is a perceived unsafe or unapproved condition. "Stopping work" includes stabilizing an imminent danger situation to the extent that it can be left unattended for a prolonged period of time until the issue is resolved. The person requesting the work stoppage shall notify the manager responsible for the work. The manager shall notify the area ES&H Team and the Directorate ES&H Assurance Manager as soon as possible of this action. Informal stop work interventions to correct minor conditions (e.g., to remind workers to put on their hard hats, safety glasses etc.) do not require formal notification. Details of the Stop Work Process are included in the LLNL ES&H Manual, Document 2.1, "Laboratory and ES&H Policies, General Worker Responsibilities, and Integrated Safety Management."

G-7. Environmental Concerns and Controls

G-7.1. Ground Water Extraction and Treatment System

Concern:

- Discharge of untreated ground water.

Controls:

- Interlocks shut off the system and the flow of air and water if physical damage to key treatment system components occurs.
- Scheduled sampling per Substantive Requirements monitors treated ground water discharge.
- Facility operator inspects the system periodically.

G-7.2. Drainage Diversion System

Concern:

- None

G-8. Training

G-8.1. Basic Treatment System Operator Courses

The following courses are required for the Pit 7 Complex ground water extraction and treatment system operators:

- HS-0039 SARA/OSHA Training (40-hour course with yearly refreshers).
- HS-0001 New Employee Safety Orientation.
- HS-1620 Standard First Aid (First Aid Certification valid for 2 years).
- HS-5300 Back Care Workshop.
- HS-5605 Driving the Site 300 Trails.
- HS-5606W LLNL Radio Course.
- HS-0095 Site 300 Safety.
- HS-0096 Valley Fever.
- HS-2080 Site 300 Explosives Safety Training for Crafts, Protective Services, and Fire Personnel.

There are no training requirements stipulated for the inspection, maintenance, and repair of the drainage diversion system.

G-8.2. Selective Training Courses

The following courses may be required when they apply to the tasks assigned to the treatment system operator:

- HS-0006 Hazardous Waste Handling Practices (refresher training required annually).
- HS-4150 Confined Space Entry.
- HS-4240 Chemical Safety.
- HS-5220 Electrical Safety (required every 5 years).
- HS-5245 Lockout and Tag Procedure (refresher training required every 5 years).

G-8.3. Training Responsibilities and Documentation

Training courses identified in this section do not qualify a person to operate the treatment equipment and treatment systems or inspect and maintain the drainage diversion system located in the Pit 7 Complex. Only the responsible individual(s) identified in Section G-3 of this Health and Safety Plan will determine if and when a person is qualified to operate the treatment

facilities. Once qualified, the Technician Supervisor records that the technician has been qualified as a treatment system operator.

The responsible individual, or designee, shall ensure that all required training (including on-the-job training if applicable) is completed and documented in the LLNL Laboratory Training Records and Information Network. Untrained personnel may work under the supervision of a trained person until the required training is completed.

G-9. Maintenance

Items requiring periodic maintenance do not impact the safety of the treatment facility or drainage diversion system operations. Treatment facility interlocks shall be tested annually.

G-10. Quality Assurance

O&M activities at the Pit 7 Complex extraction and treatment facility shall be controlled by quality procedures designed to meet ground water treatment and discharge requirements specified by the RWQCB. Controls to prevent the discharge of untreated ground water and meet quality objectives include:

- Annual interlock function checks shall be performed by the Facility Electronics Staff or Plant Engineering Electronic Engineering Staff. Test documentation shall be maintained by the Facility Electronics Supervisor, or designee.
- Scheduled weekly, monthly, quarterly, and annual sampling of water to ensure compliance and quality.
- Treatment system-related analytical data will be reviewed by the Quality Control Chemist or designee to ensure the data meets quality objectives.

O&M activities at the Pit 7 Complex drainage diversion system shall be controlled by the quality and operations and maintenance procedures and schedule outlined in the Operations and Maintenance Plan (Winzler and Kelly, 2007) and summarized in Appendix F, Table F-3.

G-11. Emergency Response Procedures

In the event of an emergency, treatment system operations personnel will first dial 911 using an LLNL land line or using a hand-held trunked radio to report to the Emergency Dispatcher, then administer first aid, if necessary and if trained appropriately, to injured personnel. The Emergency Dispatcher uses reserved telephone lines to promptly relay the emergency call to the following members of the LLNL Emergency Response Team:

- Fire Department.
- Security Department.
- Hazards Control Safety Teams.
- Plant Engineering.
- Health Services.

The Emergency Response Team will go to the scene of the emergency immediately. The phone numbers of individuals to be notified in the event of an emergency during off-shift hours are posted at the Pit 7 Complex treatment system. The LLNL ES&H Manual describes the emergency response procedures in Document 22.1, "Emergency Preparedness and Response" and Document 22.2, "Environmental Emergency Response."

The Site 300 Environmental Restoration Division Emergency Self-Help Plans for buildings 843 and 835 and trailer 8726 outline the self-help procedures personnel follow in the event of a disaster.

G-12. Applicable Documents

The following documents and/or sections thereof apply to the safe operation of the Pit 7 Complex ground water extraction and treatment system and drainage diversion system and are incorporated into this Health and Safety Plan by reference.

G-12.1. Integration Work Sheets (IWSs)

#11313 Site 300 Off Road 4 Wheel Driving Training and Restricted Travel to Perform ERD Activities

#11314 ERD Site 300 Ion Exchange Resin Replacement

#11324 ERD Site 300 Tractor and Forklift Operation

#11325 Post Well Completion, Testing, Evaluation, Construction and Demolition of Wells and Treatment Equipment

#11339 ERD Site 300 Hydraulic Pump Truck Operation

#11340 B843 Machine Shop Operations

#11341 Ground Water And Soil Vapor Treatment Facility Operations at Site 300

#11343 Routine Ground Water and Water Level Monitoring

#11346 Recycling spent activated carbon by contractor

#11579 ERD Electronic Routine Electronic Operations

G-12.2. LLNL Environment, Safety, and Health Manual Sections

Document 2.1 Laboratory and ES&H Policies, General Worker Responsibilities, and Integrated Safety Management

Document 2.5 Procured Services Subcontractor Environment, Safety, and Health Program

Document 11.1 Personal Protective Equipment

Document 11.2 Hazards—General and Miscellaneous

Chapter 2.0 Housekeeping

Chapter 5.0 Hand and Portable Power Tools

Chapter 12.0 Working Alone

Chapter 16.0 Heat Stress

Chapter 17.0 Walking and Working Surfaces

Chapter 19.0 Working Outdoors

Document 12.6 LLNL Lockout/Tagout Program

Document 14.1 LLNL Chemical Safety Management Program

Document 15.2 Manual and Mechanical Material Handling

Document 16.1 Electrical Safety

Document 16.2 Work and Design Controls for Electrical Equipment

Document 16.3 LLNL Authority Having Jurisdiction Requirements for Approving Electrical Equipment, Installations and Work

Document 18.6 Hearing Conservation

Document 18.7 Working in Confined Spaces

Document 19.1 LLNL Ergonomics Program

Document 21.3 Vehicle Operations and Traffic

Chapter 4.0 Off-Pavement Travel

Document 22.1 Emergency Preparedness and Response

Document 22.2 Environmental Emergency Response

Document 22.5 Fire

G-12.3. Site Safety Plan for LLNL CERCLA Investigations at Site 300, November 2005

6.1. Chemical Hazards

6.2. Biological Hazards

6.3. Physical Hazards

6.4. General Safety Hazards

7.6. Fire

8.1. Personal Protection

9.1. Hazardous Waste Operations and General Safety Requirements

Table 3-3. Hazards and controls associated with Site 300 environmental restoration activities.

G-12.4. Site 300 Environmental Restoration Emergency Self-Help Plans

Site 300 Trailer 8726

Site 300 Building 835

Site 300 Building 843

G-12.5. Treatment Facility Operating Manuals for the Pit 7 Complex Ground Water Extraction and Treatment System

Operations and Maintenance Manual Volume 1: Treatment Facility Quality Assurance and Documentation

Operations and Maintenance Manual, Volume XIII: Miniature Treatment Units (MTUs), Granular Activated-Carbon Treatment Units (GTUs), and Solar Treatment Units (STUs), March 2007.

G-12.6. LLNL Livermore Site and Site 300 Environmental Restoration Project Standard Operating Procedures (SOPs) (Goodrich and Wimborough, 2006)

SOP-2.2 Field Measurements on Surface and Ground Waters

SOP-2.3 Sampling Monitor Wells with Bladder and Electric Submersible Pumps, and Specific-Depth Grab Sampling Devices

SOP-2.6 Sampling for Volatile Organic Compounds

SOP-2.9 Sampling for Tritium in Ground Water

SOP-3.1 Water-Level Measurements

SOP-4.1 General Instructions for Field Personnel

SOP-4.2 Sample Control and Documentation

SOP-4.3 Sample Containers and Preservation

SOP-4.4 Guide to Packaging and Shipping of Samples

SOP-4.5 General Equipment Decontamination

SOP-4.7B Site 300 Treatment and Disposal of Well Development and Well Purge Fluids

SOP-4.8 Calibration/Verification and Maintenance of Field Instruments Used in Measuring Parameters of Surface Water, Ground Water, and Soils

SOP-4.9 Collection of Field QC Samples

SOP-4.12 Quality Improvement Forms (QIFs)

SOP-4.16 ERD Lockout/Tagout Program

SOP-4.17 Change of Aqueous and Vapor Phase Granular Activated Carbon

G-13. References

Goodrich, R., and J. Wimborough (2006), *LLNL Livermore Site and Site 300 Environmental Restoration Project Standard Operating Procedures (SOPs)*, Lawrence Livermore National Laboratory, Livermore, Calif. (UCRL-109115 Rev. 12).

LLNL (2005), *Site Safety Plan for Lawrence Livermore National Laboratory CERCLA Investigations at Site 300*, Lawrence Livermore National Laboratory, Livermore, Calif. (UCRL-21172 Rev. 3).

LLNL (2002), *Fire Protection Program Manual*, Lawrence Livermore National Laboratory, Livermore, Calif. (UCRL-MA-116646, Rev. 1).

LLNL (2004), LLNL Site 300 Environment Restoration Division Emergency Self-Help Plan, Trailer 8726.

LLNL (2004), LLNL Site 300 Environment Restoration Division Emergency Self-Help Plan, Building 835.

LLNL (2004), LLNL Site 300 Environment Restoration Division Emergency Self-Help Plan, Building 843.

LLNL (2001), *Restricted Off-Pavement Travel at Site 300*, Lawrence Livermore National Laboratory, Livermore, Calif. (UCRL-MI-144038).

LLNL (2007), LLNL Environment, Safety, and Health Manual.

LLNL (2004), Operations and Maintenance Manual Volume 1: Treatment Facility Quality Assurance and Documentation.

Winzler and Kelly Consulting Engineers (2007), Operations and Maintenance Plan for the Pit 7 Complex Drainage Diversion System, August 14, 2007.

Appendix H

Title II Design Drawings for the Drainage Diversion System

Appendix H

Table of Contents

H-1. 100% Title II Design for the Drainage Diversion System at the Pit 7 Complex.

H-2. San Joaquin County Hydrology Manual Intensity-Duration-Frequency Tables B-10 through B-13.

Section H-1.

100% Title II Design for the Drainage Diversion System at the Pit 7 Complex

4 INCHES ON ORIGINAL

PIT 7 COMPLEX
DRAINAGE DIVERSION SYSTEM

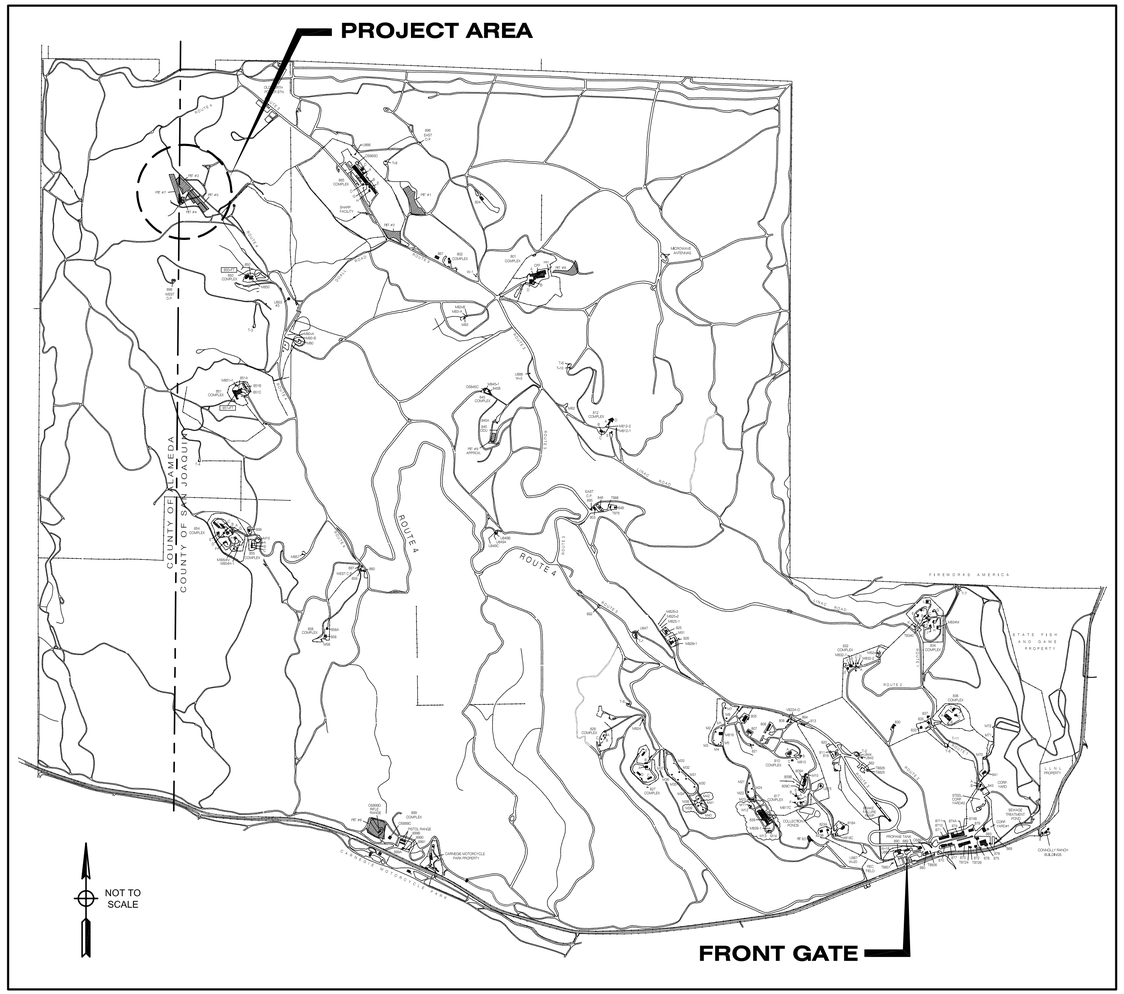

LOCATION MAP - SITE 300

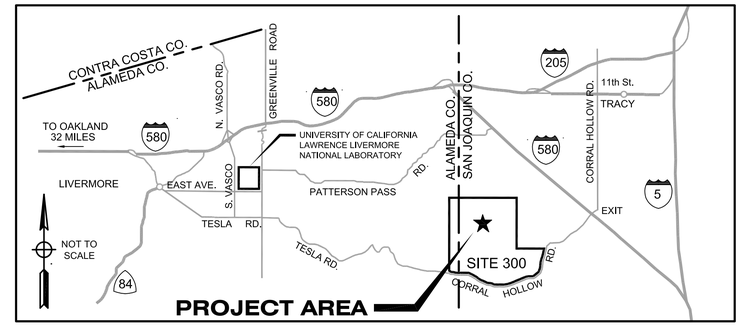

VICINITY MAP

DRAWING INDEX

DRAWING NO.	SHEET NO.	DRAWING TITLE
1	T-1	VICINITY MAP, LOCATION MAP, AND DRAWING INDEX
2	C-1	SITE IMPROVEMENT PLAN
3	C-2	DRAINAGE PLAN AND PROFILE
4	C-3	DRAINAGE PLAN AND PROFILE
5	C-4	CIVIL DETAILS
6	C-5	CIVIL DETAILS
7	C-6	CIVIL DETAILS
8	C-7	CIVIL DETAILS
9	S-1	ABBREVIATIONS, LEGEND, AND GENERAL STRUCTURAL NOTES
10	S-2	TYPICAL STRUCTURAL DETAILS
11	S-3	SETTLING BASIN PLAN
12	S-4	STRUCTURAL DETAILS

RELEASED FOR CONSTRUCTION	
PE Dept. Head:	Date:

APPROVED BY	
Client:	Date:
Proj. Manager:	Date:
Design:	Date:

REVIEWED BY	
M & O:	Date:
Haz. Ctrl:	Date:
Security	Date:
S & S P:	Date:

No.	Date	Revision	Dwn	Chk	D/C	PM	CL
1	09/14/07	FINAL% SUBMITTAL	PS	SRR		SRR	
2	08/16/07	100% SUBMITTAL	PS	SRR		SRR	
3	06/22/07	65% SUBMITTAL	VHS	SRR		SRR	

CERRUDO CS SERVICES
74 Digital Drive, No. 1
Novato, CA 94949
(415) 883-5017
(415) 883-5021(fax)

WINZLER&KELLY
CONSULTING ENGINEERS
417 Montgomery Street, Suite 700, San Francisco, CA 94104-1115
tel 415.283.4970 ♦ fax 415.283.4980 ♦ www.w-and-k.com

Lawrence Livermore National Laboratory
Plant Engineering, Livermore, CA 94550

PIT 7 COMPLEX DRAINAGE
DIVERSION SYSTEM

VICINITY MAP, LOCATION MAP,
AND DRAWING INDEX

REGISTERED PROFESSIONAL ENGINEER
SEAN R. RUSK
C 64314
EXP. 06/30/09
CIVIL
STATE OF CALIFORNIA
PE Stamp

Des: SRR, VHS, MD, KO	09-12-07	Scale:	
Dwn: VHS	09-13-07	PFNID: 300-2007-001	
Chk: SRR	09-12-07	S/W: AUTOCAD 2006	
Dwg. No. PLZ2007-0300-0001D		Sht. No. T-1	1 of 12

FILE NAME: P:\Projects\07\03398-07-001 Cerrudo LLNL\CAD\3-FINAL SUBMITTAL09-18-07\T-1.dwg DATE PLOTTED: September 18, 2007 - 4:20 PM

4 INCHES ON ORIGINAL

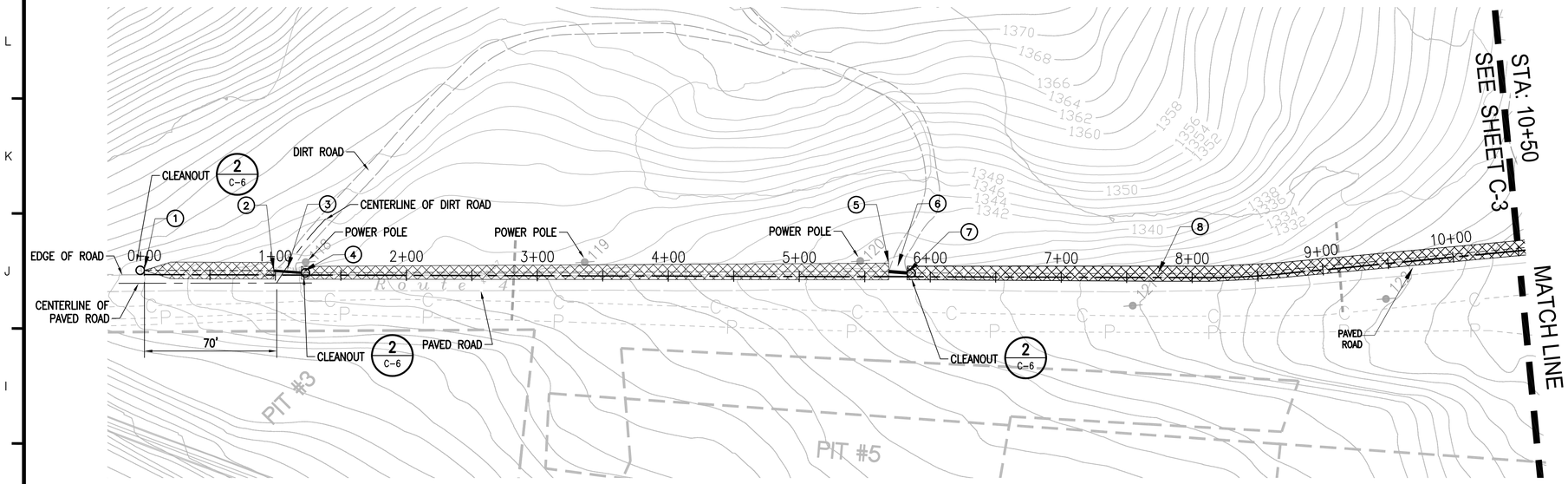

1 DRAINAGE – PLAN
1"=50'

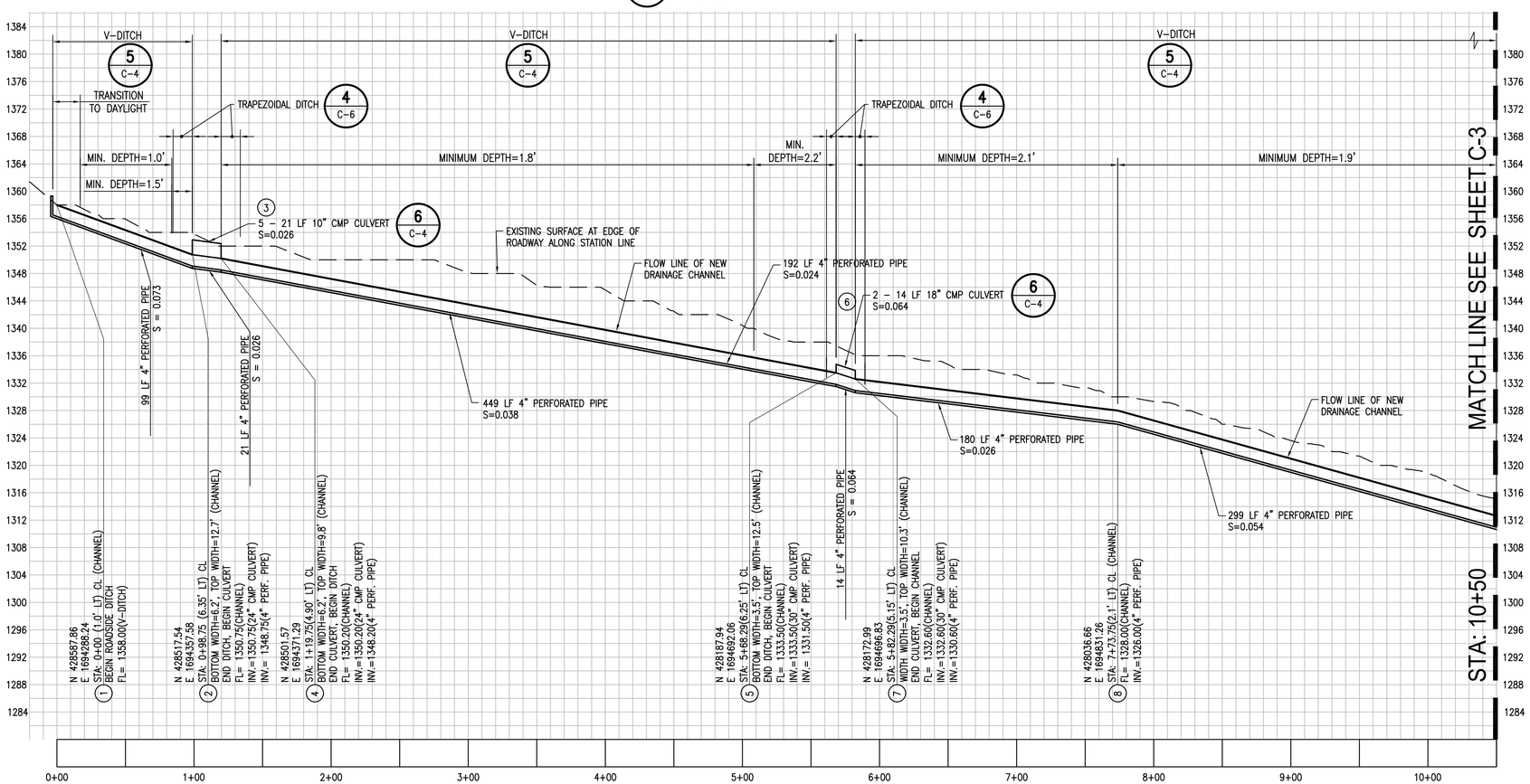

2 DRAINAGE – PROFILE
1"=50' H 1"=10' V

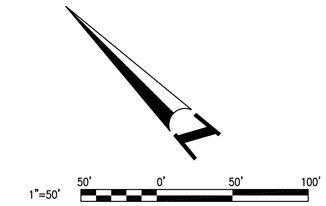

NOTES:

1. CHANNEL WIDTH INCREASES/DECREASES LINEARLY BETWEEN CROSSINGS.
2. CONTRACTOR SHALL RELOCATE POWER POLES IF THE POWER POLES INTERFERE WITH NEW DRAINAGE CHANNELS.

No.	Date	Revision	Dwn	Chk	D/C	PM	CL
1	09/14/07	FINAL% SUBMITTAL	PS	SRR		SRR	
2	08/16/07	100% SUBMITTAL	PS	SRR		SRR	
3	06/22/07	65% SUBMITTAL	VHS	SRR		SRR	

CERRUDO CS SERVICES
74 Digital Drive, No. 1
Novato, CA 94949
(415) 883-5017
(415) 883-5021(fax)

WINZLER & KELLY CONSULTING ENGINEERS
417 Montgomery Street, Suite 700, San Francisco, CA 94104-1115
tel 415.283.4970 ♦ fax 415.283.4980 ♦ www.w-and-k.com

Lawrence Livermore National Laboratory
Plant Engineering, Livermore, CA 94550

PIT 7 COMPLEX DRAINAGE DIVERSION SYSTEM

DRAINAGE PLAN AND PROFILE

Des: SRR, VHS, MD, KO	09-12-07	Scale: AS SHOWN
Dwn: VHS	09-13-07	PFNID: 300-2007-001
Chk: SRR	09-12-07	S/W: AUTOCAD 2006
Dwg. No. PLZ2007-0300-0003D		Sht. No. C-2 3 of 12

REGISTERED PROFESSIONAL ENGINEER SEAN R. RAMSEY C 54314 EXP. 06/30/09 CIVIL STATE OF CALIFORNIA

PE Stamp

FILE NAME: P:\Projects\07\03398-07-001 Cerrudo LLNL\CAD\3-FINAL SUBMITTAL09-18-07\C-2,C-3.dwg DATE PLOTTED: September 18, 2007 – 4:19 PM

4 INCHES ON ORIGINAL

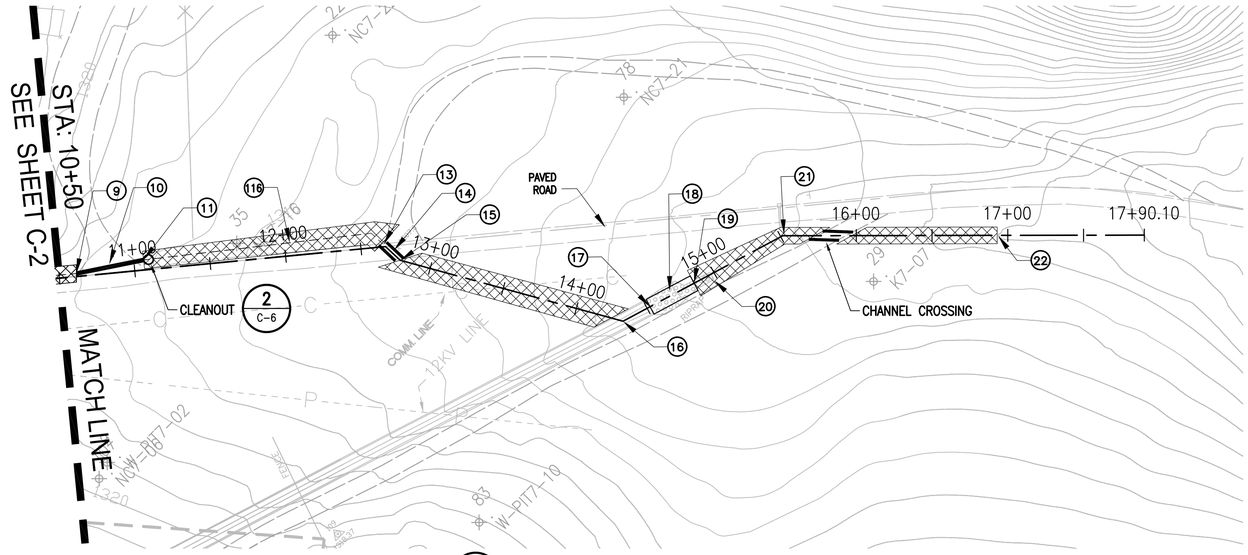

1 DRAINAGE – PLAN
1"=50'

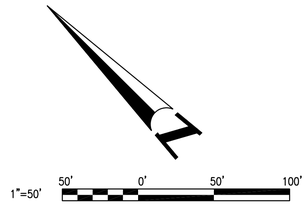

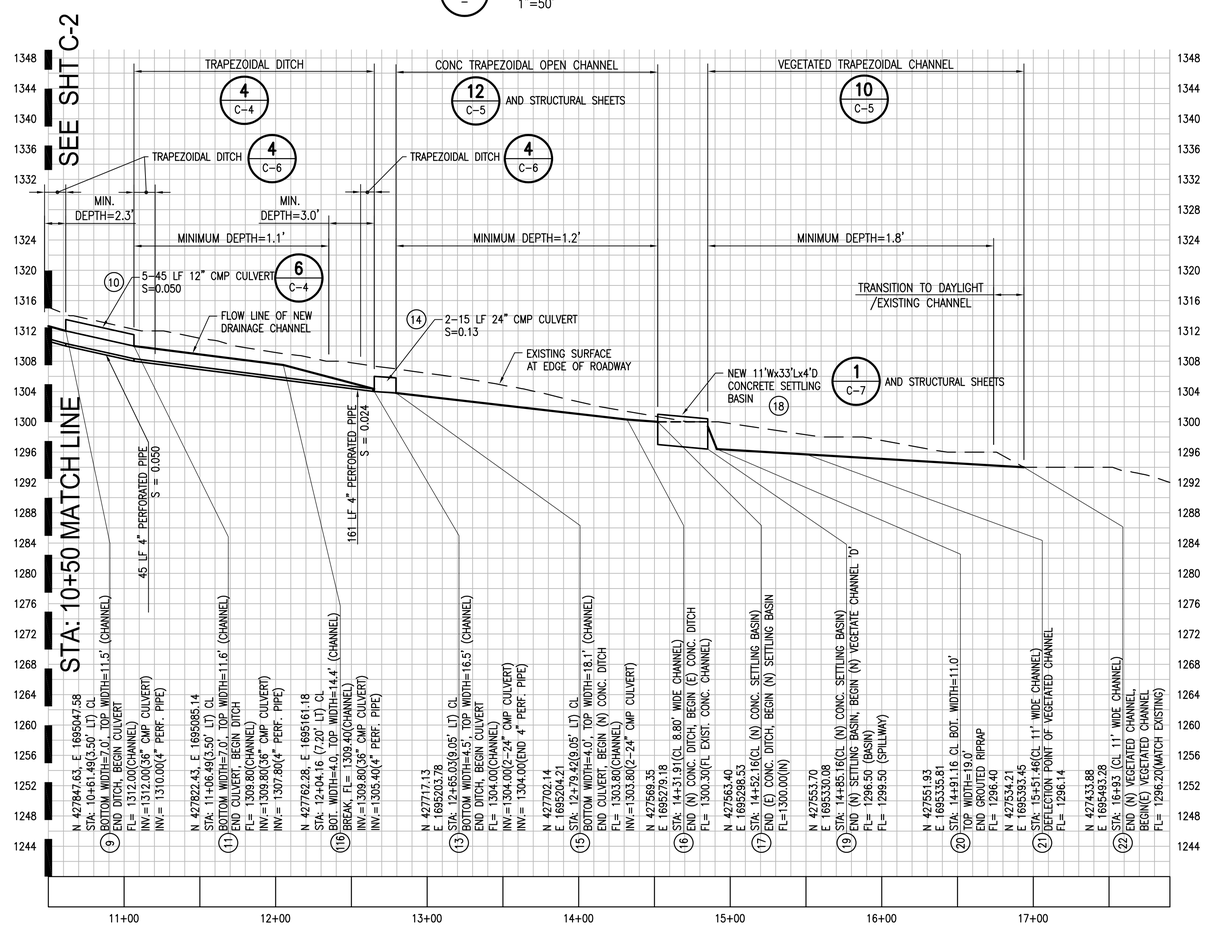

2 DRAINAGE – PROFILE
1"=50' H 1"=10' V

No.	Date	Revision	Dwn	Chk	D/C	PM	CL
3	09/14/07	FINAL% SUBMITTAL	PS	SRR		SRR	
2	08/16/07	100% SUBMITTAL	PS	SRR		SRR	
1	06/22/07	65% SUBMITTAL	VHS	SRR		SRR	

CERRUDO CS SERVICES
74 Digital Drive, No. 1
Novato, CA 94949
(415) 883-5017
(415) 883-5021(fax)

WINZLER&KELLY
CONSULTING ENGINEERS
417 Montgomery Street, Suite 700, San Francisco, CA 94104-1115
tel 415.283.4970 ♦ fax 415.283.4980 ♦ www.w-and-k.com

Lawrence Livermore National Laboratory
Plant Engineering, Livermore, CA 94550

PIT 7 COMPLEX DRAINAGE DIVERSION SYSTEM

DRAINAGE PLAN AND PROFILE

Des: SRR, VHS, MD, KO	09-12-07	Scale: AS SHOWN
Dwn: VHS	09-13-07	PFNID: 300-2007-001
Chk: SRR	09-12-07	S/W: AUTOCAD 2006
Dwg. No. PLZ2007-0300-0004D		Sht. No. C-3 4 of 12

REGISTERED PROFESSIONAL ENGINEER SEAN R. RODGERS C 64314 EXP. 06/30/09 CIVIL STATE OF CALIFORNIA

PE Stamp

FILE NAME: P:\Projects\07\03398-07-001 Cerrudo LLNL\CAD\3-FINAL SUBMITTAL09-18-07\C-2,C-3.dwg DATE PLOTTED: September 18, 2007 – 4:19 PM

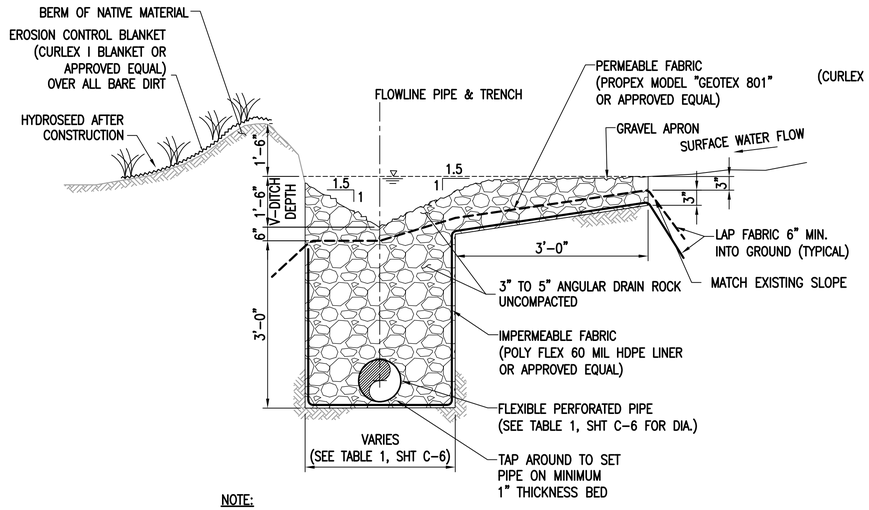

NOTE:

1. CONTRACTOR SHALL INSTALL THE EROSION CONTROL BLANKET PER MANUFACTURER'S RECOMMENDATION.

1 / C-1 TYPICAL CROSS SECTION UPPER DRAINAGE SEGMENTS B, F, AND H

NOT TO SCALE

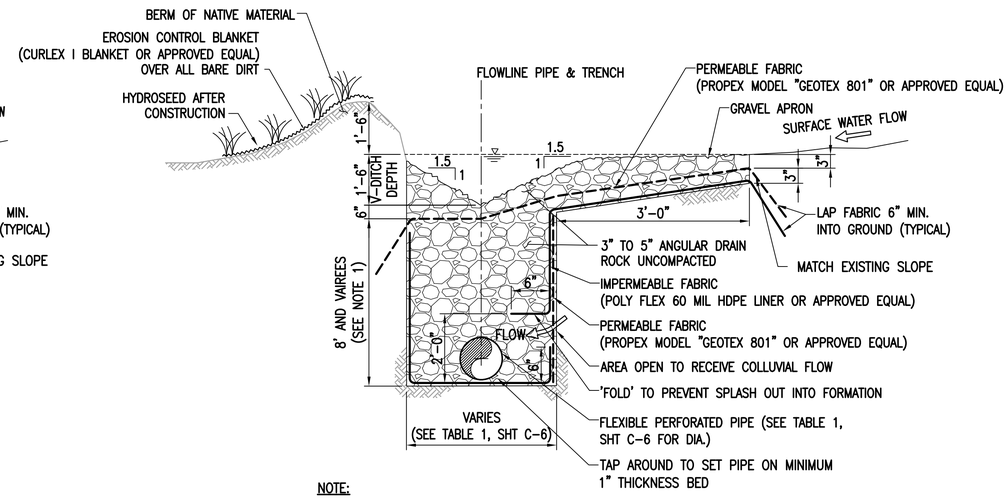

NOTE:

1. CONTRACTOR SHALL INSTALL THE EROSION CONTROL BLANKET PER MANUFACTURER'S RECOMMENDATION.
2. AT TRANSITIONS TO SEGMENT A, D, E, AND J, THE CONTRACTOR SHALL ANGLE THE TRENCH DOWNHILL SO THAT THE DEPTH OF TRENCH C, G, I, K, AND L MATCH DEPTH OF TRENCH AT A, D, E, AND J AT CONNECTION POINTS. A MINIMUM 4% DOWNHILL SLOPE SHALL BE MAINTAINED AT ALL PERFORATED PIPES.

2 / C-1 TYPICAL CROSS SECTION UPPER DRAINAGE SEGMENTS C, G, I, K, AND L

NOT TO SCALE

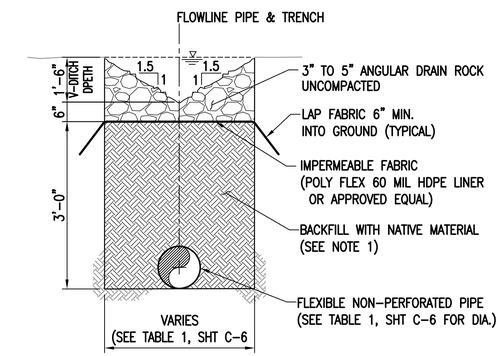

NOTE:

1. AS TRENCH APPROACHES EXISTING CONCRETE CHANNEL OUTFALL (SEE SHEET C-5, DETAIL 9) DAYLIGHT PIPE THROUGH SLOPE OVER TOP OF CHANNEL.

3 / C-1 (C-5) TYPICAL CROSS SECTION WEST SIDE DRAINAGE SEGMENTS A, E, D, AND J

NOT TO SCALE

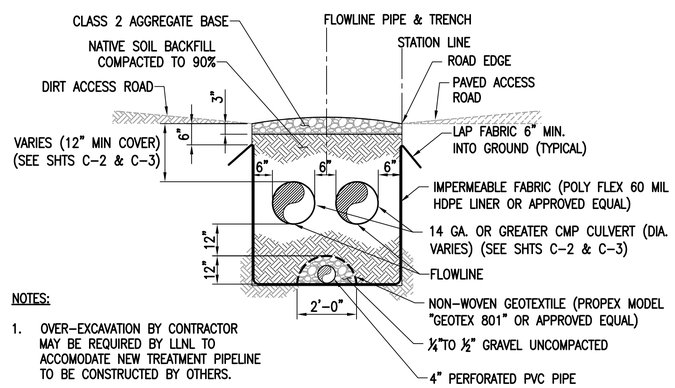

NOTES:

1. OVER-EXCAVATION BY CONTRACTOR MAY BE REQUIRED BY LLNL TO ACCOMODATE NEW TREATMENT PIPELINE TO BE CONSTRUCTED BY OTHERS.

6 / C-2 (C-3) TYPICAL CROSS SECTION CULVERT REACHES

NOT TO SCALE

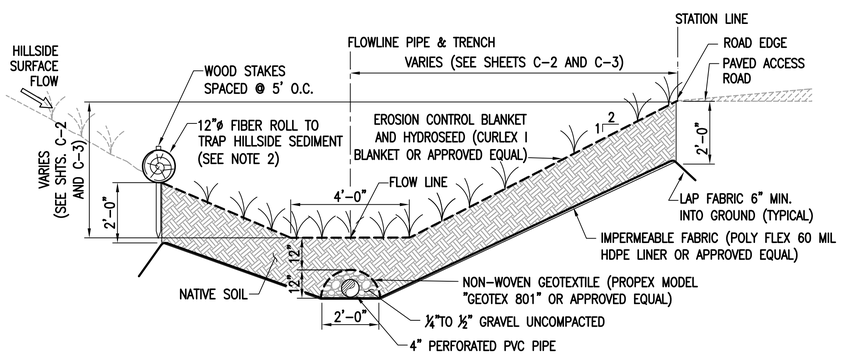

NOTES:

1. CONTRACTOR SHALL TAKE SPECIAL PRECAUTION WHEN EXCAVATING NEAR ADJACENT POWER POLES SHOWN ON SHEET C-1.
2. FIBER ROLL MAKE AND MODEL: NEDIA ENTERPRISES, COCONUT FIBER LOG, "KOIR LOG 12" OR APPROVED EQUAL. INSTALL PER MANUFACTURER'S SPECIFICATIONS.
3. SEE DETAIL 2 SHEET C-6 FOR CLEANOUT DETAIL.
4. CONTRACTOR SHALL MAINTAIN A 3' RADIUS OF NON-VEGETATED AREA AROUND POWER POLES IN THIS AREA. RIP-RAP SHALL BE PLACED A MINIMUM OF 6" BELOW GROUND SURFACE AND A MAXIMUM OF 6" ABOVE GROUND SURFACE.
5. CONTRACTOR SHALL INSTALL THE EROSION CONTROL BLANKET PER MANUFACTURER'S RECOMMENDATION.

4 / C-3 TYPICAL CROSS SECTION TRAPEZOIDAL DITCH VEGETATED SWALES REACHES

NOT TO SCALE

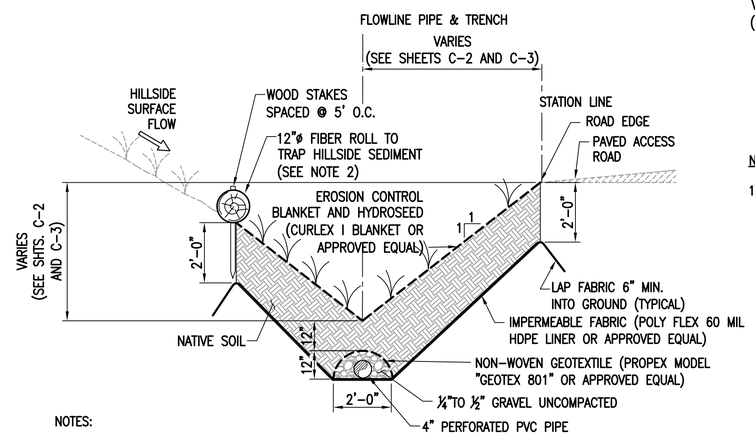

NOTES:

1. CONTRACTOR SHALL TAKE SPECIAL PRECAUTION WHEN EXCAVATING NEAR ADJACENT POWER POLES SHOWN ON SHEET C-1.
2. FIBER ROLL MAKE AND MODEL: NEDIA ENTERPRISES, COCONUT FIBER LOG, "KOIR LOG 12" OR APPROVED EQUAL. INSTALL PER MANUFACTURER'S SPECIFICATIONS.
3. AT ROAD CROSSINGS PROVIDE FLAT BOTTOM WIDTH EQUAL TO CULVERT DIA. FOR 2-3 FT. THEN TRANSITION TO V-DITCH CROSS SECTION.
4. SEE DETAIL 2 SHEET C-6 FOR CLEANOUT DETAIL.
5. CONTRACTOR SHALL MAINTAIN A 3' RADIUS OF NON-VEGETATED AREA AROUND POWER POLES IN THIS AREA. RIP-RAP SHALL BE PLACED A MINIMUM OF 6" BELOW GROUND SURFACE AND A MAXIMUM OF 6" ABOVE GROUND SURFACE.
6. CONTRACTOR SHALL INSTALL THE EROSION CONTROL BLANKET PER MANUFACTURER'S RECOMMENDATION.

5 / C-2 TYPICAL CROSS SECTION V-DITCH VEGETATED SWALES

NOT TO SCALE

No.	Date	Revision	Dwn	Chk	D/C	PM	CL
4	09/14/07	FINAL% SUBMITTAL	PS	SRR		SRR	
3	08/16/07	100% SUBMITTAL	PS	SRR		SRR	
2	06/22/07	65% SUBMITTAL	VHS	SRR		SRR	

CERRUDO CONSULTING SERVICES
74 Digital Drive, No. 1
Novato, CA 94949
(415) 883-5017
(415) 883-5021(fax)

WINZLER & KELLY CONSULTING ENGINEERS
417 Montgomery Street, Suite 700, San Francisco, CA 94104-1115
tel 415.283.4970 ♦ fax 415.283.4980 ♦ www.w-and-k.com

Lawrence Livermore National Laboratory
Plant Engineering, Livermore, CA 94550

PIT 7 COMPLEX DRAINAGE DIVERSION SYSTEM

CIVIL DETAILS

REGISTERED PROFESSIONAL ENGINEER SEAN R. RAGAN C 64314 EXP. 06/30/09 CIVIL STATE OF CALIFORNIA

PE Stamp

Des: SRR, VHS, MD, KO	09-12-07	Scale:
Dwn: VHS	09-13-07	PFNID: 300-2007-001
Chk: SRR	09-12-07	S/W: AUTOCAD 2006
Dwg. No. PLZ2007-0300-0005D		Sht. No. C-4 5 of 12

FILE NAME: P:\Projects\07\03398-07-001 Cerrudo LLNL\CAD\3-FINAL SUBMITTAL09-18-07\C-4.dwg DATE PLOTTED: September 18, 2007 - 4:19 PM

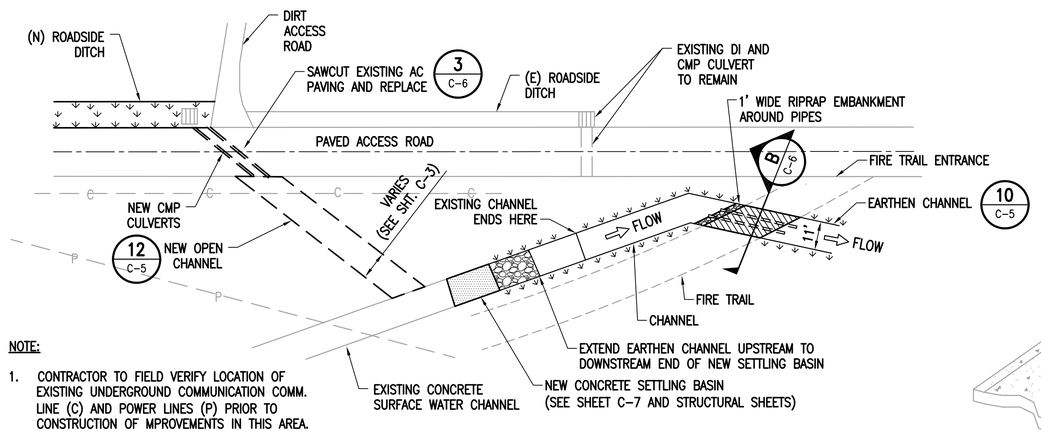

NOTE:

1. CONTRACTOR TO FIELD VERIFY LOCATION OF EXISTING UNDERGROUND COMMUNICATION COMM. LINE (C) AND POWER LINES (P) PRIOR TO CONSTRUCTION OF MPROVEMENTS IN THIS AREA.

5 / C-1 CONCRETE SETTLEMENT BASIN WITH D.I. / CMP

NOT TO SCALE

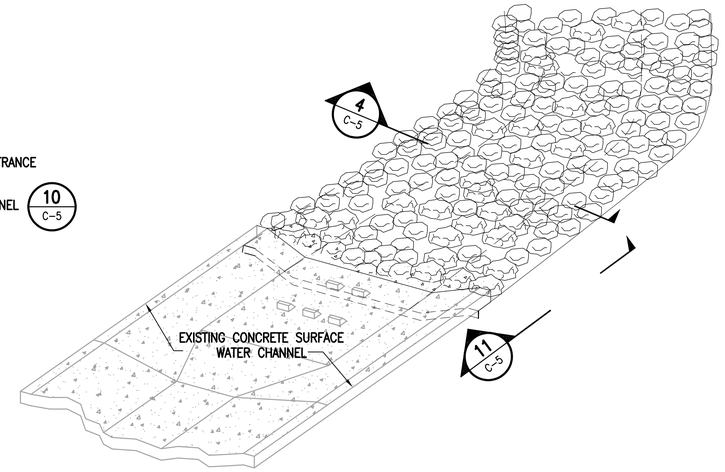

8 / C-5 CONCRETE CHANNEL

NOT TO SCALE

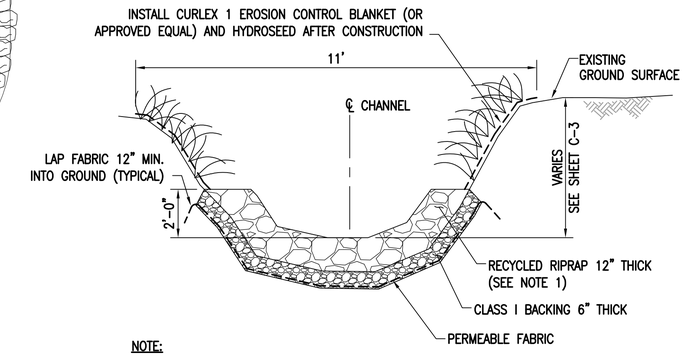

NOTE:

1. RE-USE RIPRAP (APPROXIMATELY 12" TO 18" DIA.) FROM ON-SITE STOCK PILES AT END OF CONCRETE CHANNEL.
2. CONTRACTOR TO INSTALL THE EROSION CONTROL BLANKET PER MANUFACTURER'S RECOMMENDATION.

10 / C-1 (C-5) VEGETATED CHANNEL BANK PROTECTION

NOT TO SCALE

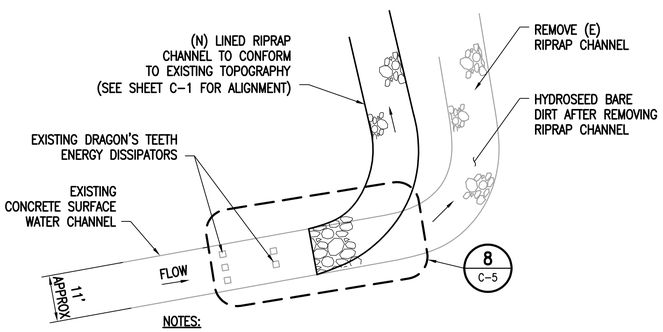

NOTES:

1. RE-USE (E) RIPRAP FROM (E) CHANNEL FOR (N) CHANNEL,
2. USE EXCAVATED MATERIAL FROM (N) CHANNEL TO FILL (E) CHANNEL BEFORE HYDROSEEDING.

6 / C-1 NORTH SIDE RIPRAP CHANNEL

NOT TO SCALE

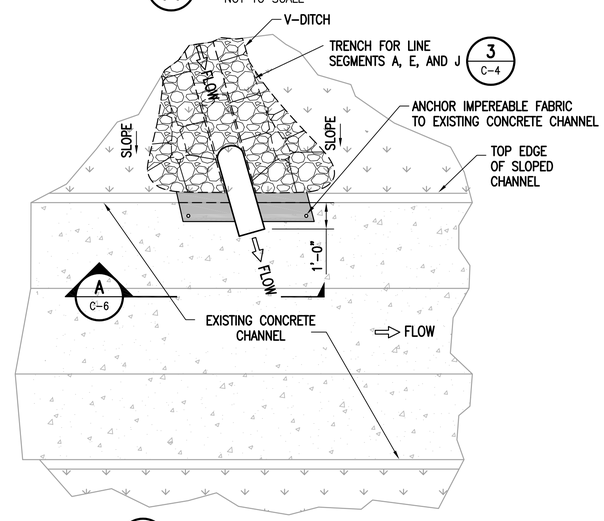

9 / C-1 DRAINAGE OUTFALL

NOT TO SCALE

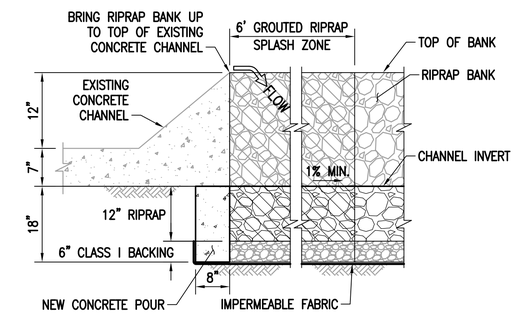

11 / C-5 SECTION

NOT TO SCALE

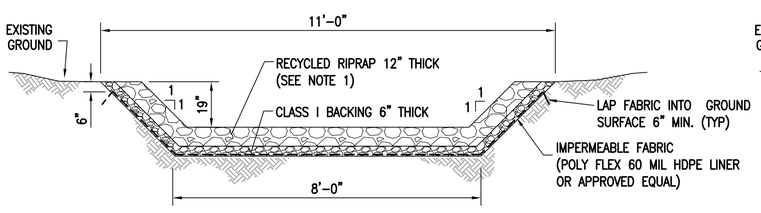

NOTE:

1. RE-USE RIPRAP FROM EXISTING CHANNEL DOWNSTREAM OF NORTH SETTLING BASIN.

4 / C-5 RIPRAP CHANNEL SECTION

NOT TO SCALE

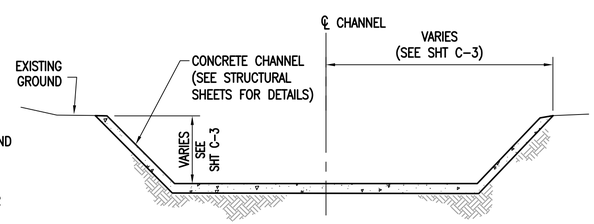

12 / C-3 (C-5) CONCRETE OPEN CHANNEL

NOT TO SCALE

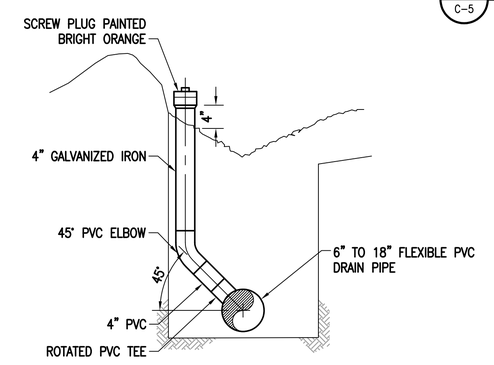

13 / C-1 CLEANOUT DETAIL

NOT TO SCALE

No.	Date	Revision	Dwn	Chk	D/C	PM	CL
3	09/14/07	FINAL% SUBMITTAL	PS	SRR		SRR	
2	08/16/07	100% SUBMITTAL	PS	SRR		SRR	
1	06/22/07	65% SUBMITTAL	VHS	SRR		SRR	

CERRUDO CS SERVICES
74 Digital Drive, No. 1
Novato, CA 94949
(415) 883-5017
(415) 883-5021(fax)

WINZLER&KELLY CONSULTING ENGINEERS
417 Montgomery Street, Suite 700, San Francisco, CA 94104-1115
tel 415.283.4970 ♦ fax 415.283.4980 ♦ www.w-and-k.com

Lawrence Livermore National Laboratory
Plant Engineering, Livermore, CA 94550

PIT 7 COMPLEX DRAINAGE DIVERSION SYSTEM

CIVIL DETAILS

REGISTERED PROFESSIONAL ENGINEER SEAN R. RAGSDALE C 64314 EXP. 06/30/09 CIVIL STATE OF CALIFORNIA

PE Stamp

Des: SRR, VHS, MD, KO	09-12-07	Scale:
Dwn: VHS	09-13-07	PFNID: 300-2007-001
Chk: SRR	09-12-07	S/W: AUTOCAD 2006
Dwg. No. PLZ2007-0300-0006D		Sht. No. C-5 6 of 12

FILE NAME: P:\Projects\07\03398-07-001 Cerrudo LLNL\CAD\3-FINAL SUBMITTAL09-18-07\C-5.dwg DATE PLOTTED: September 18, 2007 - 4:19 PM

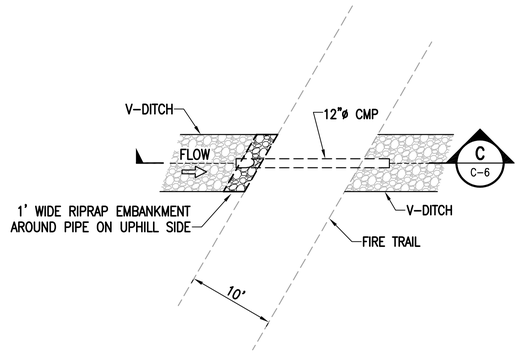

1 C-1 FIRE TRAIL CROSSING
NOT TO SCALE

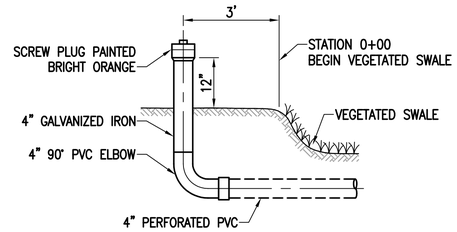

2 C-2 EASTSIDE VEGETATED SWALE CLEANOUT DETAIL
C-4
NOT TO SCALE

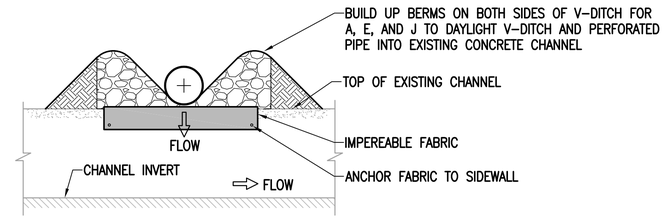

A C-5 SECTION
NOT TO SCALE

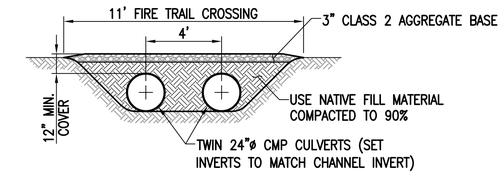

B C-5 CHANNEL CROSSING
NOT TO SCALE

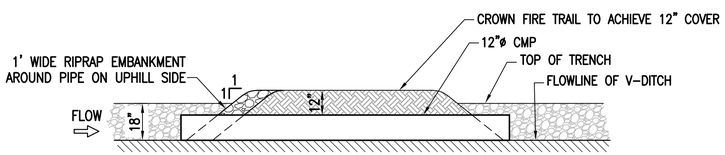

C C-6 SECTION
NOT TO SCALE

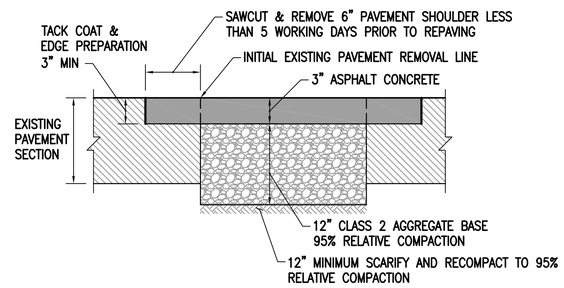

3 C-5 AC ROAD PATCH DETAIL
NOT TO SCALE

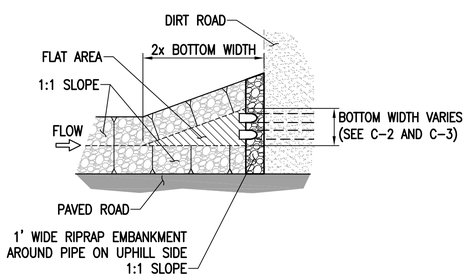

4 C-2 FIRE TRIAL CROSSING – TRANSITION DETAIL
C-3
NOT TO SCALE

TABLE 1

TRENCH SEGMENT	TYPE	PIPE DIAMETER (IN.)	TRENCH WIDTH (IN.)
PERFORATED PIPE			
B	V-DITCH		
	PIPE	8	18
C	V-DITCH		
	PIPE	6	18
F	V-DITCH		
	PIPE	12	24
G	V-DITCH		
	PIPE	8	18
H	V-DITCH		
	PIPE	12	24
I	V-DITCH		
	PIPE	12	24
K	V-DITCH		
	PIPE	12	24
L	V-DITCH		
	PIPE	8	18
NON-PERFORATED PIPE			
A	V-DITCH		18
	PIPE	6	
D	V-DITCH		24
	PIPE	12	
E	V-DITCH		30
	PIPE	18	
J (ABOVE I)	V-DITCH		18
	PIPE	8	
J (BELOW I)	V-DITCH		24
	PIPE	12	

NOTES:

1. CONTRACTOR SHALL ENSURE THAT MIN. GRAVEL SIZE IS GREATER THAN WIDTH OF PIPE PERFORATIONS.

REGISTERED PROFESSIONAL ENGINEER
SEAN R. RUSSELL
C 64314
EXP. 06/30/09
CIVIL
STATE OF CALIFORNIA
PE Stamp

No.	Date	Revision	Dwn	Chk	D/C	PM	CL
3	09/14/07	FINAL% SUBMITTAL	PS	SRR		SRR	
2	08/16/07	100% SUBMITTAL	PS	SRR		SRR	
1	06/22/07	65% SUBMITTAL	VHS	SRR		SRR	

CERRUDO CS SERVICES
74 Digital Drive, No. 1
Novato, CA 94949
(415) 883-5017
(415) 883-5021(fax)

WINZLER&KELLY CONSULTING ENGINEERS
417 Montgomery Street, Suite 700, San Francisco, CA 94104-1115
tel 415.283.4970 ♦ fax 415.283.4980 ♦ www.w-and-k.com

Lawrence Livermore National Laboratory
Plant Engineering, Livermore, CA 94550

PIT 7 COMPLEX DRAINAGE
DIVERSION SYSTEM

CIVIL DETAILS

Des: SRR, VHS, MD, KO	09-12-07	Scale:
Dwn: VHS	09-13-07	PFNID: 300-2007-001
Chk: SRR	09-12-07	S/W: AUTOCAD 2006
Dwg. No. PLZ2007-0300-0007D		Sht. No. C-6 7 of 12

FILE NAME: P:\Projects\07\03398-07-001 Cerrudo LLNL\CAD\3-FINAL SUBMITTAL09-18-07\C-6.dwg DATE PLOTTED: September 18, 2007 – 4:19 PM

4 INCHES ON ORIGINAL

NOTES:

1. SEE SHEET S-3 FOR ADDITIONAL DIMENSIONS.
2. THE DEPTH INDICATOR MARKINGS SHALL BE LEVEL MARKS PAINTED ON BOTH BASIN SIDE WALLS AT 6" AND 12" INTERVALS ABOVE THE FINISH FLOOR SLAB OF THE SETTLING BASIN.

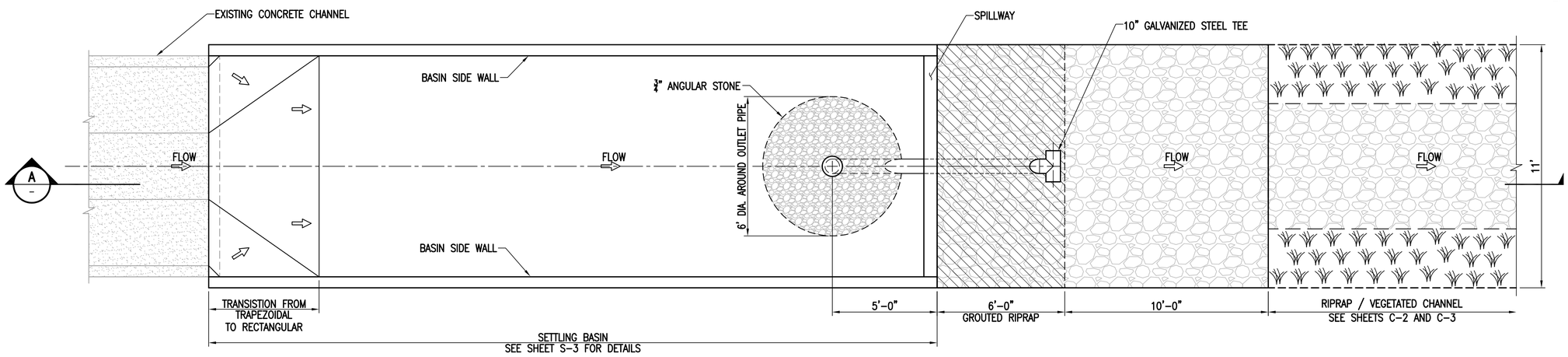

1 / C-3 PLAN – SETTLING BASIN
NOT TO SCALE

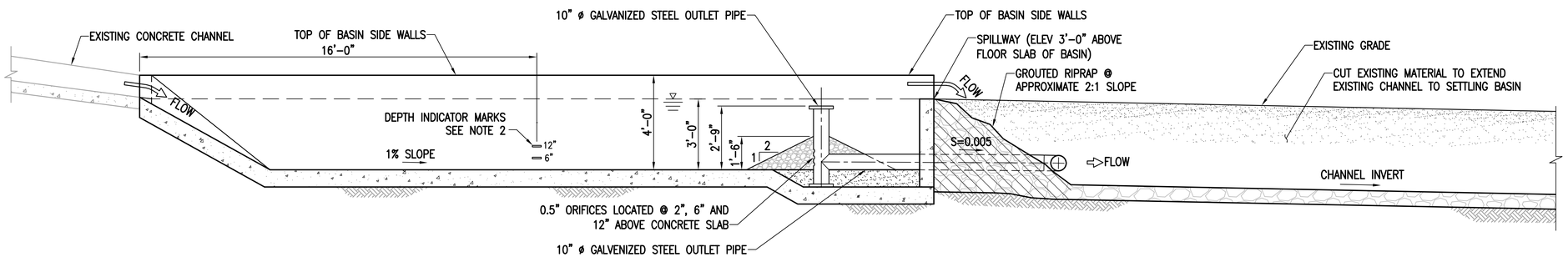

A / C-1 SECTION – SETTLING BASIN
NOT TO SCALE

No.	Date	Revision	Dwn	Chk	D/C	PM	CL
1	09/14/07	FINAL% SUBMITTAL	PS	SRR		SRR	
2	08/16/07	100% SUBMITTAL	PS	SRR		SRR	
3	06/22/07	65% SUBMITTAL	VHS	SRR		SRR	

CERRUDO CS SERVICES
74 Digital Drive, No. 1
Novato, CA 94949
(415) 883-5017
(415) 883-5021(fax)

WINZLER&KELLY CONSULTING ENGINEERS
417 Montgomery Street, Suite 700, San Francisco, CA 94104-1115
tel 415.283.4970 ♦ fax 415.283.4980 ♦ www.w-and-k.com

Lawrence Livermore National Laboratory
Plant Engineering, Livermore, CA 94550

PIT 7 COMPLEX DRAINAGE DIVERSION SYSTEM

CIVIL DETAILS

REGISTERED PROFESSIONAL ENGINEER SEAN R. RAGAN C 54314 EXP. 06/30/09 CIVIL STATE OF CALIFORNIA
PE Stamp

Des: SRR, VHS, MD, KO	09-12-07	Scale:	
Dwn: VHS	09-13-07	PFNID: 300-2007-001	
Chk: SRR	09-12-07	S/W: AUTOCAD 2006	
Dwg. No. PLZ2007-0300-0008D		Sht. No. C-7	8 of 12

FILE NAME: P:\Projects\07\03398-07-001 Cerrudo LLNL\CAD\3-FINAL SUBMITTAL09-18-07\C-7.dwg DATE PLOTTED: September 18, 2007 – 4:19 PM

4 INCHES ON ORIGINAL

LEGEND

- AGGREGATE BASE IN SECTION
- CONCRETE IN PLAN AND SECTION
- EARTH IN SECTION

ABBREVIATIONS

AB	ANCHOR BOLT
ABC	AGGREGATE BASE COURSE
ABV	ABOVE
ADD'L	ADDITIONAL
ALT	ALTERNATE
ARCH	ARCHITECT/ARCHETECTURAL
&	AND
@	AT
B	BOTTOM
B/	BOTTOM OF
BB	BOTTOM BARS
BLDG	BUILDING
BLKG	BLOCKING
BM	BEAM
BN	BOUNDARY NAIL
BRG	BEARING
BS	BOTH SIDES
BTWN	BETWEEN
C	CHANNEL
CANT	CANTILEVER
CAP	CAPACITY
CBC	CALIFORNIA BUILDING CODE
CJ	CONSTRUCTION JOINT
CL	CENTERLILNE
CLG	CEILING
CLR	CLEAR
CMU	CONCRETE MASONRY UNIT
COL	COLUMN
CONC	CONCRETE
CONN	CONNECTION
CONSTR	CONSTRUCTION
CONT	CONTINUOUS
COORD	COORDINATE
CTR/CTR'D	CENTER/CENTERED
d	PENNY (NAIL SIZE)
DBL	DOUBLE
DET	DETAIL
DF	DOUGLAS FIR
DIA	DIAMETER
DIAG	DIAGONAL
DM	DIMENSION
DL	DEAD LOAD
Do	DITTO
DP	DEEP
DWG	DRAWING
DWL	DOWEL
E	EXISTING
EA	EACH
EF	EACH FACE
ELEV	ELEVATION
ELEC	ELECTRICAL
EMBED	EMBEDMENT
EN	EDGE NAIL
EQ	EQUAL
EQUIP	EQUIPMENT
ETC	ET CETERA
EW	EACH WAY
EWEF	EACH WAY EACH FACE
EXIST	EXISTING
EXP	EXPOSED
EXP	EXPANSION BOLT
EXT	EXTERIOR
FF	FINISHED FLOOR
FG	FINISHED GRADE
FH	FULL HEIGHT
FIN	FINISH
FL	FLOOR
FLG	FLANGE
FN	FACE NAIL
FND	FOUNDATION
FO	FACE OF
FOM	FACE OF MASONRY
FOW	FACE OF WALL
FRMG	FRAMING
FS	FAR SIDE
FTG	FOOTING
GA	GAUGE
GALV	GALVANIZED
GRT	GROUT
GSN	GENERAL STRUCTURAL NOTES
GYP	GYPSUM
HAS	HEADED ANCHOR STUDS
HD	HAND
HEF	HORIZONTAL EACH FACE
HIF	HORIZONTAL INSIDE FACE
HK	HOOK
HM	HOLLOW METAL
HOF	HORIZONTAL OUTSIDE FACE
HORZ	HORIZONTAL
HP	HIGH POINT
HT	HEIGHT
ID	INSIDE DIAMETER
IE	FOR EXAMPLE
INFO	INFORMATION
INT	INTERIOR
INTERMED	INTERMEDIATE
INTERSECT	INTERSECTION
INV	INVERT
JST	JOIST
JT	JOINT
L	ANGLE
LG	LONG
LL	LIVE LOAD
LLH	LONG LEG HORIZONTAL
LLV	LONG LEG VERTICAL
LOC	LOCATION
LONGIT	LONGITUDINAL
LP	LOW POINT
LSL	LONG SLOTS
LT	LEFT
MACH	MACHINE
MAINT	MAINTENANCE
MAS	MASONRY
MAX	MAXIMUM
MB	MACHINE BOLT
MC	CHANNEL
MCJT	MASONRY CONTROL JOINT
MECH	MECHANICAL
MFR	MANUFACTURER
MIN	MINIMUM
MNTG	MOUNTING
MO	MASONRY OPENING
MOD	MODIFIED
MTL	METAL
N	NEW
NIC	NOT IN CONTRACT
NOM	NOMINAL
NS	NEAR SIDE
NTS	NOT TO SCALE
#	NUMBER
OD	OUTSIDE DIAMETER
OF	OUTSIDE FACE
OPG	OPENING
OPP	OPPOSITE
P/C	PRE-CAST
PEB	PRE ENGINEERED BUILDING
PL	PLATE
PLCS	PLACES
PLUMB	PLUMBING
PLYWD	PLYWOOD
PNL	PANEL
PREFAB	PREFABRICATED
PT	POINT, PRESSURE TREATED
PVMT	PAVEMENT
QTY	QUANTITY
R	RADIUS
REF	REFERENCE
REG	REGULAR
REINF	REINFORCING
REQD	REQUIRED
RF	ROOF
RM	ROOM
RT	RIGHT
SHT	SHEET
SIM	SIMILAR
SLP	SLOPE
SP	SOIL PRESSURE
SPC	SPACE/SPACES
SPC'G	SPACING
SPEC	SPECIFICATIONS
SQ	SQUARE
STD	STANDARD
STIFF	STIFFENER
STL	STEEL
STRUCT	STRUCTURAL
SYMM	SYMMETRICAL
T	TOP
T/	TOP OF
T & G	TOUNGE AND GROOVE
T & B	TOP AND BOTTOM
TB	TOP BAR
TECH	TECHNICAL
TG	TEMPERED GLASS
THD	THREAD
THK	THICK
TL	TOTAL LOAD
TOC	TOP OF CONCRETE
TOS	TOP OF STEEL
TRANS	TRANSVERSE
TS	TUBE STEEL
TYP	TYPICAL
UNO	UNLESS NOTED OTHERWISE
VEF	VERTICAL EACH FACE
VERT	VERTICAL
W/	WITH
W	WIDE FLANGE (BEAM)
W/O	WITHOUT
WP	WORK POINT
WS	WATERSTOP
WT	WEIGHT
WWF	WELDED WIRE FABRIC

GENERAL STRUCTURAL NOTES

GENERAL

1. CONTRACTOR TO COORDINATE ALL STRUCTURAL DOCUMENTS WITH ALL OTHER DISCIPLINES AND REPORT ANY DISCREPANCIES TO THE ENGINEER PRIOR TO THE START OF ANY FABRICATION OR CONSTRUCTION.
2. UNLESS NOTED OTHERWISE, REFER TO DRAWINGS OTHER THAN STRUCTURAL FOR FINISHES, SLOPES, DEPRESSIONS, OPENINGS, CURBS, STAIRS, RAMPS, TRENCHES, EQUIPMENT AND LOCATIONS AND EXTENT OF SUCH CONDITIONS.
3. CONTRACTOR TO COORDINATE ALL NEW WORK WITH EXISTING SITE CONDITIONS AND REPORT ANY DISCREPANCIES TO THE ENGINEER PRIOR TO CONSTRUCTION.
4. DETAILS OR CONDITIONS NOT FULLY DEVELOPED ON STRUCTURAL DOCUMENTS ARE SIMILAR TO DEVELOPED DETAILS.

CONCRETE

1. ALL CONCRETE SHALL BE NORMAL WEIGHT, WITH A MINIMUM COMPRESSIVE STRENGTH OF 4000 PSI AT 28 DAYS.
2. CONCRETE REINFORCING COVER SHALL BE AS FOLLOWS, UNLESS NOTED OTHERWISE:

   CONCRETE CAST AGAINST AND PERMANENTLY EXPOSED TO EARTH.....3 INCHES

   CONCRETE EXP0SED TO EARTH OR WEATHER:
   NO. 6 OR LARGER BARS.....2 INCHES
   NO. 5 OR SMALLER BARS.....1.5 INCHES

   CONCRETE NOT EXPOSED TO EARTH OR IN CONTACT WITH GROUND:
   SLABS OR WALLS.....0.75 INCHES
3. ALL CONCRETE DIMENSIONS SHOWN ARE MINIMUM DIMENSIONS. CONTRACTOR TO REVIEW FORMING, REINFORCING DETAILS AND ANY EMBEDDED ITEMS AND DETERMINE PRIOR TO FABRICATION OF ANY REINFORCING, PLACEMENT REQUIREMENTS AND CLEARANCES.

REINFORCING

1. ALL CONCRETE REINFORCING SHALL BE ASTM A615, Fy = 60 KSI.
2. REINFORCING SHALL EXTEND CONTINUOUS FOR THE DIMENSION SHOWN.
3. NO WELDING OF ANY REINFORCING IS PERMITTED.
4. LOCATE ALL REINFORCING AS SHOWN ON DRAWINGS AND FASTEN SECURELY.
5. ALL REINFORCING TO TERMINATE WITH STANDARD HOOKS AS SHOWN ON PLANS.

REGISTERED PROFESSIONAL ENGINEER STEPHEN C. BOWMAN No. S4228 Exp. 6/30/08 STRUCTURAL STATE OF CALIFORNIA

PE Stamp

No.	Date	Revision	Dwn	Chk	D/C	PM	CL
3	09/14/07	FINAL% SUBMITTAL	PS	SRR		SRR	
2	08/16/07	100% SUBMITTAL	PS	SRR		SRR	
1	06/22/07	65% SUBMITTAL	VHS	SRR		SRR	

CERRUDO CS SERVICES
74 Digital Drive, No. 1
Novato, CA 94949
(415) 883-5017
(415) 883-5021(fax)

WINZLER & KELLY CONSULTING ENGINEERS
417 Montgomery Street, Suite 700, San Francisco, CA 94104-1115
tel 415.283.4970 ♦ fax 415.283.4980 ♦ www.w-and-k.com

Lawrence Livermore National Laboratory
Plant Engineering, Livermore, CA 94550

PIT 7 COMPLEX DRAINAGE DIVERSION SYSTEM

ABBREVIATIONS, LEGEND AND GENERAL STRUCTURAL NOTES

Des: CC	09-12-07	Scale:
Dwn: SEB	09-13-07	PFNID: 300-2007-001
Chk: SCB	09-14-07	S/W: AUTOCAD 2006
Dwg. No. PLZ2007-0300-0009D		Sht. No. S-1 9 of 12

FILE NAME: P:\Projects\07\03398-07-001 Cerrudo LLNL\CAD\3-FINAL SUBMITTAL09-18-07\Structural\0339807001S-1.dwg DATE PLOTTED: September 18, 2007 - 4:23 PM

4 INCHES ON ORIGINAL

DEVELOPMENT LENGTH (ℓ_d)												
BAR SIZE	3000 PSI CONC (f'c)				4000 PSI CONC (f'c)				5000 PSI CONC (f'c)			
	TOP		OTHER		TOP		OTHER		TOP		OTHER	
	s ≥ 6"	s < 6"	s ≥ 6"	s < 6"	s ≥ 6"	s < 6"	s ≥ 6"	s < 6"	s ≥ 6"	s < 6"	s ≥ 6"	s < 6"
#3	13	22	12	17	12	19	12	15	12	17	12	13
#4	18	29	14	22	15	25	12	19	14	23	12	17
#5	22	36	17	28	19	31	15	24	17	28	13	22
#6	26	43	20	33	23	37	18	29	20	34	16	26
#7	38	63	29	48	33	54	25	42	29	49	23	38
#8	43	72	33	55	37	62	29	48	34	56	26	43
#9	49	81	37	62	42	70	33	54	38	63	29	48
#10	56	89	43	69	49	78	38	60	44	69	34	54
#11	68	98	52	76	59	85	45	66	53	76	41	59
TENSION LAP SPLICE LENGTH (CLASS 'B' SPLICE)												
BAR SIZE	3000 PSI CONC (f'c)				4000 PSI CONC (f'c)				5000 PSI CONC (f'c)			
	TOP		OTHER		TOP		OTHER		TOP		OTHER	
	s ≥ 6"	s < 6"	s ≥ 6"	s < 6"	s ≥ 6"	s < 6"	s ≥ 6"	s < 6"	s ≥ 6"	s < 6"	s ≥ 6"	s < 6"
#3	17	28	16	22	16	25	16	19	16	22	16	17
#4	23	38	18	29	20	33	16	25	18	29	16	23
#5	28	47	22	36	25	41	19	31	22	36	17	28
#6	34	56	26	43	29	49	23	38	26	44	20	34
#7	49	82	38	63	43	71	33	55	38	63	30	49
#8	56	93	43	72	49	81	38	62	44	72	34	56
#9	63	105	49	81	55	91	42	70	49	81	38	63
#10	73	116	56	90	63	101	49	78	57	90	44	70
#11	88	128	68	99	76	111	59	85	68	99	53	76

NOTES:

1. LENGTHS SHOWN ARE FOR GRADE 60 UNCOATED BARS
2. LENGTHS SHOWN ARE IN INCHES
3. INCREASE LENGTHS 30% FOR LIGHT WEIGHT CONCRETE
4. TOP BARS: HORIZONTAL BARS WITH MORE THAN 12" OF FRESH CONCRETE CAST BELOW THEM
5. THE QUANTITY 'S' IS DEFINED AS FOLLOWS:

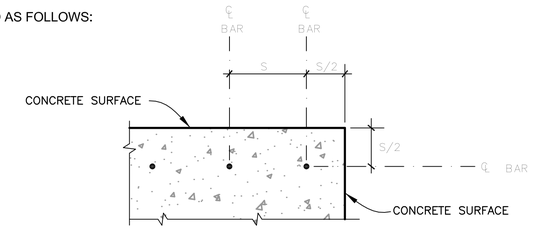

G1 VAR **BAR DEVELOPMENT LENGTHS AND LAP SPLICE LENGTHS**
SCALE: NOT TO SCALE

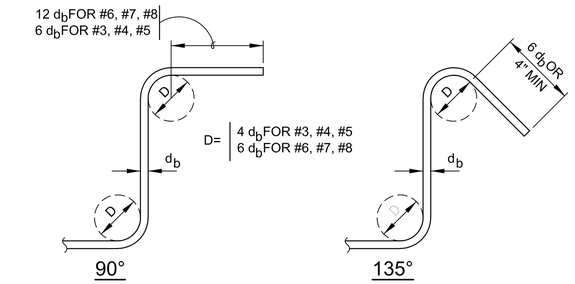

J13 VAR **STIRRUP AND TIE HOOKS**
SCALE: NOT TO SCALE

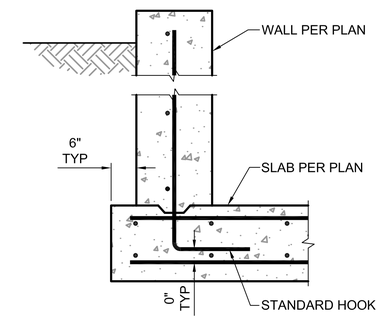

G13 VAR **WALL BASE CONSTRUCTION JOINT**
SCALE: NOT TO SCALE

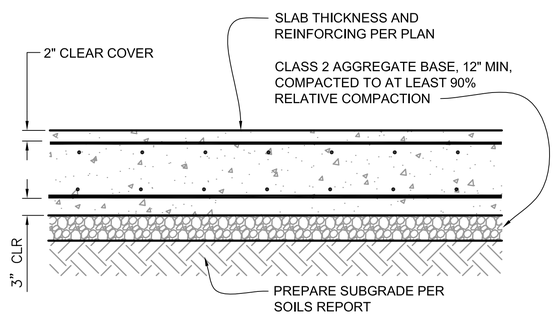

D1 VAR **SLAB ON GRADE**
SCALE: NOT TO SCALE

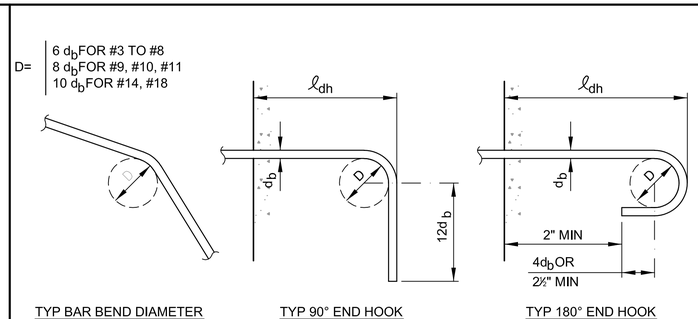

MINIMUM TENSION EMBEDMENT LENGTHS ℓ_{dh} (IN.) FOR STANDARD END HOOKS ON REINFORCING BARS				
BAR SIZE	NORMAL WEIGHT CONCRETE, f'c , PSI			
	3000	4000	5000	6000
#3	6	6	6	6
#4	8	7	6	6
#5	10	9	8	7
#6	12	10	9	9
#7	14	12	11	10
#8	16	14	12	11
#9	18	15	14	13
#10	20	17	16	14
#11	22	19	17	16
#14	38	33	29	27
#18	50	43	39	35

D5 VAR **REINF BAR BENDS & END HOOKS**
SCALE: NOT TO SCALE

NOTE: VERTICAL BARS SHOWN AT HOOKS ONLY

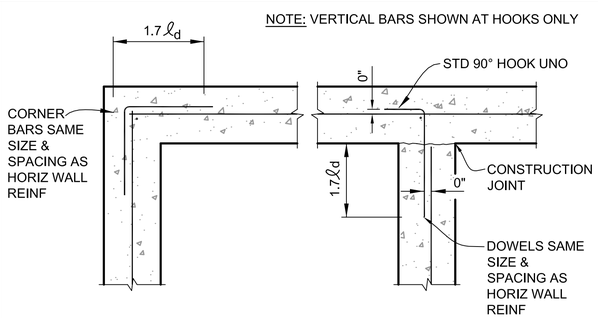

A1 VAR **CORNER & INTERSECTION OF CONCRETE WALL**
SCALE: NOT TO SCALE

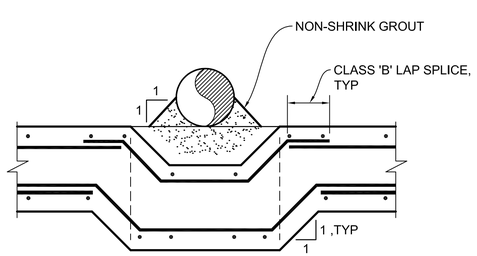

B1 S-3 **WALL PENETRATION REINF**
SCALE: NOT TO SCALE

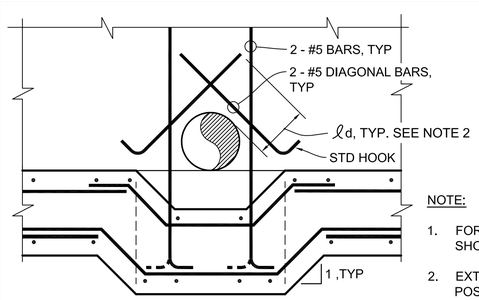

NOTE:

1. FOR INFORMATION NOT SHOWN SEE DETAIL B2/S-2.
2. EXTEND AS FAR AS POSSIBLE OR END IN STD HOOK.

B2 S-3 **TROUGH DETAIL AT OUTLET PIPE**
SCALE: NOT TO SCALE

PE Stamp

No.	Date	Revision	Dwn	Chk	D/C	PM	CL
3	09/14/07	FINAL% SUBMITTAL	PS	SRR		SRR	
2	08/16/07	100% SUBMITTAL	PS	SRR		SRR	
1	06/22/07	65% SUBMITTAL	VHS	SRR		SRR	

CERRUDO CS SERVICES
74 Digital Drive, No. 1
Novato, CA 94949
(415) 883-5017
(415) 883-5021(fax)

WINZLER&KELLY CONSULTING ENGINEERS
417 Montgomery Street, Suite 700, San Francisco, CA 94104-1115
tel 415.283.4970 ♦ fax 415.283.4980 ♦ www.w-and-k.com

Lawrence Livermore National Laboratory
Plant Engineering, Livermore, CA 94550

PIT 7 COMPLEX DRAINAGE DIVERSION SYSTEM

TYPICAL STRUCTURAL DETAILS

Des: CC	09–12–07	Scale:
Dwn: SEB	09–13–07	PFNID: 300–2007–001
Chk: SCB	09–14–07	S/W: AUTOCAD 2006
Dwg. No. PLZ2007-0300-0010D		Sht. No. S-2 10 of 12

FILE NAME: P:\Projects\07\03398-07-001 Cerrudo LLNL\CAD\3-FINAL SUBMITTAL09-18-07\Structural\03398070015-2.dwg DATE PLOTTED: September 18, 2007 – 4:23 PM

4 INCHES ON ORIGINAL

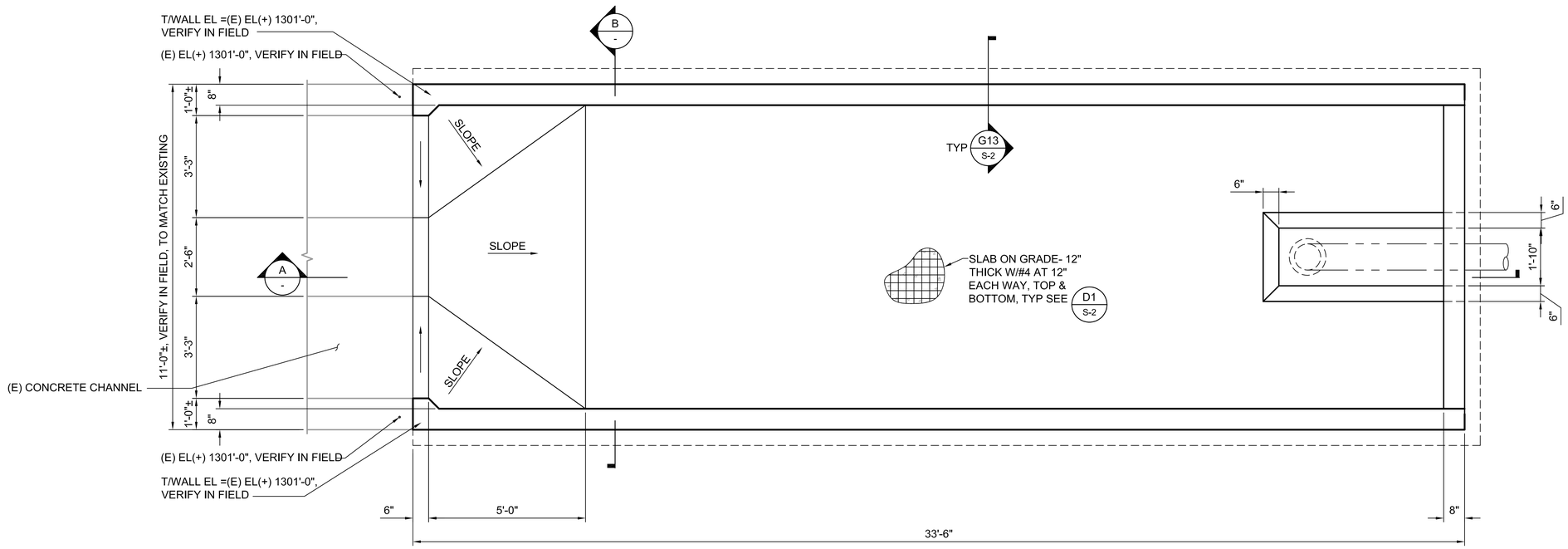

SETTLING BASIN PLAN

SCALE: 1/2"=1'-0"

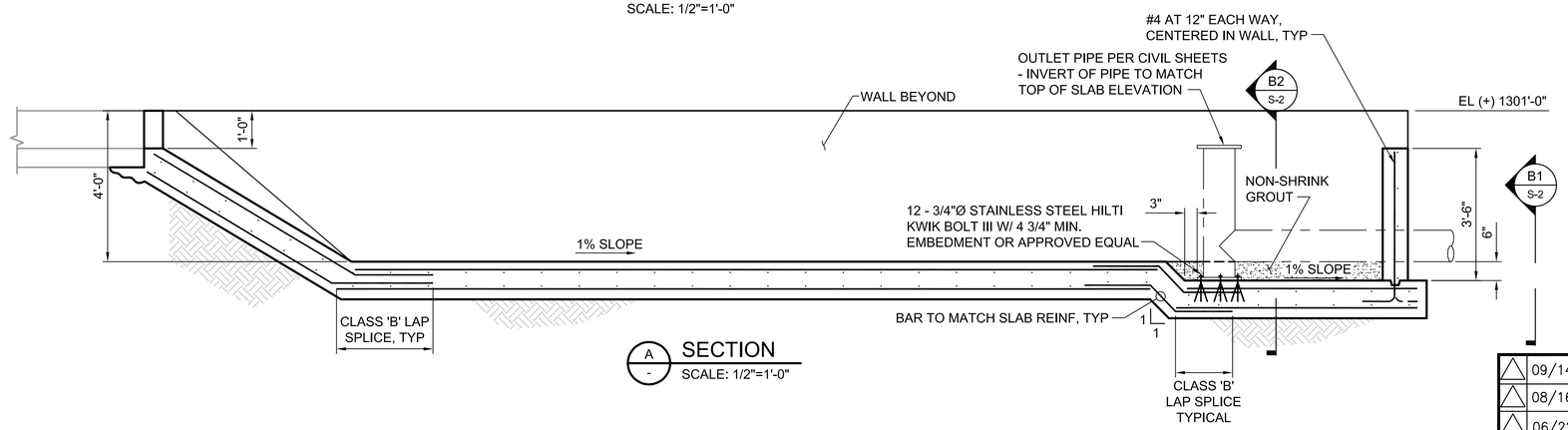

A - SECTION

SCALE: 1/2"=1'-0"

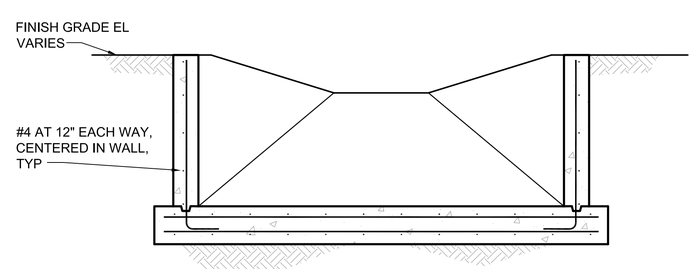

B - SECTION

SCALE: 1/2"=1'-0"

No.	Date	Revision	Dwn	Chk	D/C	PM	CL
3	09/14/07	FINAL% SUBMITTAL	PS	SRR		SRR	
2	08/16/07	100% SUBMITTAL	PS	SRR		SRR	
1	06/22/07	65% SUBMITTAL	VHS	SRR		SRR	

CERRUDO CS SERVICES
74 Digital Drive, No. 1
Novato, CA 94949
(415) 883-5017
(415) 883-5021(fax)

WINZLER & KELLY CONSULTING ENGINEERS
417 Montgomery Street, Suite 700, San Francisco, CA 94104-1115
tel 415.283.4970 ♦ fax 415.283.4980 ♦ www.w-and-k.com

Lawrence Livermore National Laboratory
Plant Engineering, Livermore, CA 94550

PIT 7 COMPLEX DRAINAGE DIVERSION SYSTEM

SETTLING BASIN PLAN AND SECTIONS

Des: CC	09-12-07	Scale:
Dwn: SEB	09-13-07	PFNID: 300-2007-001
Chk: SCB	09-14-07	S/W: AUTOCAD 2006

Dwg. No. PLZ2007-0300-0011D

Sht. No. S-3 11 of 12

REGISTERED PROFESSIONAL ENGINEER STEPHEN C. BURNS No. S4223 Exp. 6/30/08 STRUCTURAL STATE OF CALIFORNIA

PE Stamp

FILE NAME: P:\Projects\07\03398-07-001 Cerrudo LLNL\CAD\3-FINAL SUBMITTAL09-18-07\Structural\0339807001S-3.dwg DATE PLOTTED: September 18, 2007 - 4:23 PM

4 INCHES ON ORIGINAL

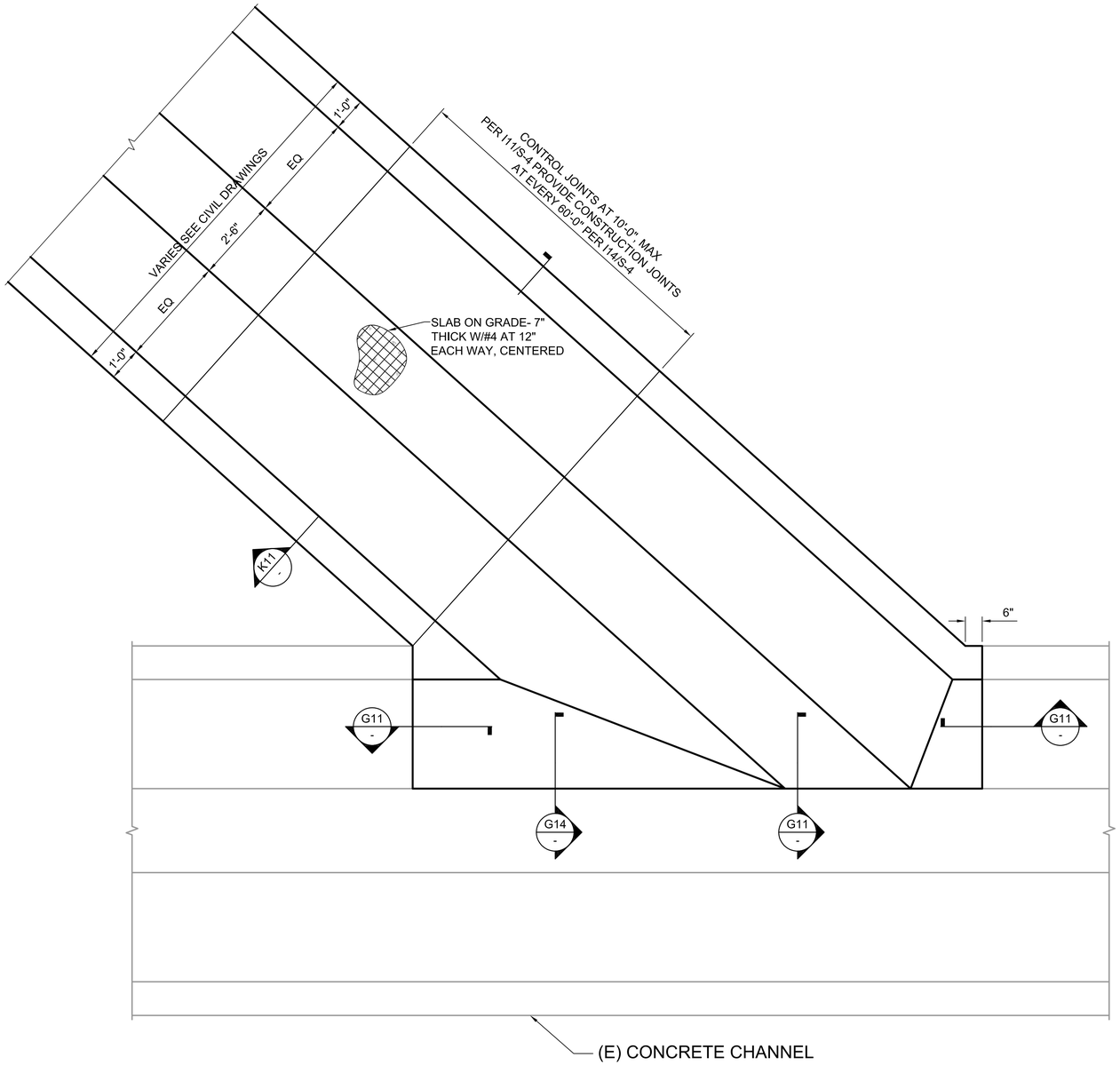

INLET CHANNEL PLAN

SCALE: 1/2"=1'-0"

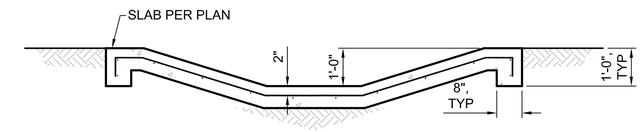

K11 - CHANNEL SECTION

SCALE: 1/2"=1'-0"

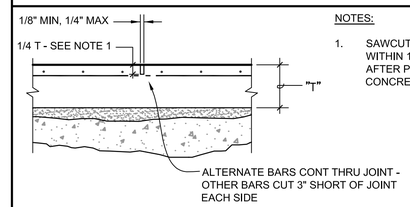

NOTES:

1. SAWCUT JOINTS WITHIN 12 HOURS AFTER PLACING CONCRETE

I11 - CONTROL JOINT

SCALE: NOT TO SCALE

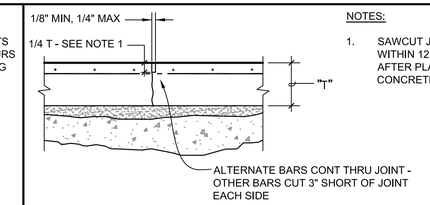

NOTES:

1. SAWCUT JOINTS WITHIN 12 HOURS AFTER PLACING CONCRETE

I14 - CONSTRUCTION JOINT

SCALE: NOT TO SCALE

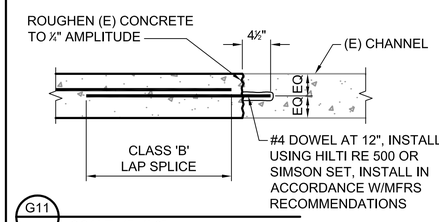

G11 -

SCALE: 1"=1'-0"

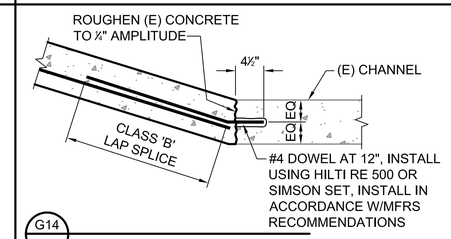

G14 -

SCALE: 1"=1'-0"

No.	Date	Revision	Dwn	Chk	D/C	PM	CL
3	09/14/07	FINAL% SUBMITTAL	PS	SRR		SRR	
2	08/16/07	100% SUBMITTAL	PS	SRR		SRR	
1	06/22/07	65% SUBMITTAL	VHS	SRR		SRR	

CERRUDO CS SERVICES
74 Digital Drive, No. 1
Novato, CA 94949
(415) 883-5017
(415) 883-5021(fax)

WINZLER & KELLY
CONSULTING ENGINEERS
417 Montgomery Street, Suite 700, San Francisco, CA 94104-1115
tel 415.283.4970 ♦ fax 415.283.4980 ♦ www.w-and-k.com

Lawrence Livermore National Laboratory
Plant Engineering, Livermore, CA 94550

PIT 7 COMPLEX DRAINAGE DIVERSION SYSTEM

INLET CHANNEL PLAN, SECTION, AND DETAILS

REGISTERED PROFESSIONAL ENGINEER STEPHEN C. BURNETT No. S4225 Exp. 6/30/08 STRUCTURAL STATE OF CALIFORNIA

PE Stamp

Des: CC	09-12-07	Scale:	
Dwn: SEB	09-13-07	PFNID: 300-2007-001	
Chk: SCB	09-14-07	S/W: AUTOCAD 2006	
Dwg. No. PLZ2007-0300-0012D		Sht. No. S-4	12 of 12

FILE NAME: P:\Projects\07\03398-07-001 Cerrudo LLNL\CAD\3-FINAL SUBMITTAL09-18-07\Structural\03398070001S-4.dwg DATE PLOTTED: September 18, 2007 - 4:23 PM

Section H-2.

San Joaquin County Hydrology Manual
Intensity-Duration-Frequency
Tables B-10 through B-13

TABLE B.10

10-YEAR INTENSITY-DURATION-FREQUENCY FOR COUNTY OF SAN JOAQUIN

10-year INTENSITY-DURATION-FREQUENCY

K = -0.180

Skew = 1.1

Cv = 0.354

MAP	5-min	10-min	15-min	30-min	1-hr	2-hr	3-hr	6-hr	12-hr	24-hr
9	2.33	1.54	1.21	0.80	0.53	0.35	0.27	0.18	0.12	0.08
10	2.45	1.62	1.27	0.84	0.55	0.36	0.29	0.19	0.12	0.08
11	2.57	1.70	1.33	0.88	0.59	0.38	0.30	0.20	0.13	0.09
12	2.70	1.78	1.40	0.92	0.61	0.40	0.31	0.21	0.14	0.09
13	2.82	1.86	1.46	0.96	0.64	0.42	0.33	0.22	0.14	0.09
14	2.94	1.94	1.52	1.01	0.66	0.44	0.34	0.23	0.15	0.10
15	3.07	2.02	1.59	1.05	0.69	0.46	0.36	0.24	0.16	0.10
16	3.19	2.11	1.65	1.09	0.72	0.47	0.37	0.25	0.16	0.11
17	3.31	2.19	1.71	1.13	0.75	0.49	0.39	0.26	0.17	0.11
18	3.44	2.27	1.78	1.17	0.77	0.51	0.40	0.26	0.17	0.12
19	3.56	2.35	1.84	1.22	0.80	0.53	0.42	0.27	0.18	0.12

TABLE B.11

25-YEAR INTENSITY-DURATION-FREQUENCY FOR COUNTY OF SAN JOAQUIN

25-year INTENSITY-DURATION-FREQUENCY

K = 0.745

Skew = 1.1

Cv = 0.354

MEAN ANNUAL PRECIP. (IN)

MAP	5-min	10-min	15-min	30-min	1-hr	2-hr	3-hr	6-hr	12-hr	24-hr
9	2.73	1.80	1.42	0.93	0.62	0.41	0.32	0.21	0.14	0.09
10	2.88	1.90	1.49	0.98	0.65	0.43	0.34	0.22	0.15	0.10
11	3.02	2.00	1.56	1.03	0.68	0.45	0.35	0.23	0.15	0.10
12	3.17	2.09	1.64	1.08	0.71	0.47	0.37	0.24	0.16	0.11
13	3.31	2.19	1.71	1.13	0.75	0.49	0.39	0.26	0.17	0.11
14	3.46	2.28	1.79	1.18	0.78	0.51	0.40	0.27	0.18	0.12
15	3.60	2.38	1.86	1.23	0.81	0.54	0.42	0.28	0.18	0.12
16	3.74	2.47	1.94	1.28	0.84	0.56	0.44	0.29	0.19	0.13
17	3.89	2.57	2.01	1.33	0.88	0.58	0.45	0.30	0.20	0.13
18	4.03	2.66	2.09	1.38	0.91	0.60	0.47	0.31	0.21	0.14
19	4.18	2.76	2.16	1.43	0.94	0.62	0.49	0.32	0.21	0.14

TABLE B.12

50-YEAR INTENSITY-DURATION-FREQUENCY FOR COUNTY OF SAN JOAQUIN

50-year INTENSITY-DURATION-FREQUENCY

K = 2.420

Skew = 1.1

Cv = 0.354

MAP	5-min	10-min	15-min	30-min	1-hr	2-hr	3-hr	6-hr	12-hr	24-hr
9	2.93	1.93	1.52	1.00	0.66	0.44	0.34	0.23	0.15	0.10
10	3.09	2.04	1.60	1.05	0.70	0.46	0.36	0.24	0.16	0.10
11	3.24	2.14	1.68	1.11	0.73	0.48	0.38	0.25	0.16	0.11
12	3.40	2.24	1.76	1.16	0.77	0.51	0.40	0.26	0.17	0.11
13	3.55	2.34	1.84	1.21	0.80	0.53	0.41	0.27	0.18	0.12
14	3.71	2.45	1.92	1.27	0.84	0.55	0.43	0.29	0.19	0.12
15	3.86	2.55	2.00	1.32	0.87	0.57	0.45	0.30	0.20	0.13
16	4.02	2.65	2.08	1.37	0.91	0.60	0.47	0.31	0.20	0.13
17	4.17	2.75	2.16	1.42	0.94	0.62	0.49	0.32	0.21	0.14
18	4.33	2.86	2.24	1.48	0.98	0.64	0.50	0.33	0.22	0.15
19	4.48	2.96	2.32	1.53	1.01	0.67	0.52	0.35	0.23	0.15

TABLE B.13

100-YEAR INTENSITY-DURATION-FREQUENCY FOR COUNTY OF SAN JOAQUIN

100-year INTENSITY-DURATION-FREQUENCY

K = 3.087

Skew = 1.1

Cv = 0.354

MAP	5-min	10-min	15-min	30-min	1-hr	2-hr	3-hr	6-hr	12-hr	24-hr
9	3.30	2.18	1.71	1.13	0.75	0.49	0.39	0.25	0.17	0.11
10	3.48	2.30	1.80	1.19	0.78	0.52	0.41	0.27	0.18	0.12
11	3.65	2.41	1.89	1.25	0.82	0.54	0.43	0.28	0.19	0.12
12	3.83	2.53	1.98	1.31	0.86	0.57	0.45	0.29	0.19	0.13
13	4.00	2.64	2.07	1.37	0.90	0.60	0.47	0.31	0.20	0.13
14	4.18	2.76	2.16	1.43	0.94	0.62	0.49	0.32	0.21	0.14
15	4.35	2.87	2.25	1.49	0.98	0.65	0.51	0.34	0.22	0.15
16	4.53	2.99	2.34	1.55	1.02	0.67	0.53	0.35	0.23	0.15
17	4.70	3.10	2.43	1.61	1.06	0.70	0.55	0.36	0.24	0.16
18	4.88	3.22	2.52	1.67	1.10	0.73	0.57	0.38	0.25	0.16
19	5.05	3.33	2.61	1.73	1.14	0.75	0.59	0.39	0.26	0.17

CALCULATIONS

PIT 7 COMPLEX DRAINAGE

DIVERSION SYSTEM

September 14, 2007

Submitted by:

WINZLER & KELLY
CONSULTING ENGINEERS
417 Montgomery St. Suite 700
San Francisco, CA 94104
(415) 283-4970

To:

UNIVERSITY OF CALIFORNIA

LAWRENCE LIVERMORE NATIONAL LABORATORY

Livermore, California 94550

TABLE OF CONTENTS

1. SETTLING BASIN OUTLET ANALYSIS

2. HYDROLOGY

3. HYDROGEOLOGY

4. STRUCTURAL

1. SETTLING BASIN OUTLET ANALYSIS

WINZLER & KELLY
CONSULTING ENGINEERS
417 Montgomery St., Suite 600
San Francisco, CA 94104-1115
(415) 283-4970

By RW Date 8/9/07 Client LLNL Sheet No. 1 of

Subject Settling Basin Outlet Analysis Job No.

Designer: Raymond Wong
Checker: Sean Rose
Date: 8/9/07.

§ ⇒ Orifice Equation:

$$Q = C_d A_o \sqrt{2gh}$$

⇒ change of volume over time:

$$\frac{dV}{dt} = \frac{dh}{dt} \cdot A_B = C_d A_o \sqrt{2gh}$$

$$\frac{dh}{\sqrt{h}} = \frac{C_d A_o \sqrt{2g}}{A_B} dt$$

$$\int_0^{h_B} \frac{1}{\sqrt{h}} dh = \int_0^{t_B} \frac{C_d A_o \sqrt{2g}}{A_B} dt$$

$$2h^{1/2} \Big|_0^{h_B} = \frac{C_d A_o \sqrt{2g}}{A_B} t \Big|_0^{t_B}$$

$$2 h_B^{1/2} = \frac{C_d A_o \sqrt{2g}\, t_B}{A_B}$$

$$A_o = \frac{A_B 2 \sqrt{h_B}}{C_d \sqrt{2g}\, t_B}$$

$$\therefore \quad A_o = \frac{A_B \sqrt{2h_B}}{C_d\, t_B \sqrt{g}}$$

where A_B = basin surface area (ft^2) = 330 ft^2
h_B = basin height (ft) = 3 ft
C_d = orifice coefficient = 0.6
A_o = orifice area (ft)
t_B = detention time / drawdown time. (s)
g = gravity = 32.2. (ft/s^2)

WINZLER & KELLY
CONSULTING ENGINEERS
417 Montgomery St., Suite 600
San Francisco, CA 94104-1115
(415) 283-4970

By rw Date 8/9/07 Client LCNL Sheet No. 2 of

Subject Settling Basin Outlet Analysis Job No.

Designer: Raymond Wong
Checker: Sean Rose
Date: 8/9/07

⇒ for 24 hours drawdown:

$t_B = 24 \cdot 60 \cdot 60 = 86{,}400\ s$

$\therefore A_o = \frac{330\sqrt{2(3)}}{0.6(86{,}400)\sqrt{32.2}} = 2.75\times10^{-3}\ ft^2$

$\therefore$ orifice $\phi = \sqrt{2.75\times10^{-3}/\pi} \times 2 = 0.059\ ft = 0.71$ inches.

⇒ if orifice $\phi = 0.5$ inches

$A_o = \pi\left(\frac{0.5}{2(12)}\right)^2 = 1.364\times10^{-3}\ ft^2$

$\therefore t_B = \frac{330\sqrt{2(3)}}{0.6(1.364\times10^{-3})\sqrt{32.2}} = 174{,}059\ s = 48.35$ hours.

$\because$ drawdown time < 72 hours $\therefore$ o/c.

§ ⇒ outlet riser pipe:

it needs to be able to convey 1.02 cfs water quality Q.

⇒ Manning's Equation

$Q = \frac{1.49}{n} A R^{2/3} \sqrt{S}$

$R = D/4$ @ full pipe
$S = 0.005$ slope
$A = \pi\left(\frac{D}{2}\right)^2$
$n = 0.013$

$\therefore Q = \frac{1.49}{0.013} \frac{\pi}{4} D^2 \left(\frac{D}{4}\right)^{2/3} \sqrt{0.005}$

$Q = 2.53\ D^{8/3}$

WINZLER & KELLY
CONSULTING ENGINEERS
417 Montgomery St., Suite 600
San Francisco, CA 94104-1115
(415) 283-4970

By RW Date 9/14/07 Client LLNL Sheet No. 3 of

Subject Settling Basin Outlet Analysis Job No.

Designer: Raymond Wong
Checker: Sean Rose
Date: 9/14/07

with $Q = 1.02$ cfs

$D = (Q/2.53)^{3/8} = 0.72$ ft $= 8.6$ inches

∴ use 10" outlet pipe.

∴ Settling Basin Outlet Design.

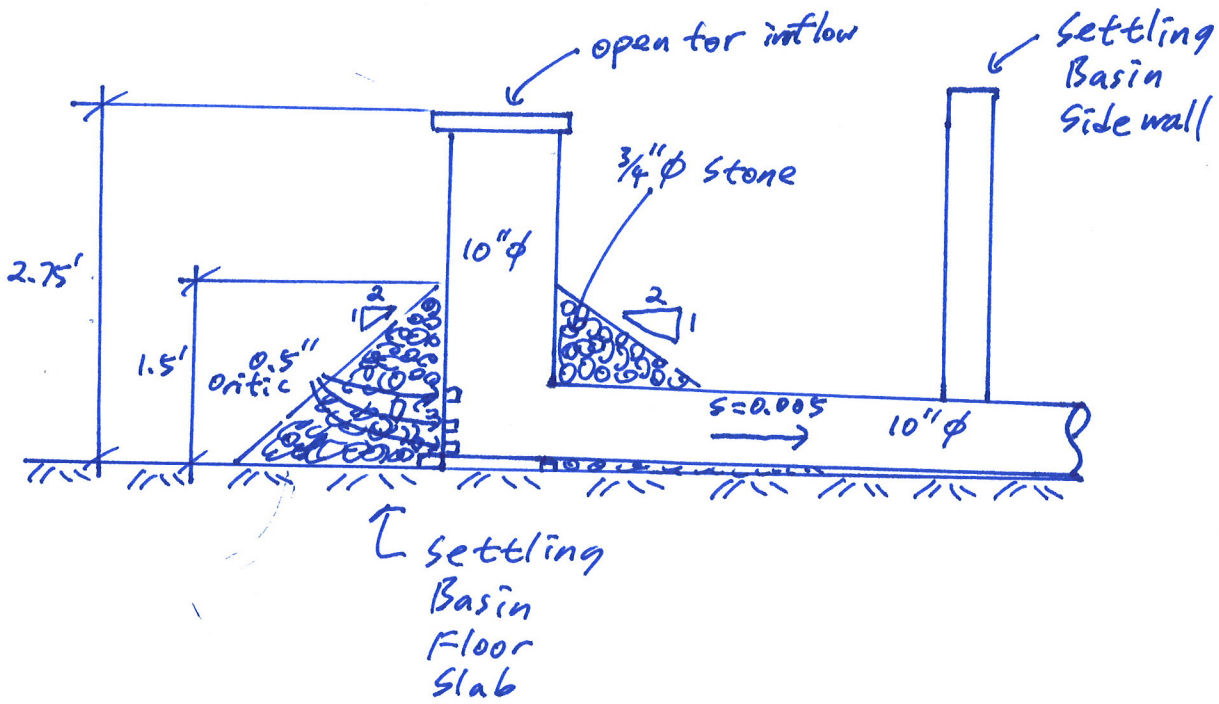

Note: The three 0.5" orifices will have the invert elevations at 2", 6", and 12" above floor slab of the settling basin.

Since there are three orifices instead of one, the drawdown time will be less than 48 hours.

2. HYDROLOGY CALCULATIONS

Lawrence Livermore National Laboratory
Site 300
Hydrologic and Hydraulic Calculations

Hydrology for road side channels and culverts
Peak 10-year runoff calculations

	steps 1,7		step 3			step 4	step 5		step 6		step 8			
											Eq D5	Eq D6		
shed	Area	Length	ΔZ	Slope	T_c'	i	F_m	S	I_a	Y	Q	Q_{min}	$Q_{selected}$	$Q_{cumulative}$
	(ac)	(ft)	(ft)	(ft/ft)	(min)	(in/hr)					(cfs)	(cfs)	(cfs)	(cfs)
A1	3.7	805	193	0.24	9.34	1.80	0.298	2.27	0.45	0.34	5.0	2.04	5.0	5.0
A2	10.1	1064	209	0.20	10.87	1.65	0.298	2.27	0.45	0.34	12.2	5.08	12.2	17.2
A3	4.3	995	170	0.17	10.88	1.64	0.298	2.27	0.45	0.34	5.2	2.16	5.2	22.4
A4a	7.6	1110	180	0.16	11.48	1.60	0.298	2.27	0.45	0.34	8.9	3.74	8.9	31.4
A4b	6.0	1018	164	0.16	11.11	1.62	0.298	2.27	0.45	0.34	7.1	2.97	7.1	38.5

shed	Area	Length	ΔZ	Slope	T_c'	i	F_m	S	I_a	Y	Q	Q_{min}	$Q_{selected}$	$Q_{cumulative}$
	(ac)	(ft)	(ft)	(ft/ft)	(min)	(in/hr)					(cfs)	(cfs)	(cfs)	(cfs)
A6	4.0	444	90	0.20	7.6	2.17	0.298	2.27	0.45	0.34	6.8	2.69	6.8	6.8
A7	10.1	1660	252	0.15	13.7	1.43	0.298	2.27	0.45	0.34	10.3	4.43	10.3	17.1

shed	Area	Length	ΔZ	Slope	T_c'	i	F_m	S	I_a	Y	Q	Q_{min}	$Q_{selected}$	$Q_{cumulative}$
	(ac)	(ft)	(ft)	(ft/ft)	(min)	(in/hr)					(cfs)	(cfs)	(cfs)	(cfs)
A10	3.4	842.0	170	0.20	9.8	1.79	0.298	2.27	0.45	0.34	4.5	1.85	4.5	60.1

Notes:

1. 10-year design storm per San Joaquin County Improvement Standards
2. Hydrology methodology per San Joaquin County Hydrology Manual
3. Refer to Figure 1 for Watershed Map.

constants:

K	0.48	coefficient used to determine Tc'
E	0.20	coefficient used to determine Tc'
F_p	0.35	area-averaged infiltration rate for tributary pervious area (Fig C-5)
a_i	0.15	ratio of impervious area to total
a_p	0.85	ratio of pervious area to total
CN	81.5	SCS curve number, used to determine F_p
P_{24}	2.17	inches, from table B.4

equations:

Tc' = K(L^3/ΔZ)^E

Fm = a_pF_p

S = (1000/CN)-10

I_a = 0.2S

Y = $(P_{24}-I_a)$^2/$(P_{24}-I_a+S)P_{24}$

Q = 0.9(i-Fm)A

Q_{min} = 0.9YiA

Designer: Maeve Daugharty
Checker: Rick Jorgenson
Date: 6/21/07

Hydraulics for road side channel and culverts

channel

Reach No.	L	Q_{10}	ΔZ	Upstream Invert Elevation	Downstream Invert Elevation	Slope	Bottom Width	H:V side slope	y_n	Velocity
	(ft)	(cfs)	(ft)	(ft)	(ft)	(ft/ft)	(ft)	(ft/ft)	(ft)	(fps)
1	98	5.0	7.3	1358.00	1350.75	0.074	0.0	1.0	1.0	5.0
2	451	17.2	16.7	1350.19	1333.50	0.037	0.0	1.0	1.8	5.3
3a	180	22.4	4.6	1332.60	1328.00	0.026	0.0	1.0	2.1	5.0
3b	299	22.4	16.0	1328.00	1312.00	0.054	0.0	1.0	1.9	6.5
4a	161	31.4	3.8	1309.80	1306.00	0.024	4.0	2.0	1.1	4.8
6	145	38.5	3.5	1303.80	1300.30	0.024	4.0	2.0	1.2	5.0
10	150	60.1	4.0	1298.00	1296.20	0.012	11.0	2.0	1.8	4.3

Notes:

1. Normal depth (y_n) assumed for channel sizing

constants:

Manning's n = 0.04

culverts

Culvert No.	L	Q_{10}	ΔZ	Upstream Invert Elevation	Downstream Invert Elevation	Slope	quantity	Size	HW	Outlet Velocity
	(ft)	(cfs)	(ft)	(ft)	(ft)	(ft/ft)		(in)	(ft)	(fps)
1	21	5.0	0.56	1350.75	1350.19	0.027	5.0	10.0	1.5	2.1
2	14	17.2	0.90	1333.50	1332.60	0.064	2.0	18.0	2.2	4.9
3	45	22.4	2.20	1312.00	1309.80	0.049	5.0	12.0	2.3	6.2
6	15	38.5	0.20	1304.00	1303.80	0.013	2.0	24.0	3.0	7.2

Designer: Maeve Daugharty
Checker: Rick Jorgenson
Date: 9/17/07

Hydrology for Settling Basin and Settling Basin Sizing

Average 10-year 6-hour runoff calculation

Settling Basin Sizing - Settling Volume

	steps 1,7	step 4	step 5		step 6		Eq D5	Eq D6	peak flow	average flow				
	Area	i	F_m	S	I_a	Y	Q	Q_{min}	$Q_{selected}$	Q_{design}	particle size	$V_{settling}$	Surface Area	Depth
shed	(ac)	(in/hr)					(cfs)	(cfs)	(cfs)	(cfs)	(mm)	(fps)	(sf)	(ft)
A1	3.69	0.21	0.2975	2.27	0.45	0.34	-0.29	0.24	0.24	0.08				
A2	10.1	0.21	0.2975	2.27	0.45	0.34	-0.79	0.65	0.65	0.22				
A3	4.30	0.21	0.2975	2.27	0.45	0.34	-0.34	0.28	0.28	0.10				
A4	13.6	0.21	0.2975	2.27	0.45	0.34	-1.07	0.88	0.88	0.30				
A7	10.1	0.21	0.2975	2.27	0.45	0.34	-0.80	0.65	0.65	0.22				
A6	4.0	0.21	0.2975	2.27	0.45	0.34	-0.32	0.26	0.26	0.09				
total	**45.8**								**2.95**	**1.02**	0.046	0.00550	222	2.0

Notes:

1. Hydrology calculation per San Joaquin County Hydrology Manual
2. Settling basin sizing per Erosion and Sedimentation Control Handbook, Goldman, Steven J., Jackson Katherine, Bursztynsky, Taras A.1986 McGraw-Hill, Inc.
3. 10-year average runoff is equal to the 2-year peak runoff.
4. 10-year average runoff is approximately equal to 10-year peak runoff divided by 2.9, per the Erosion and Sedimentation Control Handbook.
5. Soil distribution data provided by Lawrence Livermore National Laboratory.

constants:

K	0.48
E	0.20
F_p	0.35
a_i	0.15
a_p	0.85
CN	81.5
P_{24}	2.17

equations:

$Tc' = K(L^3/\Delta Z)^3$

$Fm = a_p F_p$

$S = (1000/CN)-10$

$I_a = 0.2S$

$Y = (P_{24}-I_a)^2/(P_{24}-I_a+S)P_{24}$

$Q = 0.9(I-Fm)A$

$Q_{min} = 0.9YIA$

Designer: Maeve Daugharty
Checker: Rick Jorgenson
Date: 6/21/07

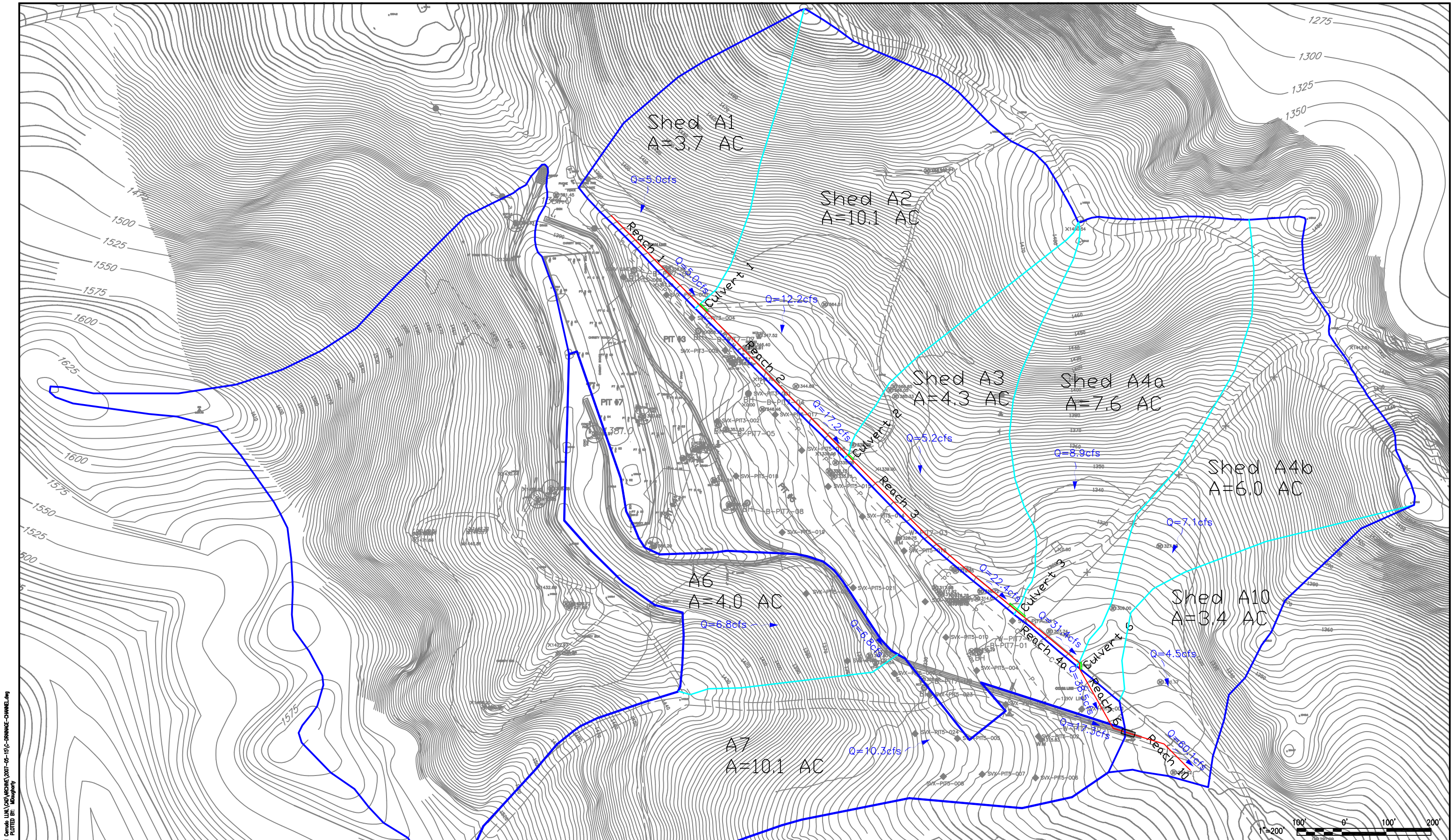

WINZLER&KELLY
CONSULTING ENGINEERS

LAWRENCE LIVER NATIONAL LABORATORY

PIT 7 COMPLEX DRAINAGE
DIVERSION SYSTEM

10-year Watershed Map

FIGURE
1

DRAWING NAME: g:\Projects\07\03380\07001 Canada LLNL\CAD\ARCHIVE\2007-05-15\C-DRAINAGE-CHANNEL.dwg
PLOT DATE: Aug 07, 2007 - 1:53pm PLOTTED BY: MDougherty

3. HYDROGEOLOGY CALCULATIONS

Estimate of the Performance of Pit 7 Complex Drainage Diversion System

The calculations on the following pages document W&K's rough estimation of the total effectiveness of the west and east side drainage diversion systems, expressed as the volume of water diverted by the system from the groundwater basin underlying Site 300 during an El Nino-type rain season. In order to assess effectiveness, both calculations compared the pre-project condition to the post-project condition. Note these are rough estimates only from hand calculations based on the data provided by LLNL. The analysis provided here required simplification of complex soil and water interactions. They do not have the advantage of more rigorous analysis using computer models and more extensive soil and groundwater data collection procedures.

West Side

The west side consists of drainage trenches design to carry water either by surface flow or subsurface through a network of drainage pipes to the north-flowing existing concrete channel. The uppermost trenches are designed to collect surface runoff from the predominantly bedrock surface above and the lower trenches are designed to collect both surface and subsurface runoff from the colluvial deposit between the upper and lower trenches. From the data provided by LLNL, it is our belief that the predominant colluvial flow is vertical thus reducing the collection efficiency of the subsurface component of the lower trenches. The calculations for the west side utilize estimates of permeability, evapotranspiration, etc. provided by LLNL.

East Side

The east side consists of a new lined surface water channel along the access road through the site. The east side drainage system is designed to collect surface water and divert it away from the valley before it infiltrates. The channel was sized for a 10-yr event based on San Joaquin County hydrology standards, which is roughly equivalent to that required for a 25-yr event using the rational method prescribed by the LLNL engineering guidelines per the design criteria in the RFP. Up to the channel capacity, any water that reaches the drainage channel is carried downstream out of the valley and is prevented from infiltrating. When the capacity is exceeded, it is expected that stormwater will overflow the channel and overland flow to the valley, where part of the overland flow will infiltrate to the ground. This is a significant improvement over the existing ditch which is assumed in our analysis to have approximately 2-year storm capacity.

Results

The following table documents the estimated effectiveness of the DDS in AF/yr diverted from infiltrating into the groundwater basin at Site 300 during a typical El Nino rain season:

	Pre-Project Groundwater Infiltration	Post-Project Groundwater Infiltration	Diverted from groundwater by DDS	% Effectiveness of DDS
West Side	4.0	2.5	1.5	38%
East Side	9.9	7.2	2.7	27%
Total	13.9	9.7	4.2	30%

Within the site, environmental, budget, and other constraints associated with this project W&K believes the drainage diversion system is effective at efficiently meeting the project's design criteria of reducing the volume of water infiltrating into the groundwater basin below the pit complex.

One of the other design criterion is preventing a rise in groundwater to an elevation greater than 10 feet below the bottom of the pits. This elevation is equivalent to the water elevation found during the 1992 drought season. W&K believes that a number of factors, most notably the predominance of vertical colluvial flow and the large relative size of the regional groundwater basin, make it questionable whether any system that does not prevent direct infiltration into the soil across the entire basin will succeed in preventing groundwater from rising above 1992 levels.

West Side

WINZLER & KELLY
CONSULTING ENGINEERS
495 Tesconi Circle • #9 Park Center
Santa Rosa, CA 95401
Telephone: (707) 523-1010 / FAX (707) 527-8679

(1)

By Ken O'Brien Date 8/16/07 Client LLNL Checked by Sean Rose Sheet No. 1 of 14

Subject LLNL Site 300 Storm runoff collection Job No. 03398.07001

This Page - Values and sources, copies of References in Attachment

1) High rain season Total rain fall = 18 inch or 1.5 FT ref (1)

2) A) Area of Colluvial deposit = 4 acre ref (2) + (3) C + L + G + I
B) Depth " " = 8 FT practical depth of construction
C) saturated " " = 4 FT Assumed
D) Width " " = 175 FT (ref (3))
E) Permeability " " Low 1.3 mm/hr or $3.6e^{-5}$ cm/sec or 0.8 gpd/ft² ref (4)
$K_{colluvium}$ Ave 15 mm/hr or $4.2e^{-4}$ cm/sec or 8.8 gpd/ft²
High 30 mm/hr or $8.3e^{-4}$ cm/sec or 17.6 gpd/ft²
F) Time of saturated horizontal drainage = 90 days
G) saturated zone gradients = 0.1 ft/ft horizontal,

3) A) Area of upslope = 6.8 acre ref (2) + (3) B + K + F + H
B) Permeability of Tnbs0 Low = 10^{-5} cm/sec or 2.1 gpd/ft² ref. (5) pg 9
High = 10^{-4} cm/sec or 21 gpd/ft²

4) Infiltration and run off ref (6)
A) infiltration rate = 25 mm/day or 1.0 mm/hr or $2.9e^{-5}$ cm/sec or 0.6 gpd/ft² or 0.04 in/hr
Low "D" soil
B) 1/2 of rainfall exceeding 25 mm/day intensity runs off
C) Infiltration to groundwater is 25% of rain after subtracting runoff and evapotranspiration ref (5) pg 11

5) Estimate of annual rain which is runoff - 25%

6) Gradient 0.1 ft/ft = Horz, Vert = 0.3 ft/ft conservative guess

WINZLER & KELLY
CONSULTING ENGINEERS
495 Tesconi Circle • #9 Park Center
Santa Rosa, CA 95401
Telephone: (707) 523-1010 / FAX (707) 527-8679

By Ken O'Brien Date 8/16/07 Client LLNL Checked by Sean Rose Sheet No. 2 of 14

Subject LLNL Site 300 storm runoff collection Job No. 03398.07.001

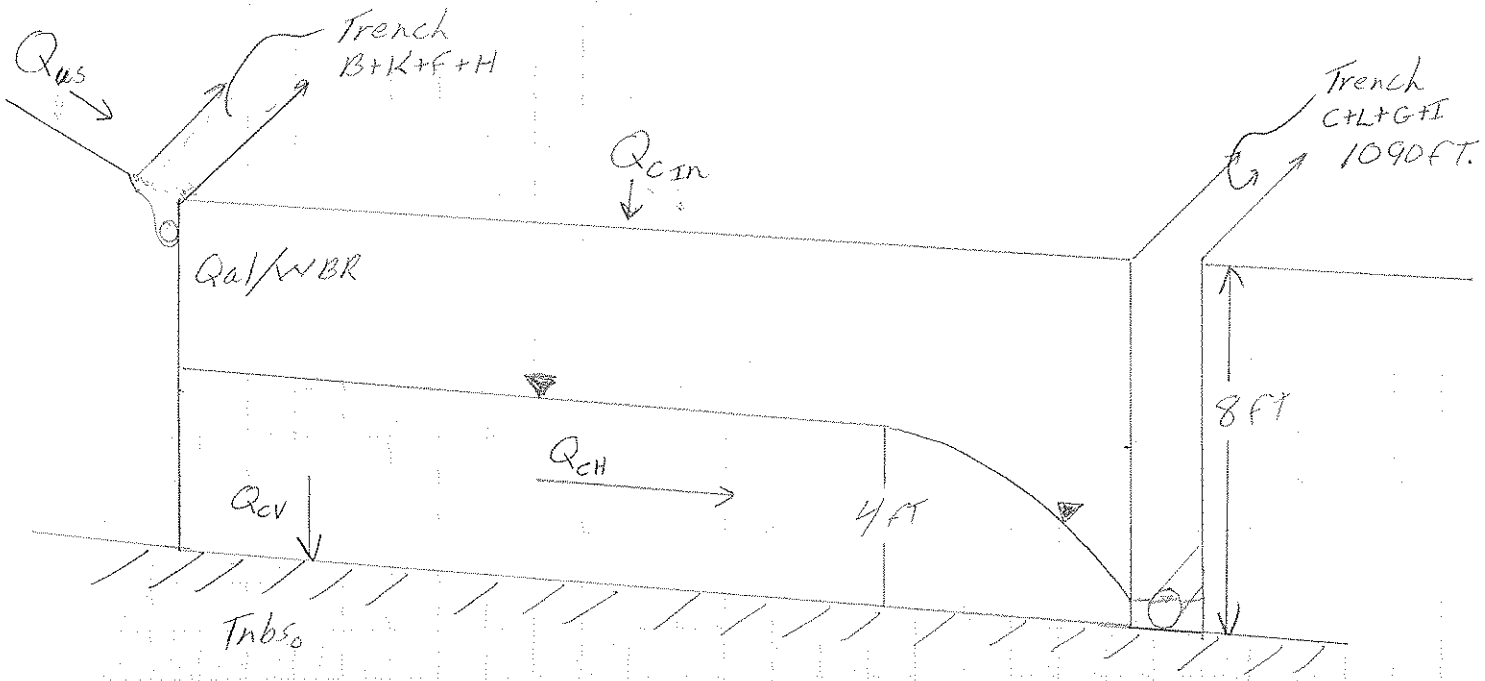

Step 1) Colluvial water without Trench B+K+F+H

$Q_{c\,IN}$ = (direct rain + Upper Slope runoff) × retention after evapotranspiration

$$Q_{c\,IN} = \left((4\,acre \times 1.5\,ft.) + (6.8\,acre \times 1.5\,ft \times \underbrace{0.25}_{\text{Proportion runoff}})\right) \times \underbrace{0.25}_{\text{retention after evapotranspiration}}$$

↑ assume no colluvial run off

assume all upperslope run off drains onto colluvium

$$Q_{c\,IN} = (6\,ac\text{-}ft + 2.55\,ac\text{-}ft) \times 0.25$$

$Q_{c\,IN}$ = 2.1 ac-ft remaining after evapotranspiration that must drain horizontally to Trench C+L+G+I or drain vertically through Tnbs0

Step 2) Colluvial water with Trench B+K+F+H

assume 80% capture by Trench B+K+F+H. 20% passes to Colluvium

$$Q_{c\,IN} = 6\,ac\text{-}ft + (2.55\,ac\text{-}ft \times 0.2) \times 0.25$$ (no runoff assumption)

$Q_{c\,IN}$ = 1.6 ac-ft into colluvium

WINZLER & KELLY
CONSULTING ENGINEERS
495 Tesconi Circle • #9 Park Center
Santa Rosa, CA 95401
Telephone: (707) 523-1010 / FAX (707) 527-8679

By Ken TOBrien Date 8/16/07 Client LLNL Checked by Sean Rose Sheet No. 3 of 14

Subject LLNL site 300 storm runoff collection Job No. 03398.07.001

Step 3) Estimate rate of drainage from colluvium

Step 3) $Q_{c\,in}$ = 1.6 ac-ft to leave colluvium
by A) horizontal flow and/or B) vertical flow
no runoff assumption

A) Q_{CH} - colluvial horizontal flow to trench C+L+G+I

$Q_{CH} = KAi$ where: K = permeability
A = cross sectional flow area
i = gradient

$= 8.8\,gpd/ft^2 \times (1090\,ft \times 4\,ft) \times 0.1\,ft/ft$

$= 3837\,gpd$

converting to ac-ft

$= 3837\,gpd \times \frac{1\,acre}{43{,}560\,ft^2} \times \frac{ft^3}{7.48\,gal}$

$= 0.01$ ac-ft/day - drain by trench

B) Q_{CV} - Colluvial vertical flow into T_{nbs_0}

$Q_{CV} = KAi$ where K of bedrock is limiting factor
low reported at 10^{-5} cm/sec or 2.1 gpd/ft²
gradient not known - guess at 0.3 ft/ft

$Q_{CV} = 2.1\,gpd/ft^2 \times (1090\,ft \times 175\,ft) \times 0.3\,ft/ft = 120{,}172\,gpd$

$Q_{CV} = 120{,}170\,gpd \times \frac{1\,acre}{43{,}560\,ft^2} \times \frac{ft^3}{7.48\,gal}$

$Q_{CV} = 0.37$ acre-ft/day - drain through T_{nbs_0}

WINZLER & KELLY
CONSULTING ENGINEERS
495 Tesconi Circle • #9 Park Center
Santa Rosa, CA 95401
Telephone: (707) 523-1010 / FAX (707) 527-8679

By Ken T O'Brien Date 8/16/07 Client LLNL Checked by Sean Rose Sheet No. 4 of 14

Subject LLNL site 300 storm water collection Job No. 03398.07.001

Step 4) Estimate improvement to West side drainage

Assumptions:

existing condition:

Upslope runs off and infiltrates completely in to colluvium. Once water enters colluvium it infiltrates completely to groundwater (after evapotranspiration)

Improvement:

Capture 80% of upslope runoff and divert out of water-shed. Provide opportunity for capture of horizontal subsurface flow within colluvium and colluvial runoff capture

A) Existing infiltration to groundwater from Colluvium

See Step 1 - 2.1 ac-ft drains to groundwater

B) Improvement

See Step 2 - 1.6 ac-ft - revise assumption to account for surface runoff of colluvium as soil type "D"

$Q_{runoff} = 6\,ac\text{-}ft + (2.55\,ac \times 0.2) \times 0.25$

direct rain; upslope runoff; proportional runoff

$Q_{runoff} = 1.63$ ac-ft capture by Trench C+L+G+I

WINZLER & KELLY
CONSULTING ENGINEERS
495 Tesconi Circle • #9 Park Center
Santa Rosa, CA 95401
Telephone: (707) 523-1010 / FAX (707) 527-8679

By Kent O'Brien Date 8/16/07 Client LLNL Checked by Sean Rose Sheet No. 5 of 14

Subject LLNL site 300 storm water collection Job No. 03398.07.001

$Q_{c_{IN}}$ (with runoff) = (direct rain + upslope runoff − Q_c runoff) × retainage after evapotranspiration

= (6 ac-ft + (2.55 × 0.2) − 1.63) × 0.25 ← retainage after evapotranspiration

Q_c

= 1.22 ac-ft in colluvium

Subtract colluvial water captured by horizontal drainage collection

Q_c (To groundwater) = colluvial infiltration − horizontal capture

Assume 60 days of colluvial saturation

= 1.22 ac-ft − (0.01 ac-ft/day × 60 days)

= 0.62 ac-ft

c) Summary

2.1 ac-ft groundwater infiltration w/o improvement
.62 ac-ft " " with improvement

* Improvement results in reduction by 60% with assumption that vertical flow is near zero

If vertical flow is significant (see Step 3B) then horizontal capture will be near zero and: 1.22 ac-ft of colluvial infiltration to groundwater.

* Improvement results in reduction by 40%

WINZLER & KELLY
CONSULTING ENGINEERS
495 Tesconi Circle • #9 Park Center
Santa Rosa, CA 95401
Telephone: (707) 523-1010 / FAX (707) 527-8679

By Ken Tobin Date 8/6/07 Client LLNL Checked by Sean Rose Sheet No. 6 of 14

Subject LLNL Site 300 Storm water collection Job No. 03398.07.001

* 2.04 ac-ft removed by Trench B+K+F+H

1.63 ac-ft removed by Trench C+L+G+I (surface)
0.6 max ac-ft removed by Trench C+L+G+I (subsurface)

Totals

10.8 ac watershed × 1.5 feet rain	=	16.2 ac-ft
removed by Trench B+K+F+H	=	2.04 ac-ft
removed by Trench C+L+G+I	=	1.63 ac-ft
		12.53 ac-ft

Existing	Improved
16.2 × 0.25	12.53 × 0.25
Infiltration to groundwater → 4.05 ac-ft	3.13 ac-ft
	− 0.6 subsurface recovery (max)
	→ 2.5 ac-ft

proportion remain after evapotranspiration

WINZLER & KELLY
CONSULTING ENGINEERS

495 Tesconi Circle • #9 Park Center
Santa Rosa, CA 95401
Telephone: (707) 523-1010 / FAX (707) 527-8679

Attachments
References from page 1

8 of 14 033980.0001

1

Site300 Precipitation Data

		Jul	Aug	Sep	Oct	Nov	Dec	Jan	Feb	Mar	Apr	May	Jun	TOTAL RAIN (inches)
1	1959 / 1960	0.04	0.14	1.75	0.00	0.00	0.49	1.81	2.77	0.35	0.59	0.23	0.00	8.17
2	1960 / 1961	0.35	0.00	0.00	0.00	2.81	0.49	1.75	0.65	1.81	0.54	0.20	0.00	8.60
3	1961 / 1962	0.00	0.05	0.30	0.05	1.60	0.62	0.68	4.35	1.40	0.06	0.04	0.00	9.15
4	1962 / 1963	0.00	0.00	0.00	0.91	0.25	1.54	1.09	2.58	1.44	1.89	0.34	0.00	10.04
5	1963 / 1964	0.00	0.00	0.13	0.98	1.86	0.15	2.60	0.04	0.79	0.25	0.32	0.56	7.68
6	1964 / 1965	0.00	0.21	0.07	1.60	2.37	2.52	1.95	0.43	0.92	1.99	0.02	0.00	12.08
7	1965 / 1966	0.03	0.37	0.00	0.02	3.00	1.94	0.61	0.82	0.21	0.12	0.14	0.07	7.33
8	1966 / 1967	0.21	0.00	0.00	0.00	1.83	1.88	4.11	0.20	2.80	2.44	0.06	0.28	13.81
9	1967 / 1968	0.00	0.00	0.00	0.06	0.67	1.61	2.46	2.50	1.60	0.26	0.16	0.00	9.32
10	1968 / 1969	0.00	1.45	0.00	0.38	1.68	1.45	3.59	3.71	0.91	0.60	0.00	0.00	13.77
11	1969 / 1970	0.00	0.00	0.09	0.79	0.62	1.02	4.04	0.54	1.37	0.35	0.00	0.00	8.82
12	1970 / 1971	0.00	0.00	0.00	0.37	4.66	3.82	0.95	0.30	1.36	1.41	0.91	0.00	13.78
13	1971 / 1972	0.00	0.00	0.11	0.10	0.42	1.78	0.54	0.52	0.04	0.45	0.05	0.02	4.03
14	1972 / 1973	0.00	0.00	0.40	1.02	3.79	1.39	4.33	3.50	1.81	0.14	0.00	0.00	16.38
15	1973 / 1974	0.00	0.00	0.01	1.70	1.79	3.75	1.55	0.44	1.80	1.26	0.00	0.47	12.77
16	1974 / 1975	0.11	0.00	0.00	0.83	0.73	1.98	0.59	2.61	3.49	1.23	0.00	0.00	11.57
17	1975 / 1976	0.04	0.95	0.07	0.60	0.11	0.17	0.14	0.99	0.34	0.36	0.00	0.05	3.82
18	1976 / 1977	0	0.72	1.22	0.77	0.71	0.31	0.5	0.42	0.58	0.15	2.78	0	8.16
19	1977 / 1978	0.06	0.00	0.10	0.31	0.44	2.07	3.08	1.96	2.69	0.83	0.08	0.00	11.62
20	1978 / 1979	0.00	0.00	0.04	0.00	1.06	0.22	3.07	1.70	1.80	0.42	0.04	0.00	8.35
21	1979 / 1980	0.13	0.00	0.00	0.65	0.66	2.05	2.27	3.14	1.16	0.55	0.00	0.00	10.61
22	1980 / 1981	0.51	0.00	0.00	0.84	0.08	0.81	2.62	0.89	2.07	0.00	0.00	0.00	7.82
23	1981 / 1982	0.00	0.00	0.00	0.84	2.67	1.28	2.23	1.32	3.20	1.44	0.00	0.69	13.67
24	1982 / 1983	0.04	0.00	1.96	1.23	3.69	1.49	5.43	2.79	5.25	1.61	0.15	0.00	23.64
25	1983 / 1984	0.00	1.02	0.43	0.37	3.73	2.80	0.40	1.39	0.42	0.27	0.01	0.00	10.84
26	1984 / 1985	0.00	0.00	0.00	1.34	2.60	1.25	0.77	0.64	1.88	0.38	0.01	0.18	9.05
27	1985 / 1986	0.00	0.00	0.10	0.68	1.88	1.32	0.79	3.72	3.13	0.92	0.04	0.00	12.58
28	1986 / 1987	0.02	0.00	0.31	0.00	0.04	0.78	1.25	2.66	1.03	0.11	0.00	0.00	6.20
29	1987 / 1988	0.00	0.00	0.00	1.32	0.52	1.80	1.75	0.26	0.08	0.71	0.47	0.15	7.06
30	1988 / 1989	0.00	0.00	0.00	0.07	0.82	1.49	0.53	1.01	1.38	0.10	0.02	0.00	5.42
31	1989 / 1990	0.00	0.01	1.58	0.58	0.73	0.18	1.30	1.70	0.45	0.32	0.21	0.00	7.06
32	1990 / 1991	0.00	0.00	0.05	0.13	0.19	1.14	0.50	1.53	3.52	0.24	0.77	0.05	8.12
33	1991 / 1992	0.00	0.13	0.00	1.20	0.15	0.77	1.47	4.18	2.28	0.36	0.00	0.08	10.62
34	1992 / 1993	0.00	0.00	0.00	0.20	0.15	3.74	4.09	3.78	2.45	0.29	0.57	0.13	15.40
35	1993/1994	0.00	0.00	0.00	0.49	1.10	0.96	0.78	2.52	0.02	0.75	1.71	0.02	8.35
36	1994 / 1995	0.00	0.00	0.00	0.64	1.58	0.58	5.64	0.19	5.84	0.46	0.55	0.52	16.00
37	1995/1996	0.00	0.00	0.00	0.00	0.00	3.84	2.61	3.70	1.74	0.34	0.93	0.20	13.36
38	1996/1997	0.00	0.00	0.00	1.05	1.69	2.94	3.81	0.25	0.16	0.00	0.22	0.17	10.29
39	1997/1998	0.00	0.07	0.00	0.16	2.48								2.71
	38 YEAR AVERAGE	0.04	0.13	0.23	0.59	1.45	1.54	2.04	1.76	1.67	0.64	0.29	0.10	10.47
		Jul	Aug	Sep	Oct	Nov	Dec	Jan	Feb	Mar	Apr	May	Jun	TOTAL RAIN

for July and August of 1959 / 1960 a 35 year average was used in the absence of recorded data

9 of 14 0339802.001

(2)

Hydrology for west side channels and culverts

Peak 10-year runoff calculations

	steps 1.7		step 3			step 4	step 5		step 6		step 8			
											Eq D5	Eq D6		
shed	Area	Length	ΔZ	Slope	T_c'	i	F_m	S	I_a	Y	Q	Q_{min}	$Q_{selected}$	$Q_{cumulative}$
	(ac)	(ft)	(ft)	(ft/ft)	(min)	(in/hr)					(cfs)	(cfs)	(cfs)	(cfs)
B	0.7	410	68	0.17	7.7	2.50	0.298	2.27	0.45	0.34	1.4	0.55	1.4	1.4
C	0.5	100	28	0.28	3.9	2.07	0.298	2.27	0.45	0.34	0.9	0.34	0.9	2.3
subtotal	**1.3**													

shed	Area	Length	ΔZ	Slope	T_c'	i	F_m	S	I_a	Y	Q	Q_{min}	$Q_{selected}$	$Q_{cumulative}$
	(ac)	(ft)	(ft)	(ft/ft)	(min)	(in/hr)					(cfs)	(cfs)	(cfs)	(cfs)
K	1.5	220	58	0.26	5.5	2.52	0.298	2.27	0.45	0.34	3.1	1.18	3.1	3.1
L	0.7	140	38	0.27	4.5	2.70	0.298	2.27	0.45	0.34	1.5	0.57	1.5	4.6
G	1.0	170	38	0.22	5.1	2.70	0.298	2.27	0.45	0.34	2.1	0.79	2.1	6.6
F	2.3	280	98	0.35	5.7	2.50	0.298	2.27	0.45	0.34	4.5	1.72	4.5	11.1
subtotal	**5.4**													

shed	Area	Length	ΔZ	Slope	T_c'	i	F_m	S	I_a	Y	Q	Q_{min}	$Q_{selected}$	$Q_{cumulative}$
	(ac)	(ft)	(ft)	(ft/ft)	(min)	(in/hr)					(cfs)	(cfs)	(cfs)	(cfs)
H	2.3	260.0	98	0.38	5.4	2.55	0.298	2.27	0.45	0.34	4.6	1.78	4.6	4.6
I	1.8	155.0	46	0.30	4.6	2.70	0.298	2.27	0.45	0.34	4.0	1.51	4.0	8.6

Notes:

1. 10-year design storm per San Joaquin County Improvement Standards
2. Hydrology methodology per San Joaquin County Hydrology Manual

constants:

K	0.48	coefficient used to determine Tc'
E	0.20	coefficient used to determine Tc'
F_p	0.35	area-averaged infiltration rate for tributary pervious area (Fig C-5)
a_i	0.15	ratio of impervious area to total
a_p	0.85	ratio of pervious area to total
CN	81.5	SCS curve number, used to determine F_p
P_{24}	2.17	inches, from table B.4

equations:

$Tc' = K(L^3/\Delta Z)^E$

$Fm = a_p F_p$

$S = (1000/CN)-10$

$I_a = 0.2S$

$Y = (P_{24}-I_a)^2/(P_{24}-I_a+S)P_{24}$

$Q = 0.9(i-Fm)A$

$Q_{min} = 0.9YiA$

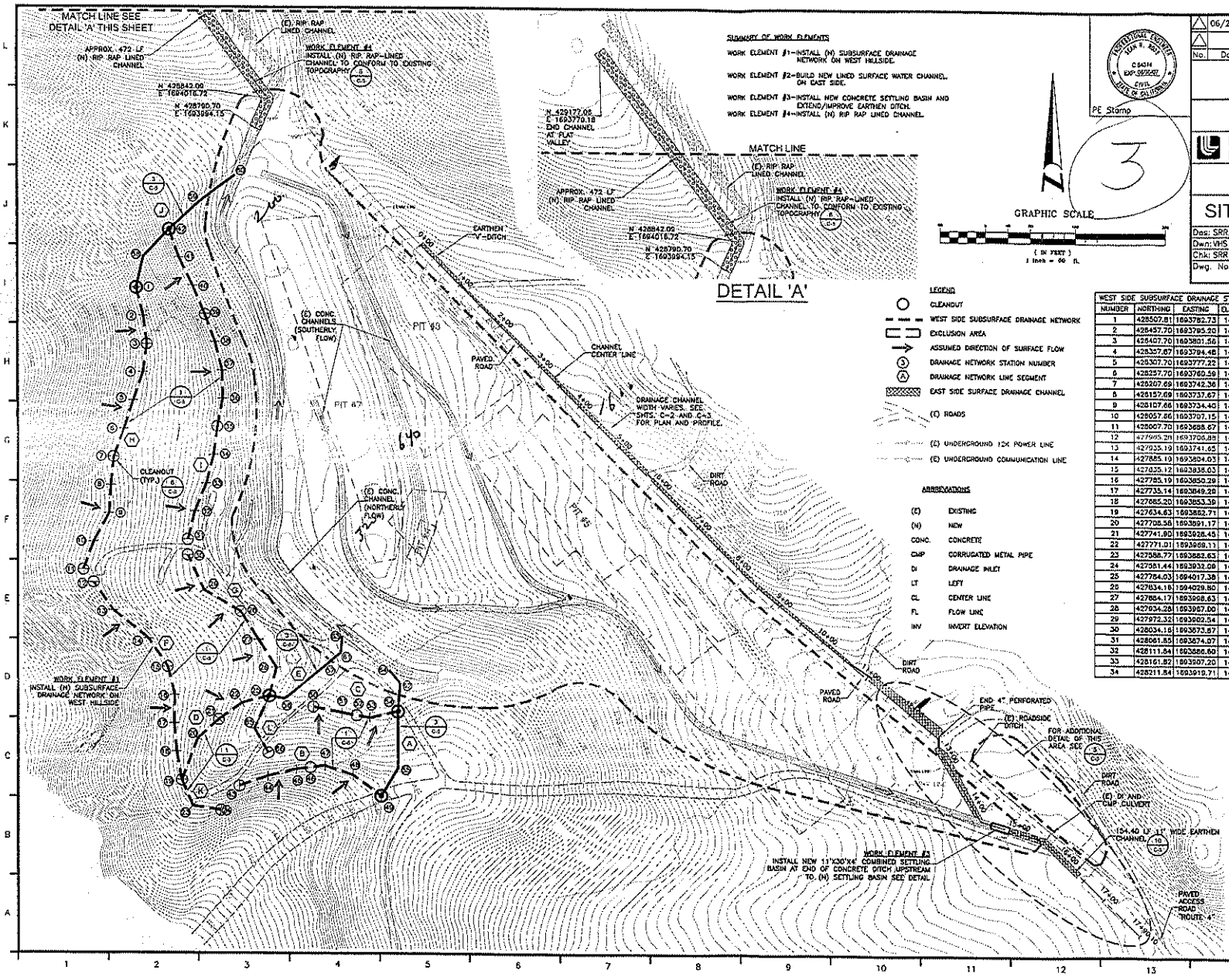

SUMMARY OF WORK ELEMENTS

WORK ELEMENT #1=INSTALL (N) SUBSURFACE DRAINAGE NETWORK ON WEST HILLSIDE.

WORK ELEMENT #2=BUILD NEW LINED SURFACE WATER CHANNEL, ON EAST SIDE.

WORK ELEMENT #3=INSTALL NEW CONCRETE SETTLING BASIN AND EXTEND/IMPROVE EARTHEN DITCH.

WORK ELEMENT #4=INSTALL (N) RIP RAP LINED CHANNEL.

LEGEND

- CLEANOUT
- WEST SIDE SUBSURFACE DRAINAGE NETWORK
- EXCLUSION AREA
- ASSUMED DIRECTION OF SURFACE FLOW
- DRAINAGE NETWORK STATION NUMBER
- DRAINAGE NETWORK LINE SEGMENT
- EAST SIDE SURFACE DRAINAGE CHANNEL
- (E) ROADS
- (E) UNDERGROUND 12K POWER LINE
- (E) UNDERGROUND COMMUNICATION LINE

ABBREVIATIONS

(E)	EXISTING
(N)	NEW
CONC.	CONCRETE
CMP	CORRUGATED METAL PIPE
DI	DRAINAGE INLET
LT	LEFT
CL	CENTER LINE
FL	FLOW LINE
INV	INVERT ELEVATION

WEST SIDE SUBSURFACE DRAINAGE STATIONS

NUMBER	NORTHING	EASTING	ELEVATION
1	428507.81	1693782.73	1480.00
2	428457.70	1693795.20	1482.00
3	428407.70	1693801.56	1484.00
4	428357.67	1693794.48	1486.00
5	428307.70	1693777.22	1488.00
6	428257.70	1693760.59	1470.00
7	428207.69	1693742.36	1472.00
8	428157.69	1693737.67	1474.00
9	428107.66	1693734.40	1476.00
10	428057.66	1693707.15	1478.00
11	428007.70	1693698.87	1480.00
12	427965.29	1693706.88	1476.00
13	427925.19	1693741.65	1474.00
14	427885.19	1693804.03	1472.00
15	427825.12	1693838.03	1470.00
16	427785.19	1693850.29	1468.00
17	427735.14	1693849.28	1466.00
18	427685.20	1693853.39	1464.00
19	427634.63	1693862.71	1462.00
20	427708.56	1693991.17	1446.00
21	427741.90	1693928.45	1442.00
22	427771.01	1693869.13	1440.00
23	427788.77	1693882.63	1434.00
24	427801.44	1693931.06	1432.00
25	427784.03	1694017.38	1428.00
26	427834.19	1694029.80	1430.00
27	427884.17	1693998.63	1432.00
28	427934.26	1693987.00	1434.00
29	427972.32	1693992.54	1436.00
30	428034.18	1693973.87	1438.00
31	428061.85	1693874.07	1438.00
32	428111.84	1693886.60	1436.00
33	428161.82	1693907.20	1434.00
34	428211.84	1693919.71	1432.00

WEST SIDE SUBSURFACE DRAINAGE STATIONS

NUMBER	NORTHING	EASTING	ELEVATION
35	428261.82	1693926.47	1430.00
36	428311.85	1693936.13	1428.00
37	428361.83	1693934.94	1426.00
38	428411.84	1693922.59	1424.00
39	428461.83	1693904.30	1422.00
40	428511.80	1693882.87	1420.00
41	428561.84	1693858.57	1418.00
42	428611.62	1693841.46	1416.00
43	427824.45	1693964.80	1456.00
44	427842.22	1694014.80	1454.00
45	427854.37	1694064.80	1452.00
46	427857.54	1694089.63	1451.00
47	427860.78	1694114.88	1450.00
48	427844.08	1694164.83	1448.00
49	427807.56	1694214.82	1446.00
50	427784.66	1694094.71	1424.00
51	427754.49	1694144.96	1422.00
52	427749.78	1694171.26	1421.00
53	427745.70	1694195.05	1420.00
54	427757.19	1694244.85	1418.00
55	427657.18	1694244.89	1438.00
56	427776.87	1694044.50	1424.00
57	427841.14	1694120.10	1412.00
58	428562.78	1693795.13	1444.00
59	428659.97	1693894.29	1400.00
60	428706.77	1693958.77	
61	427850.96	1694143.18	1409.00
62	427807.37	1694246.52	1412.00
63	427890.87	1694145.50	
64	427830.29	1694226.93	
65	427726.33	1693991.28	1430.00
66	427682.97	1694015.55	1440.00

WEST SIDE SUBSURFACE LINE SEGMENT TABLE

ALPHA	LENGTH	SEGMENT ROUTE
A	234 LF	49-54-55-52
B	270 LF	43-49
C	153 LF	50-54
D	229 LF	19-23-25
E	189 LF	25-56-57-51
F	404 LF	12-19
G	313 LF	25-30
H	522 LF	1-11
I	576 LF	31-42
J	276 LF	1-58-42-59-60
K	100 LF	19-23-24
L	113 LF	25-65-66

No.	Date	Revision	Dwn	Chk	D/C	PM	CL
1	06/22/07	65% SUBMITTAL	VHS	SRR		SRR	
2							

4 INCHES ON ORIGINAL

CERRUDO CS

WINZLER & KELLY

Lawrence Livermore National Laboratory
Plant Engineering, Livermore, CA 94550

PIT 7 COMPLEX DRAINAGE DIVERSION SYSTEM

SITE IMPROVEMENT PLAN

Des: SRR, VHS, MD, KO	06-22-07	Scale: 1"=80'	
Dwn: VHS	06-22-07	PFNID: 300-2007-001	
Chk: SRR	06-22-07	S/W: AUTOCAD 2006	
Dwg. No. 2 of 10		Sht. No. C-1 of	

PE Stamp

FILE NAME: P:\Projects\07\033907001 Cerrudo LLNL\CAD\2007-05-15\C-DRAINAGE.dwg DATE PLOTTED: June 27, 2007 - 9:22 AM

10 of 14

033907001

3

0398807001

Kent O'Brien

From: Zafer Demir [demir1@llnl.gov]
Sent: Friday, August 10, 2007 10:35 AM
To: Sean Rose; Kent O'Brien; Attila C. Oross
Cc: James Brady; Judy A. Houdeshell; Michael Taffet
Subject: PIT7DDS_20070810: Re: Permeability Data

4

Sean; Kent;

In response to both of your e-mails:

LLNL has conducted a series of Guelph Permeameter field test on the western hillslope. As Kent found in the references the Field Saturated Hydraulic Conductivity ranges from:

1.3 to 30 mm/hr with an average of 15 mm/hr

or

3.8E-05 to 1.0E-03 cm/sec

KENT

I found values of 10-3 to 10-4 cm/sec for the Qal/WBR listed in the Preliminary Data Package. I am using these. Please verify that these are the values and how they were determined. Thanks.

SEAN

Hello Zaf, just a heads up we need the permeability data ASAP as it is now on the critical path for the 100% submittal. Thanks. Sean

--

-

12 4 14 033980.7.001

UCRL-MI-228993

5

LAWRENCE
LIVERMORE
NATIONAL
LABORATORY

Preliminary Data Package for Site 300 Pit 7 Drainage Diversion System Design

Z.Demir
M. J. Taffet

March 13, 2007

Environmental Restoration Division

13/14

0339807.001

6

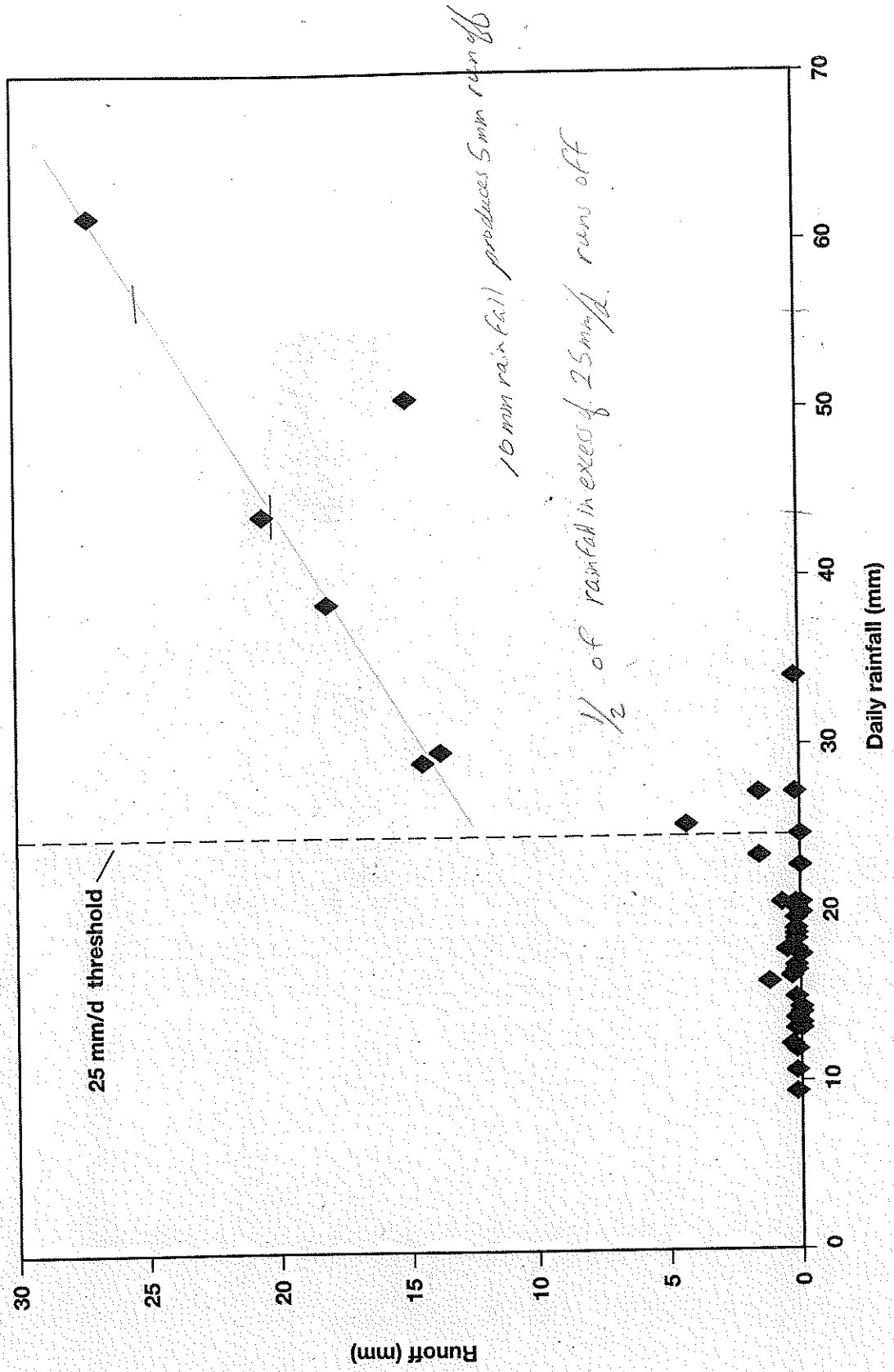

ERD-S3R-03-0240

Figure 2-12. Plot of daily rainfall vs WEPP-simulated runoff.

Preliminary Data Package 3/13/07

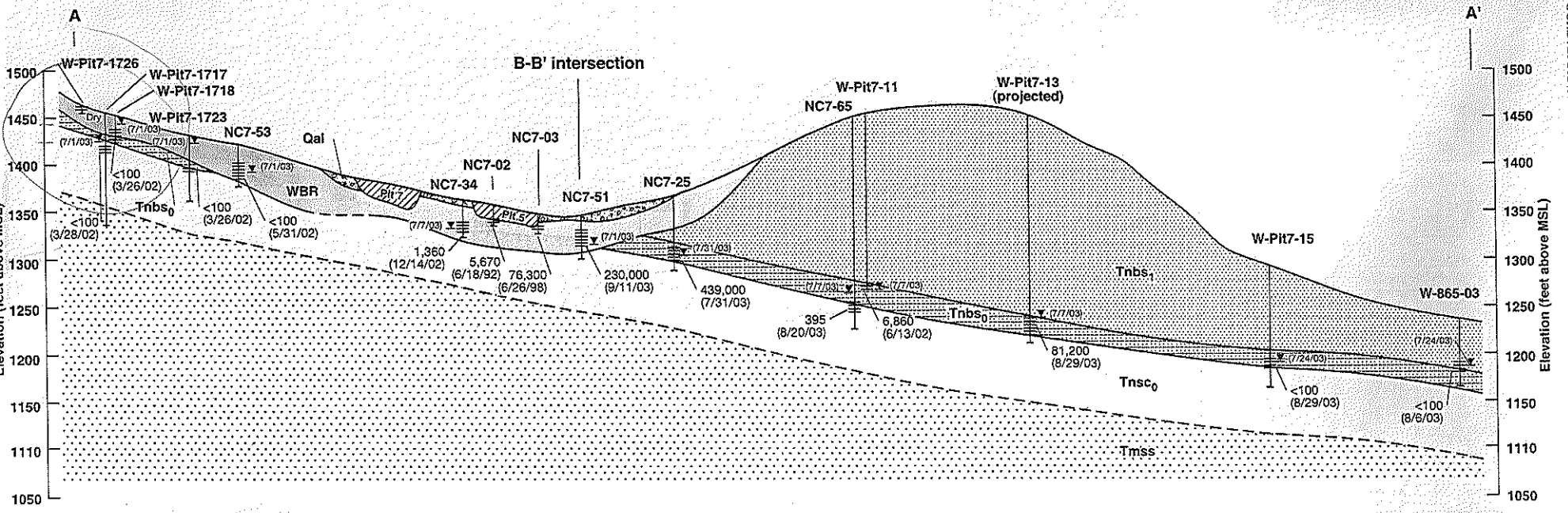

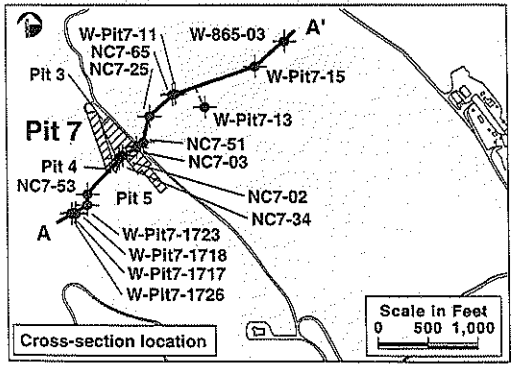

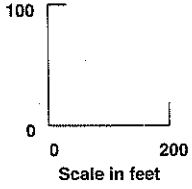

Legend

- Qal — Quaternary alluvial deposit
- WBR — Weathered bedrock
- $Tnbs_1$ — Neroly lower blue sandstone
- $Tnbs_0$ — Neroly silty sandstone
- $Tnsc_0$ — Neroly siltstone/claystone
- Tmss — Cierbo formation
- Stratigraphic contact, location approximate, dashed where inferred
- NC7- 65 — Well name
- Potentiometric surface (date measured)
- Screened interval
- 395 (8/20/03) — Most recent ground water tritium activity (pCi/L) (date)

ERD-S3R-03-0213

Figure 2-2. Hydrogeologic cross-section A-A', Pit 7 Complex Area, LLNL Site 300.

140F14

0338076 01

7

East Side

WINZLER & KELLY
CONSULTING ENGINEERS

417 Montgomery St., Suite 600
San Francisco, CA 94104-1115
(415) 283-4970

By rw Date 8/20/07 Client LLNL Sheet No. 1 of 2

Subject East Channel Analysis Job No.

Designer: Raymond Wong
Checker: Sean Rose
Date: 8/20/07

⇒ Data & Parameters for the analysis.

- high rain season total rainfall = 18 inch or 1.5 ft

- tributary areas to the east channels system (from hydrology analysis)
  = A1 + A2 + A3 + A4a + A4b + A10 = 3.7 + 10.1 + 4.3 + 7.6 + 6.0 + 3.4
  = 35.1 acres.

- on a storm event, 50% of stormwater becomes runoff, and 50% of stormwater infiltrates into ground. Of the 50% of stormwater infiltrates into ground, 25% of stormwater infiltrate into groundwater, and 75% of stormwater is lost by evapotranspiration.

- The existing ditch is assumed to have a 2-year storm capacity. It means in a given year, there is a (1/2) chance that a storm will have higher intensity than the ditch capacity so stormwater overflows to the valley. (Probability = 0.5)

- The new proposed channel ~~[illegible]~~ have a 10-year storm capacity by design. It means in a given year, there is a (1/10) chance that a storm will have higher intensity than the channel capacity so stormwater can overflows to the valley. (Probability = 0.1).

WINZLER & KELLY
CONSULTING ENGINEERS
417 Montgomery St., Suite 600
San Francisco, CA 94104-1115
(415) 283-4970

By rw Date 8/20/07 Client LLNL Sheet No. 2 of 2

Subject East Channel Analysis Job No.

Designer: Raymond Wong
Checker: Sean Rose
Date: 8/20/07

⇒ total rain volume = 1.5' x 35.1 ac = 52.65 ac.-ft

total runoff volume = 52.65 ac.-ft x 0.5 = 26.33 ac-ft.

total infiltration to groundwater volume = 52.65 ac-ft x 0.5 x 0.25
= 6.58 ac-ft.

⇒ Pre-Improvement Condition:

Total Groundwater volume from storm =
total infiltration to groundwater volume + total runoff volume
x (0.5) x (0.25)

retention after evapotranspiration that infiltrates to groundwater

probability of runoff that overtops the ditch & overland flow to the valley.

= 6.58 + 26.33 x 0.5 x 0.25 = 9.87 ac-ft

⇒ Post-Improvement Condition:

Total Groundwater volume from storm =
total infiltration to groundwater volume + total runoff volume
x (0.1) x (0.25)

retention after evapotranspiration that infiltrates to groundwater

probability of runoff that overtops the channel & overland flow to the valley.

= 6.58 + 26.33 x 0.1 x 0.25 = 7.24 ac-ft.

⇒ Summary:

	Pre-Improvement	Post-Improvement
Total Groundwater Volume from storm	9.87 ac-ft	7.24 ac-ft

∴ flow reduction = 2.63 ac-ft or 27%.

4. STRUCTURAL CALCULATIONS

WINZLER & KELLY
CONSULTING ENGINEERS
495 Tesconi Circle • #9 Park Center
Santa Rosa, CA 95401
Telephone: (707) 523-1010 / FAX (707) 527-8679

By Cruz Date 06/18/07 Client Lawrence Livermore Nat. Lab. Sheet No. 1 of 2

Subject Settling basin Job No. 03398-07-001

LOAD CASES
checked by Steve Burns 8/13/07

1: Hydrostatic Presure w/o backfill.

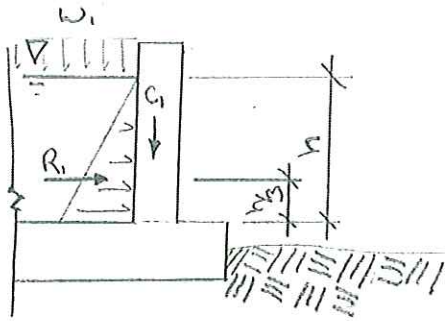

$h = 3'$

$w_1 = 3' \times 62.4$
$= 187.2$ lbs/ft

$C_1 = 3' \times 2/3' \times 1' \times 145$ pcf
$= \underline{290}$ lbs/ft

$R_1 = \frac{1}{2}[1.7(62.4 \times 3')] \times 3' = \underline{477}$ lbs/ft

2: Soil Presure w/ empty resevoir

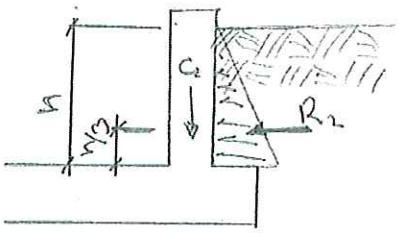

$h := 3'$

$C_2 = 290$ lbs

$R_2 = \frac{1}{2} \times [1.7(210 \times 3')]\, 3'$
$= \underline{1,607}$ lbs/ft

SHRINKAGE & TEMPERATURE STEEL (ACI 318-02)

Slab: $a_{steel}/a_{conc.} \geq 0.0018$ where $a_{conc} = 12'' \times 12''$

$\Rightarrow a_{steel} = 144 \times 0.0018 = 0.26$ in^2 (12" o.c.)

$\Rightarrow$ Use 2-#4 @12" o.c. Ea. Way (one on top & one on bottom)

Walls: $a_{steel}/a_{conc} \geq 0.0018$ where $a_{conc.} = 8'' \times 36''$

$\Rightarrow a_{steel} = 288 \times 0.0018 = 0.52$ in^2

$\Rightarrow$ Use #4 @ 12" o.c. Vert. $\Rightarrow$ Use 3-#4 Spared evenly horz.

SHEAR-FRICTION (ACI 318-02)

$V_n = A_{vf} \cdot f_y \cdot \mu$ where: $A_{vf} = 0.20$ in^2, $f_y = 60$ ksi, $\mu = 0.6\lambda$ ($\lambda = 1.0$ for normal wt. Conc.) $= 0.6$

$\Rightarrow \underline{V_n = 7.2 \text{ kips}}$

$V_u \leq \phi V_n \Rightarrow \underline{1.607 \leq 0.75(7.2) \Rightarrow \text{O.K}}$

Designer: Cody Cruz
Checker: Stephen Burns
Date: 8-15-07

WINZLER & KELLY
CONSULTING ENGINEERS
495 Tesconi Circle • #9 Park Center
Santa Rosa, CA 95401
Telephone: (707) 523-1010 / FAX (707) 527-8679

By CCruz Date 8-13-07 Client _____ Sheet No. 2 of 2

Subject Settling Basin Job No. 03398.07.001

Checked by Steve Burns 8/13/07

Concrete Shear Strength (ACI 318-02)

$V_c = \cancel{\left[1.9\sqrt{f'_c} + 2500\rho_w \frac{V_u d}{M_u}\right] b_w d}$ $\quad 2\sqrt{f'_c}\, b_w d$

where $f'_c = 4$ ksi

$\rho_w = A_s / b_w \cdot d = 0.20 / 12 \cdot 4$

$= 0.0042$

$V_u = 1{,}600$ plf

$M_u = R_2 \times 1' = 1{,}600$ lbs-ft

$= \cancel{1.9\sqrt{4{,}000} + 2500(0.0042)\,4\,(12 \times 4)}$

$2\sqrt{4{,}000\text{psi}}\,12''(4'')/(\text{ft of wall})$

$= \cancel{2.1\text{ k}}$

$6.07^{k}/(\text{ft of wall})$

$V_u \le \phi V_c \Rightarrow 1.6 \le 0.75\,(\cancel{2.1}\ 6.07) \Rightarrow 1.6 \cancel{\le 1.6}\ \ll 6.07$ O.K.

Flexure @ Wall

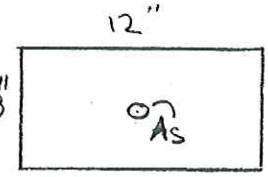

M_n wall: $a = \frac{A_s f_y}{0.85 f'_c b} = \frac{0.20(60\text{ ksi})}{0.85(4\text{ ksi})12}$

$= \cancel{2.94}\ 0.294$

$M_n = A_s f_y (d - a/2) = 0.20(60)\left[4 - \frac{\cancel{2.94}\ 0.294}{2}\right]$

$= \cancel{30.4\text{ k-ft}}\ 46.2^{\text{"k}} = \cancel{2.5\text{ k-ft}}\ 3.85^{\text{"k}}$

$M_u \le \phi M_n \Rightarrow 1.6\text{ k-ft} \le 0.9 \cdot \cancel{2.5}\ 3.85 \Rightarrow 1.6 \le \cancel{2.3}\ 3.5$ O.K.

Development Length of wall dowels (ACI 318-02)

Designer: Cody Cruz
Checker: Stephen Burns
Date: 8-15-07

$l_{hb} = \frac{1200 d_b}{\sqrt{f'_c}} = \frac{1200(0.5'')}{\sqrt{4{,}000\text{psi}}} = 9.49''$

$l_{dh} = 0.7 \times l_{hb} = 6.64'' \begin{cases} > 8d_b = 4'' \\ > 6'' \end{cases}$

side cover > $2\frac{1}{2}''$, cover on bar extension > 2"

$(l_{dh})_{provided} = 12'' - 3'' - 1.5(0.5'') = 8.25'' > l_{dh}$ O.K.

cover

PFN 300 2007 001

SPECIFICATION WK-0339807001

PIT 7 COMPLEX

DRAINAGE DIVERSION SYSTEM

SITE 300

UNIVERSITY OF CALIFORNIA

LAWRENCE LIVERMORE NATIONAL LABORATORY

Livermore, California 94550

WINZLER & KELLY

417 Montgomery St, Suite 600

San Francisco, California 94104

This page intentionally left blank

PROFESSIONAL CERTIFICATION

The designs, specifications, and drawings comprising this subcontract have been prepared by or under the cognizance of registered professional engineers holding a valid license in the State of California issued by the State Board of Registration for Professional Engineers and/or licensed architects holding valid licenses in the State of California issued by the Board of Architectural Examiners.

CIVIL

Sean R. Rose	9/14/07
Name	Date
C64314	06/30/09
No.	Expires

STRUCTURAL

Stephen C. Burns	9/14/07
Name	Date
S42229	6/30/08
No.	Expires

This page intentionally left blank

TABLE OF CONTENTS

Section	Title

DIVISION 1 GENERAL REQUIREMENTS **(SUBMITTED SEPARATELY IN RFP)**

DIVISION 2 SITEWORK

02110	Site Clearing
02200	Earthwork
02270	Riprap
02513	Asphaltic Concrete Paving
02710	Subdrainage Systems
02720	Storm Sewer Systems
02722	Culverts
02936	Seeding
02950	Plants and Ground Cover

DIVISION 3 CONCRETE

03100	Concrete Formwork
03200	Concrete Reinforcement
03300	Cast-in-Place Concrete

ATTACHMENTS

Attachment 1: Product Data

END OF TABLE OF CONTENTS

SECTION 02110 — SITE CLEARING

PART 1 GENERAL

1.01 SECTION INCLUDES

A. Vegetation clearing and grubbing, including root systems of shrubs

B. Sod stripping

C. Soil stripping and stockpiling

D. Removal and disposal of asphalt, concrete, aggregate base, and surface debris

E. Identifying, disconnecting, removing designated sections, and capping remaining ends of site utilities

1.02 RELATED SECTIONS

A. Section 02200 "Earthwork"

1.03 SUBMITTALS

A. Submit safety plans, procedures, and closeout submittals in accordance with section 01300 “Submittals.”

B. Safety Plans: Site-specific safety/work plans required in section 01200 "General Safety Provisions."

C. Procedures: Demolition and removal procedures, and schedule.

D. Closeout Submittals: Record drawings indicating existing conditions, including location of capped site utilities.

1.04 EXISTING CONDITIONS

A. Conduct demolition to minimize interference with adjacent structures. Cease operations immediately if adjacent structures appear to be in danger. Promptly notify the University and do not resume demolition operations until directed by the University.

B. Conduct operations with minimum interference to travel ways. Maintain protected egress and access at all times.

C. Provide, erect, and maintain temporary barriers and security devices. Do not, however, close or obstruct roadways or sidewalks without prior written approval from the University.

PART 2 PRODUCTS

Not used

PART 3 EXECUTION

3.01 PROTECTION

A. Locate, identify, and protect existing landscaping materials, appurtenances, and structures that are not to be demolished.

B. Protect bench marks and survey control points from damage or displacement.

3.02 CLEARING

A. Clear areas required for access to site and execution of work.

B. Remove shrubs within marked areas and relocate as directed by the University Representative. Grub out stumps, roots, and surface rock.

C. Clear undergrowth and deadwood without disturbing subsoil.

D. Strip sod within marked areas.

E. Remove concrete slabs, paving, and base where indicated on the drawings. Where leaving adjacent portions, neatly saw cut edges at right angles to the surface.

3.03 REMOVAL AND REUSE

A. Remove and dispose of asphalt, concrete, aggregate base, and other debris off site in accordance with section 01210 “Environmental Protection.”

B. Reuse existing rip rap as indicated on Plans.

3.04 SOIL STRIPPING AND STOCKPILING

A. Carefully excavate topsoil without mixing it with foreign materials.

B. Stockpile topsoil to height not exceeding 8 feet, in location indicated by the University. Store in accordance with section 01210 “Environmental Protection” for final disposition.

C. Do not excavate wet topsoil.

D. Remove from site excess topsoil not intended for reuse.

3.05 BACKFILLING

All pits, holes, and depressions resulting from the work shall be filled and the entire area leveled to match adjacent existing contours in accordance with section 02200.

END OF SECTION

SECTION 02200 — EARTHWORK

PART 1 GENERAL

1.01 SECTION INCLUDES

A. Site excavation

B. Site utility trenching

C. Building perimeter, utility, and site backfilling (NOT APPLICABLE)

D. Fill under slabs on grade

E. Aggregate base and subbase

F. Compaction

1.02 REFERENCES

A. The following documents form a part of these specifications to the extent stated herein.

B. State of California Code of Regulations (CCR)

CCR Title 8 Industrial Relations; Division 1 - Department of Industrial Relations, Chapter 4 - Division of Industrial Safety (DIS):
- SubCh 4. Construction Safety Orders
- SubCh 5. Electrical Safety Orders
- SubCh 7. General Industry Safety Orders

C. State of California, Department of Transportation (CALTRANS)

CALTRANS Manual of Test

CALTRANS Standard Specifications:
- Sec 19. Earthwork
- Sec 26. Aggregate Bases

D. ASTM International (ASTM)

ASTM D 1557 Standard Test Methods for Laboratory Compaction Characteristics of Soil Using Modified Effort (56,000 ft-lbf/ft3)

ASTM D 2419 Standard Test Method for Sand Equivalent Value of Soils and Fine Aggregate

1.03 SUBMITTALS

A. Submit project record documents under provisions of section 01300 “Submittals.”

A.1 Project Record Documents: Provide as-built data, field measured in both vertical and horizontal positions to within 0.2 of one foot.

A.2 Utilities: Locate new underground utilities at both vertical and horizontal elbows, tees, valves, and all structures in accordance with section 01200 “General Safety Provisions.” Include crossing existing utilities. Contact Construction Manager for on-site line locating services, if needed.

A.3 Surface Survey: Provide a surface survey reflecting all construction changes to the design drawings (e.g., storm drain structures, poles, etc.) and ground contours. Indicate ground surface changes at contour intervals consistent with the design drawings.

A.4 Field Points: Provide an ASCII file of all surveyed field points, including field log files in either hard or electronic copy.

A.5 Refer to section 01720 "Project Closeout" for general project record submittal requirements.

1.04 QUALITY ASSURANCE

Conform to and comply with DIS Safety Orders when trenching and backfilling.

PART 2 PRODUCTS

2.01 FILL MATERIALS

A. Reused Excavated Material: Material free of organic or other foreign matter; graded free of lumps and rock larger than 3 inches in any dimension; and approved by the University for backfill.

B. Imported Earth Fill: Any soil-rock material that will compact thoroughly without the presence of excessive voids when watered and rolled, and which has been approved by the University. The material shall not contain rocks or lumps over 3 inches in greatest dimension. The fill shall be granular in appearance and not show excessive shrinkage or swelling when subjected to change in water content. It shall conform to and comply with the following requirements (according to CALTRANS Manual of Test):

B.1 Minimum "R" (Resistance) Value 45

B.2 Maximum Expansion Pressure 100

C. Imported Bedding Material: Clean, crushed rock, gravel, or sand with a minimum sand equivalent value of 50 in accordance with ASTM D 2419; approved by the University; and meeting the following gradation requirements:

SIEVE SIZE	PERCENT PASSING
1 inch	100
3/4 inch	95 - 100

D. Aggregate Base for Paving and Concrete Pads: CALTRANS Sec 26 class 2 material.

2.02 ACCESSORIES

Geotextile Fabric: Propex “Geotex 801”

PART 3 EXECUTION

3.01 EXAMINATION

A. Verify that stockpiled fill and imported fill are approved by the University.

B. Verify that areas to be backfilled are free of debris, ice, or water, and ground surfaces are not frozen.

C. By starting the work of this section, the Subcontractor warrants that it has examined and verified that the existing conditions comply with the provisions of the preceding paragraphs of subpart 3.01.

D. Notify the University of unexpected subsurface conditions, and discontinue work in affected area until notified by the University to resume work.

3.02 PROTECTION

A. Protect shrubs, vegetation, and other features remaining as a portion of final landscaping.

B. Protect existing structures, fences, and paving from equipment and vehicular traffic.

C. Maintain and protect above and below grade existing utilities scheduled to remain, that pass through work area.

D. Protect excavations by shoring, bracing, sheet piling, underpinning, or other methods required to prevent cave-in or loose soil from falling into excavation.

E. Underpin adjacent structures that may be damaged by excavation work, including service utilities and pipe chases.

F. Protect bottom of excavations from frost.

G. During construction, keep embankments and excavations shaped and drained. Maintain effective drainage at all times in adjacent ditches and drains.

3.03 PREPARATION

A. Identify required lines, level, contours, and datum.

B. LLNL Plant Engineering shall identify known underground utilities at Site 300 by pot-holing and other means prior to any excavation or trenching. The Contractor shall not perform any excavation or trenching prior to this occurring.

C. Notify the University 48 hours in advance when ready to abandon existing utility lines and to reconnect utilities.

3.04 EXCAVATION AND TRENCHING

A. Excavation shall not interfere with normal 45 degree bearing splay of foundations.

B. Hand trim excavations and for bell-and-spigot pipe joints.

C. Bottom of excavation shall be firm, hard, and free from foreign matter.

D. Remove lumped subsoil, boulders, and rock larger than 6 inches.

E. Cut sides of trenches as neat, parallel, and vertical as soil conditions permit. Cut trenches sufficiently wide to enable installation of utilities and allow inspection.

F. Keep one side of the trench completely free of excavated material and on the other side, place the excavated material sufficiently far away from the trench centerline so that the toe of the pile of excavated material is at least 2 feet from the edge of the trench.

G. Install impermeable geotextile fabric in trench, ditch and channel construction as shown on Drawings. Ensure joints are continuously overlapped to ensure no open joints.

H. Correct unauthorized excavation at no additional cost to the University. Bring back excavation below that required by these specifications or indicated by the drawings to the correct grade with imported sand fill.

I. Stockpile excavated material in areas designated on site in accordance with section 01210 "Environmental Protection" for University testing. Final disposition of material is dependent on test results. Refer to the subpart entitled, "Salvable and Excess Materials" in section 01010 “Administrative “Requirements” for further information.

3.05 SUBGRADE PREPARATION

A. Prior to backfilling, ensure the existing subgrade conforms to and complies with CALTRANS Sec 19. Subgrade preparation is required at each of the various fill elevations, depending on the number of layers of material required to achieve the finished grade elevations.

B. Compact each finished subgrade layer for paved areas to a relative compaction of 95% of maximum density to a depth of 0.5 feet, as determined by CALTRANS Sec 19 test, immediately before material is placed thereon.

C. The subgrade shall be smooth, uniform, and true to the required grade and cross section, and shall be within the following tolerances:

TYPE SUBGRADE	TOLERANCE
Under Compacted Fill	± 0.2 ft
Under Aggregate Base	- 0.2 ft

D. When the moisture content of the subgrade is improper for the required compaction, scarify the subgrade to a depth of 0.5 feet and water or dry as necessary to reach optimum moisture content for compaction.

E. Cut out soft areas of subgrade not capable of insitu compaction. Backfill and compact to density equal to or greater than requirements for subsequent backfill material.

F. Give notice to the University 48 hours before the initial subgrade is ready for testing. Any delay in subgrade preparation after the initial notice is given may require a 48-hour renotification.

G. Do not lay base course or piping until the subgrade has been checked and approved by the University.

3.06 BACKFILLING

A. Prior to backfilling trenches, install impermeable geotextile fabric in trench as shown on Drawings. Ensure joints are continuously overlapped to ensure no open joints

B. Backfill areas to contours and elevations. Use unfrozen materials.

C. Backfill systematically, as early as possible, to allow maximum time for natural settlement. Do not backfill over porous, wet, or spongy subgrade surfaces.

D. Spread fill material in layers not exceeding 0.7 feet before compaction; in trenches layers shall not exceed 0.5 feet.

E. Maintain optimum moisture content of fill and backfill materials to attain required relative compaction density of 95%, as determined by ASTM D 1557.

F. Employ a placement method so not to disturb or damage utilities in trenches.

G. Backfill against supported foundation walls.

H. Slope grade away from building at least 3 inches in 10 feet, unless noted otherwise. Make changes in grade gradual. Blend slopes into level areas.

3.07 TOLERANCES

Top Surface of Backfilling: ± 1 inch.

3.08 FIELD QUALITY CONTROL

A. Provide for visual inspection of bearing surfaces.

B. The University will employ and pay for the services of an independent testing laboratory in accordance with section 01400 “Quality Control” to make compaction tests at each subgrade layer to determine in-place relative density, to establish and

maintain quality control of the work in progress, and to give written certification of compliance with the requirements of these specifications. The proposed number and location of tests for each subgrade layer will be determined by the University.

C. When tests made by the testing laboratory show a relative compaction below that required, the limits of inadequate compaction shall be established by the University. Remove material or scarify to the required depth and recompact. The Subcontractor shall bear the costs of recompaction and retesting of inadequately compacted fill.

3.09 CLEANING

Leave stockpile areas completely free of materials not intended for reuse. Remove surplus backfill materials from site in accordance with section 01010 “Administrative Requirements.”

END OF SECTION

SECTION 02270 — RIPRAP

PART 1 GENERAL

1.01 SECTION INCLUDES

Install riprap, new and reused.

1.02 REFERENCES

A. The following documents form a part of these specifications to the extent stated herein.

B. State of California, Department of Transportation (CALTRANS)

CALTRANS Standard Specifications: Sec 90.Portland Cement Concrete (2006)

1.03 SUBMITTALS

A. Submit certificates of compliance for the following materials under provisions of section 01300 “Submittals.”

A.1 Stone

A.2 Concrete

PART 2 PRODUCTS

2.01 MATERIALS

A. Stone:

A.1 Riprap shall be re-used from existing stockpiles on Site 300. If additional riprap is needed it shall conform to Caltrans specifications and shall be sized according to Drawings.

A.2 Stone shall be sound, durable, hard, resistant to abrasion, and free from laminations, weak cleavage planes, and the effects of weathering. Stone shall not disintegrate from the action of air, water, or from handling and placing. All material shall be clean and free from impurities such as alkali, earth, clay, refuse, and adherent coatings.

A.3 Stone shapes shall form a stable, protective structure of the required section.

A.4 Do not use flat or elongated stones unless the thickness of the individual pieces is at least 1/3 the length.

B. Concrete:

B.1 Concrete shall be class B concrete or minor concrete as specified in CALTRANS Sec 90, using 3/8-inch maximum sized combined aggregate and mix as provided for structures.

B.2 Water content and workability of concrete shall permit gravity flow into the interstices with limited filling and spading.

PART 3 EXECUTION

3.01 EXAMINATION

A. Examine related work and surfaces before starting work of this section.

B. Report to University, in writing, conditions that will prevent proper execution of this work.

C. By beginning work of this section, the Subcontractor warrants that it has examined and verified that the existing conditions are in accordance with the provisions of preceding paragraphs of subpart 3.01.

3.02 COORDINATION

Coordinate work with work of other subcontractors working on the building site under provisions of section 01010 “Administrative Requirements.”

3.03 INSTALLATION OF CONCRETE

A. Place concrete in a continuous operation for any day's run at any one location.

B. Bring concrete to the place of final deposit using chutes, tubes, buckets, pneumatic equipment, or other mechanical methods.

3.04 INSTALLATION OF STONE

A. Set stones after concrete is placed, at locations and in the manner indicated on the drawings.

B. Surface irregularities shall not vary from planned slope by more than 3 inches, measured at right angles to the slope.

D. After placing stone, thoroughly brush and clean the stones of all excess concrete. Outer stones shall project 1/3 to 1/4 of their diameter above the concrete surface.

E. After completion of any 10-foot strip, do not permit a worker or a load on the surface for at least 24 hours, or longer if so ordered by the University.

END OF SECTION

SECTION 02513 — ASPHALTIC CONCRETE PAVING

PART 1 GENERAL

1.01 SECTION INCLUDES

A. Aggregate base and subbase

B. Asphaltic concrete paving

C. Seal coat

D. Fog seal

1.02 RELATED SECTIONS

A. Section 02200 "Earthwork" for compacted fill for paving

1.03 REFERENCES

A. The following documents form a part of these specifications to the extent stated herein.

B. State of California, Department of Transportation (CALTRANS)

CALTRANS Standard Specifications:
- Sec 26. Aggregate Bases
- Sec 37. Bituminous Seals
- Sec 39. Asphalt Concrete
- Sec 92. Asphalts
- Sec 93. Liquid Asphalts
- Sec 94. Asphaltic Emulsions

1.04 SUBMITTALS

A. Submit mix design(s) and product data under provisions of section 01300 “Submittals.”

B. Proposed mix design [of each class of mix] shall be approved by the University prior to commencement of work.

1.05 QUALITY ASSURANCE

A. Perform work in accordance with CALTRANS Sec 37, 39, 92, 93, and 94.

B. Obtain materials from same source throughout.

C. Do not place asphalt when base surface temperature is less than 40° F.

PART 2 PRODUCTS

2.01 MATERIALS

A. Aggregate Base: Refer to section 02200.

B. Primer: SS1 liquid asphalt.

C. Tack Coat: SS1 liquid asphalt.

D. Asphalt Cement: PG64-10.

E. Aggregate for Binder Mix: 1/2 inch maximum, type B.

F. Seal Coat: RS2 or CRS2 asphaltic emulsion.

G. Fog Seal: SS1 asphaltic emulsion.

2.02 ASPHALT PAVING MIX

Use dry materials to avoid foaming. Mix uniformly.

PART 3 EXECUTION

3.01 EXAMINATION

A. Verify that compacted subgrade is dry and ready to support paving and imposed loads.

B. Verify that gradients and elevations of base are correct.

C. By starting the work of this section, the Subcontractor warrants that it has examined and verified that the existing conditions are in accordance with the provisions of the preceding paragraphs of subpart 3.01.

3.02 PREPARATION

A. Recompact disturbed AB to 95% relative compaction

B. Apply primer over substrate at uniform rate of 0.27 gal/sq yd.

C. Apply primer only if temperature of base material is greater than 60°F.

D. Use clean sand to blot excess primer.

E. Apply tack coating to contact surfaces of existing asphalt concrete paving.

F. Apply tack coat, at a rate of 0.05 gal/sq yd of surface, to all horizontal and vertical surfaces of existing pavement against which additional materials are to be placed.

3.03 PLACING ASPHALT PAVEMENT

A. Place initial course within 24 hours of priming base surfaces. Place topping course within 2 hours after placing and compacting course.

B. Place course to compacted thickness identified on the drawings.

C. Compact pavement by rolling. Do not displace or extrude pavement from position. Hand compact in areas inaccessible to rolling equipment.

D. Develop rolling with consecutive passes to achieve even and smooth finish, without roller marks.

3.04 TOLERANCES

A. Flatness: Maximum variation of 1/4 inch measured with 10-foot straight edge.

B. Compacted Scheduled Thickness: Within 1/4 inch of design thickness.

C. Variation from True Elevation: Within 1/2 inch.

3.06 SEAL COAT

Apply binder and cover material at the following rates:

TYPE	SCREENING SIZE	SCREENING WEIGHT	RESIDUAL BITUMINOUS BINDER
1st Application	1/2" x No. 4	23-30 lb/sq yd	0.20-0.35 gal/sq yd
2nd Application	1/4 x 5/64"	12-20 lb/sq yd	0.20-0.30 gal/sq yd

TYPE	SCREENING SIZE	SCREENING WEIGHT	RESIDUAL BITUMINOUS BINDER

3.07 FOG SEAL

A. Immediately before the application of the fog seal, clean the area to be sealed of all dirt and loose material.

B. Apply fog seal at a rate of 0.07 gal/sq yd of bituminous binder.

C. Add water to the material and mix in such proportion that the resulting mixture shall contain less than 50% of added water. Apply the resulting mixture so that the original emulsion will be spread at the specified rate. Mixture and application shall conform to and comply with CALTRANS Sec 37 and 94.

3.08 PROTECTION

Immediately after placement, protect pavement from mechanical injury for two days.

END OF SECTION

SECTION 02710 — SUBDRAINAGE SYSTEMS

PART 1 GENERAL

1.01 SECTION INCLUDES

A. Collection and distribution drainage system complete with required couplings and accessories

B. Aggregate setting bed and cover

1.02 RELATED SECTIONS

A. Section 02720 “Storm Sewer Systems” for drainage piping

B. Section 02200 “Earthwork” for trenching

1.03 REFERENCES

A. The following documents form a part of these specifications to the extent stated herein.

B. ASTM International (ASTM)

B.1	ASTM D 1117	Standard Guide for Evaluating Nonwoven Fabrics
B.2	ASTM D 3776	Standard Test Method for Mass per Unit Area (Weight) of Woven Fabric
B.3	ASTM D 4632	Standard Test Method for Grab Breaking Load and Elongation of Geotextiles
B.4	ASTM D 6693	Standard Test Method for Determining Tensile Properties of Nonreinforced Polyethylene and Nonreinforced Flexible Polypropylene Geomembranes
B.5	ASTM D 3786	Standard Test Method for Bursting Strength of Textile Fabrics—Diaphragm Bursting Strength Tester Method
B.6	ASTM D 737	Standard Test Method for Air Permeability of Textile Fabrics

PART 2 PRODUCTS

2.01 MATERIALS

A. Drainage Pipe: Perforated and non-perforated flexible HDPE pipe; 4, 6, 12 inch inside diameter perforated pipe and 15 inch inside diameter non-perforated pipe as indicated on the Drawings; complete with required couplings and fittings.

B. Filter Aggregate: Clean, well-graded natural gravel or crushed stone; free from shale, clay, organic materials and debris; graded within the following limits:

SIEVE SIZE	% PASSING
1-1/2 inch	95 TO 100
1 inch	90 to 100
3/4 inch	50 to 100
5/8 inch	30 to 85
1/2 inch	13 to 55
3/8 inch	0 to 30
1/4 inch	0
No. 4	0

C. Drain Rock: Rock should vary in size from 3 to 5 inches and be angular in shape for stability purposes. The rock should withstand normal weathering.

D. Filter Fabric: Permeable non-woven jute, polyester, nylon, polypropylene, or combination of same conforming to and complying with the following:

CHARACTERISTIC	TEST METHOD	MINIMUM VALUE
Weight	ASTM D 3776	4 oz/sq yd
Grab Tensile Strength	ASTM D 4632	140lbf
Elongation at Break	ASTM D 4632	50%

E. Channel Liner: HDPE

CHARACTERISTIC	TEST METHOD	MINIMUM VALUE
Thickness		60 mil
Yield Strength	ASTM D 6693	120 lb/in
Break Strength	ASTM D 6693	220 lb/in
Elongation at Break	ASTM D 6693	700%

F. Polyester Drain Sock:

CHARACTERISTIC	TEST METHOD	MINIMUM VALUE
Fiber size		100 to 200 denier/ filament
Weight	ATSM D 3776	2.5 to 3.5 ounces/yd^2
Burst Strength	ASTM D 3786	100-135 lb/in
Air Permeability	ASTM D 737	700 CFM/ft^2
Equivalent Opening Size	USACOE, W 02215	30 to 40

G. Erosion Control: Blanket

CHARACTERISTIC	
Material	Polypropylene with UV degrader additive
Color	White
Fiber Size	80% at min 6 inches long 0.038” ± 0.008” wide 0.018” ± 0.003” thick
Unit Weight	0.73 lb/yd^2 ± 10%
Net Opening	1.0” wide by 2.0” long

PART 3 EXECUTION

3.01 INSTALLATION

A. Install filter fabric, HDPE liner and erosion control blankets as specified in the respective product data sheets in Attachment 1.

B. Install drainage system with filter aggregate zone.

C. Hand trim excavations to required elevations. Do not overexcavate. Remove large stones or other hard matter that could damage drainage pipe.

D. Place drainage pipe on at least 1 inch deep bed of coarse filter aggregate as shown on the Drawings.

E. Prior to placing filter aggregate cover, allow the University to make visual inspection of installed drainage pipe.

END OF SECTION

SECTION 02720 — STORM SEWER SYSTEMS

PART 1 GENERAL

1.01 SECTION INCLUDES

A. Storm drainage pipe

B. Concrete storm-water inlets with frame and grate (NOT USED)

C. Precast concrete manholes and cleanouts (NOT USED)

D. Tracer wire (NOT USED)

1.02 RELATED SECTIONS

Section 02200 "Earthwork”

1.03 REFERENCES

A. The following documents form a part of these specifications to the extent stated herein.

B. State of California, Department of Transportation (CALTRANS)

CALTRANS Standard Specifications:
- Sec 64. Plastic Pipe
- Sec 65. Reinforced Concrete Pipe
- Sec 66. Corrugated Metal Pipe
- Sec 70. Miscellaneous Facilities (NOT USED)
- Sec 90. Portland Cement Concrete (2006)

C. ASTM International (ASTM)

ASTM A 48 Standard Specification for Gray Iron Castings (NOT USED)

ASTM A 74 Standard Specification for Cast Iron Soil Pipe and Fittings

ASTM A 53 Standard Specification for Pipe, Steel, Black and Hot-Dipped, Zinc-Coated, Welded and Seamless

ASTM A 105 Standard Specification for Carbon Steel Forgings for Piping Applications

ASTM C 76	Standard Specification for Reinforced Concrete Culvert, Storm Drain, and Sewer Pipe (NOT USED)
ASTM C 478	Standard Specification for Precast Reinforced Concrete Manhole Sections (NOT USED)
ASTM D 1056	Standard Specification for Flexible Cellular Materials - Sponge or Expanded Rubber
ASTM D 2321	Standard Practice for Underground Installation of Thermoplastic Pipe for Sewers and Other Gravity-Flow Applications (NOT USED)
ASTM D 3212	Standard Specification for Joints for Drain and Sewer Plastic Pipes Using Flexible Elastomeric Seals (NOT USED)
ASTM D 3350	Standard Specification for Polyethylene Plastics Pipe and Fittings Materials
ASTM F 405	Standard Specification for Corrugated Polyethylene (PE) Pipe and Fittings

1.04 SUBMITTALS

A. Submit shop drawings in accordance with the provisions of section 01300 “Submittals.”

B. Shop Drawings: Include dimensioned detailed drawings of storm-water inlets, frame, and grate.

PART 2 PRODUCTS

2.01 STORM SEWER PIPE

A. High Density Polyethylene Pipe (HDPE) Pipe: ASTM D 3350 cell classification 423410C.

B. Corrugated Metal Pipe (CMP): CALTRANS Sec 66.

C. Galvanized Steel Pipe: ASTM A 53

2.02 STORM SEWER PIPE JOINTS

A. HDPE:

A.1 Split or snap couplings: ASTM F 405.

A.2 Gasketed connections: ASTM D 1056 Grade 2A2.

A.3 Lubricant: Type approved by pipe manufacturer.

A.4 Adapter for Connecting Pipe to Storm-Water Inlet or Existing Pipe: Type recommended by pipe manufacturer.

A.4 Joints to Dissimilar Pipe: A flexible mechanical-compression joint with type UNS S30500 stainless steel bands and screws; Joints, Inc. (Calder) of Gardena, CA; Fernco Inc. of Davison, MI; or equal.

B. CMP:

B.1 Gasketed Joints: CALTRANS Sec 65, 1.06B.

B.2 Connection Bands: CALTRANS Sec 66, 1.07; bolted band, rod-and-jug, or metal-sleeve joint.

C. Galvanized Steel Pipe:

C.1 Flange: ASTM A 105.

2.03 STORM-WATER INLETS

A. Provide precast or cast-in-place concrete inlet with cast-iron frame and grate as detailed on the drawings.

B. Concrete for cast-in-place inlets shall be class B, five-sack-mix concrete in accordance with CALTRANS Sec 90.

2.04 CLEANOUTS

PVC: ASTM D 2321

Galvanized Iron: ASTM A 74

2.05 TRACER WIRE (NOT APPLICABLE)

PART 3 EXECUTION

3.01 STORM SEWER PIPING

Use the storm sewer piping specified on the drawings.

3.02 TRENCHING

Excavate, trench, and backfill for inlets and manholes as specified in section 02200.

3.03 PIPE INSTALLATION

A. Handle and install pipe in accordance with manufacturer's recommendations and as specified.

B. Lay pipe accurately to the line and grade designated on the drawings.

C.1 Carefully center piping so that when laid, it will form a sewer with uniform invert.

C.2 Keep trenches water-free and as dry as possible during bedding, laying, and jointing. Place aggregate fill as soon as possible after the joint is made.

C.3 Protect the pipe against impact, shock, and free fall during handling and laying.

C.4 Keep pipe clean at all times.

3.04 INLET CONNECTIONS

A. Provide watertight connections of pipe to inlets using flexible water stops, resilient connectors, or other flexible systems approved by the University.

A.1 Methods of connection shall be in accordance with pipe manufacturer's recommendations.

A.2 If portland-cement grout is used, it shall be the expanding-type grout.

3.05 TRACER WIRE INSTALLATION (NOT APPLICABLE)

3.06 FIELD QUALITY CONTROL

A. Installation Testing:

A.1 Prior to backfilling, the University will conduct dye testing to confirm and document source and destination of each subgrade drainage installation.

A.2 If testing results are at variance with project documents, the Subcontractor shall determine and correct the installation problem at no additional cost to the University. The University will retest upon Subcontractor notification of correction.

A.3 Notify the University at least 24 hours in advance of desired time for both the initial testing and any subsequent retesting.

END OF SECTION

SECTION 02722 — CULVERTS

PART 1 GENERAL

1.01 SECTION INCLUDES

A. Storm drainage pipe for culverts

B. Flared culvert end sections

1.02 RELATED SECTIONS

Section 02513 "Asphaltic Concrete Paving"

1.03 REFERENCES

A. The following documents form a part of these specifications to the extent stated herein.

B. State of California, Department of Transportation (CALTRANS)

B.1 CALTRANS Standard Specifications:

Sec 19.	Earthwork
Sec 56.	Signs
Sec 66.	Corrugated Metal Pipe
Sec 70.	Miscellaneous Facilities

PART 2 PRODUCTS

2.01 CULVERT PIPE

A. Culvert pipe shall conform to CALTRANS Sec 66.

B. The minimum thickness of the corrugated metal pipe should be 14 gauge.

2.02 CONNECTION BANDS

A. Use metal connection bands of the types listed below. In all cases, the metal connection bands used shall preserve the pipe alignment and prevent infiltration of water and fill material.

A.1 Bolted band

A.2 Rod and lug

A.3 Metal sleeve joint

B. Connection bands shall conform to CALTRANS Sec 66, 1.07.

PART 3 EXECUTION

3.01 INSTALLATION

A. Unless otherwise specified, install flared culvert end sections at the ends of pipes and pipe arches that have outside diameters of 12 inches or greater. Install end sections true to line and grade.

B. To prevent erosion, install asphaltic concrete around ends of pipe that have outside diameters less than 12 inches in accordance with section 02513 "Asphaltic Concrete Paving."

C. Lay pipe accurately to the line and grade designated on the drawings.

C.1 Carefully center piping so that, when laid, it will form a culvert with uniform invert.

C.2 Protect the pipe against impact, shock, and free fall during handling and laying.

C.3 Keep pipe clean at all times.

D. Backfill with suitable material from the excavation or other University-approved materials.

D.1 Place backfill in horizontal layers not greater than 8 inches thick before compaction, and provide proper moisture content for the required degree of compaction.

D.2 Compact each layer to 95% relative density, as determined by CALTRANS Sec 19, Test 216 or 231.

E. Install culvert markers at locations shown on the drawings in accordance with the details and Sec 56 of CALTRANS.

END OF SECTION

SECTION 02936 — SEEDING

PART 1 GENERAL

1.01 SECTION INCLUDES

A. Preparation and placing of subsoil

B. Seeding

C. Maintenance

1.02 RELATED SECTIONS

Not Applicable

1.03 DEFINITIONS

Weeds: Includes Dandelion, Jimsonweed, Quackgrass, Horsetail, Morning Glory, Rush Grass, Mustard, Lambsquarter, Chickweed, Cress, Crabgrass, Canadian Thistle, Nutgrass, Poison Oak, Blackberry, Tansy Ragwort, Bermuda Grass, Johnson Grass, Poison Ivy, Nut Sedge, Nimble Will, Bindweed, Bent Grass, Wild Garlic, Perenial Sorrel, and Brome Grass.

1.04 SUBMITTALS

A. Submit product data, samples, test data, and maintenance data under provisions of section 01300 “Submittals.”

B. Product Data: Manufacturer's data for each product proposed.

C. Samples: A sample of proposed topsoil at least 10 oz in weight to the testing laboratory in sealed containers to prevent contamination.

D. Test Data: Results of source quality control testing.

E. Maintenance Data: Include maintenance instructions, cutting method, and maximum grass height

1.05 QUALITY ASSURANCE

A. Material Certification: Provide seed mixture in containers showing percentage of seed mix, year of production, net weight, date of packaging, and location of packaging.

B. Regulatory Requirements: Comply with regulatory agencies for [fertilizer and] herbicide composition.

1.06 DELIVERY, STORAGE, AND HANDLING

A. Deliver, store, and protect products under provisions of section 01620 "Storage and Protection."

B. Deliver grass seed mixture in sealed containers. Seed in damaged packaging is not acceptable.

1.07 MAINTENANCE SERVICE (NOT APPLICABLE)

PART 2 PRODUCTS

2.01 SEED MIXTURE

Seed Mixture:

Site300 Seed Mixture

Species	Bulk lbs/acre	P/G
Elymus X *Triticum*, regreen	24	95/85
Vulpia microstachys, three weeks fescue	6	
Elymus glaucus, blue wild-rye	6	90/75
Nassella pulchra, purple needlegrass	4	90/70
Melica californica, California oniongrass	3	80/80
Artemisia californica, California sage (bush)	3	10/50
Salvia mellifera, black sage (bush)	3	60/40
Baccharis piluaris, coyote bush	4	2/40
Poa scabarella/scunda, native pine bluegrass	3	90/70
Trifolium tridentatum, tom cat clover (herb)	2	95/75

Any deviations from this mix must be approved by a LLNL biologist.

2.03 ACCESSORIES

A. Mulching Material: Oat or wheat straw, free from weeds, foreign matter detrimental to plant life, and dry. Hay or chopped cornstalks are [not] acceptable.

B. Water: Clean, fresh, and free of substances or matter that could inhibit vigorous growth of grass.

C. Erosion Fabric: Curlex I Blanket

D. Herbicide: Not Applicable.

E. Stakes: Softwood lumber, chisel pointed.

F. String: Inorganic fiber.

PART 3 EXECUTION

3.01 EXAMINATION

A. Verify that prepared soil base is ready to receive the work of this section.

B. Beginning of installation means acceptance of existing site conditions.

3.02 SEEDING

A. Sow seed at the rate prescribed by the seed manufacturer to obtain complete coverage when germinated. Use a landscape industry-approved seeder, sowing half of the amount in each direction during a windless period. Do not sow immediately following rain or when ground is too dry. Do not seed area in excess of that which can be mulched on same day.

B. Immediately following seeding, apply mulch to a thickness of 1/8 inch.

C. Sowing should be completed in late September or October. Apply water with a fine spray immediately after each area has been mulched. Saturate to 4 inches of soil.

3.03 HYDROSEEDING

A. All hydroseeding equipment must be rinsed thoroughly and be free of any seeds from previous jobs prior to being brought to Site 300.

B. As seeds applied during the dry season are more likely to be eaten by birds and rodents, hydroseeding should be completed in late September or October.

C. Apply seeded slurry at the rate prescribed by the seed manufacturer to obtain complete coverage when germinated. Sow half of the amount evenly in two intersecting directions, with a hydraulic seeder. Do not apply on windy days, immediately after a rain, or when the ground is too dry. Do not hydroseed area in excess of that which can be mulched on same day.

D. Immediately following seeding, apply mulch to a thickness of 1/8 inch. Maintain clear of shrubs and trees.

E. Apply water with a fine spray immediately after each area has been mulched. Saturate to 4 inches.

3.04 SEED PROTECTION

A. Protect seeded areas by erecting fences, barriers, and signs necessary to prevent trespass. Barriers shall be neat and well maintained.

B. Cover seeded slopes with erosion fabric where grade is 4 inches per foot (1:3) or greater. Roll fabric onto slopes without stretching or pulling.

C. Lay fabric smoothly on surface. Bury top end of each section in 6 inches deep excavated topsoil trench. Provide 12 inch overlap of adjacent rolls. Backfill trench and rake smooth, level with adjacent soil.

D. Secure outside edges and overlaps at 36 inch intervals with stakes.

E. Lightly dress slopes with topsoil to ensure close contact between fabric and soil.

F. At sides of ditches, lay fabric laps in direction of water flow. Lap ends and edges at least 6 inches.

3.05 MAINTENANCE

A. Water to prevent grass and soil from drying out.

B. Roll surface to remove minor depressions or irregularities.

C. Control growth of weeds. Apply herbicides in accordance with manufacturer's instructions. Remedy damage resulting from improper use of herbicides.

D. Immediately reseed areas that show bare spots.

E. Protect seeded areas with warning signs during maintenance period.

END OF SECTION

SECTION 02950 — PLANTS AND GROUND COVER

PART 1 GENERAL

1.01 SECTION INCLUDES

A. Plants and ground cover

B. Finish grading

C. Planting and staking

D. Cleanup and maintenance

E. Pre-emergence weed control

1.02 RELATED SECTIONS

A. Section 02513 "Asphaltic Concrete Paving"

B. Section 03001 "Concrete"

1.03 REFERENCES

A The following documents form a part of these specifications to the extent stated herein.

B State of California, Department of Agriculture (DOA)

B.1 DOA Grading Code of Nursery Stock

C University of California, Division of Agricultural Sciences

C.1 An Annotated Checklist of Woody Ornamental Plants of California, Oregon and Washington, (Number 4091)

D. Cornell University, Bailey Hortorium

D.1 Hortus III (1976 edition)

1.04 SUBMITTALS

A. Submit soil test information, samples, maintenance schedule, and warranty documentation under provisions of section 01300 “Submittals.”

B. Soil Test: (NOT APPLICABLE)

B.1 After completion of the rough grading and prior to top soil preparation, obtain agronomic soil test for all planting areas. A minimum of one sample per two acres of planting area is required. Tests shall be performed by an accredited soils testing laboratory and shall include a fertility and suitability analysis with written recommendation for soil amendment, fertilizer, and chemical conditioner, application rates for soil preparation, auger hole requirements, and a post-maintenance fertilization program.

B.2 The soils report recommendations shall take precedence over the minimum amendment and fertilizer application rates specified on the plans only when they exceed the specified minimums. Additional materials required by the soils report shall be paid for by change order in accordance with section 01035 "Change Order Procedures."

B.3 Submit the name, address, and phone number of the consulting soil testing laboratory for approval to the University Representative prior to obtaining services.

C. Samples:

C.1 Soil amendments with a laboratory organic, amendment analysis within two weeks of award of subcontract. The analysis report shall include pH, salinity, particle size ratios, nitrogen content, iron content, and other information to show compatibility with the soils report.

C.2 10-pound sample of imported fill to testing laboratory, in airtight containers. Disregard sample submission if recent test results are available for type of fill.

D. Maintenance Schedule: Refer to subpart 1.10.

E. Warranty Documentation: Documentation of warranty required under subpart 1.09 of this section.

1.05 QUALITY ASSURANCE

Perform work with personnel experienced in the work required of this section under direction of a skilled foreman.

1.06 DELIVERY, STORAGE, AND HANDLING

A. Deliver plant materials to the site in accordance with section 01620 "Storage and Protection" and immediately prior to placement.

B. Keep plant materials moist, protect plants from sun and wind on the site and in transit, and adequately water on the site until planted.

1.07 SITE RESTRICTIONS

A. Utility Lines: Do not install trees within 10 feet of any underground utility lines, unless root control barrier, as specified, is installed along with trees.

B. Lights: Do not install trees within 10 feet of exterior pole lighting.

1.08 SEQUENCING AND SCHEDULING

A. Acceptance: Do not install plant materials prior to acceptance of finish grades and roadside ditch trenching.

1.09 WARRANTY (NOT APPLICABLE)

A. Upon final acceptance, warranty all plants against any defects for one growing season. Warranty period shall start from the time of planting. Replace all dead plants and plants not in a vigorous growth condition, as directed by the University. Plants used for replacement shall be of the same kind and size as specified.

B. Warranty all plants in areas receiving pre-emergence weed control treatment for 90 calendar days after final acceptance.

1.10 MAINTENANCE

A. General Requirements:

A.1. Protect all areas against damage, including erosion and trespass, and provide proper safeguards. Maintain and keep in good repair all temporary barriers erected to prevent trespass.

A.2. Repair all damaged planted areas, and replace plants with new stock of same size and specie as specified, immediately upon discovery of damage or loss.

A.3. Check all barriers and temporary fencing daily during the work week, and repair or replace damaged material immediately.

A45. Maintain adequate moisture depth in soil to ensure vigorous growth.

PART 2 PRODUCTS

2.01 MATERIALS

A. Ground Cover: Quality and size shall conform to the State of California Grading Code of Nursery Stock, No. 1 grade. Use only nursery-grown stock. Obtain University approval of plants prior to any installation.

A.1 Inspect plant materials, as required by the California State Department of Agriculture, before and during the progress of the work for size, variety, conditions, latent defects, and injuries. Remove rejected plants from the site immediately.

A.2 Plant label shall identify each specie and variety. Substitutions are not desired. Requests for substitutions shall be made no later than 15 days after the Notice to Proceed.

A.3 Provide quantities necessary to complete the work as shown in detail on the drawings.

B. Topsoil: Topsoil will be available for excavation in area designated by the University.

C. Sediment Control: Nedia Enterprises 12” Coconut Fiber KoirLog should be used at the toe of hills near swales to limit sediment buildup within the swale.

2.02 PRE-EMERGENCE WEED CONTROL TREATMENT

Pre-emergence weed control: Rhone-Poulenc Chemical Co., "Chipco Ronstar G," Dow Elanco "Surflan," or equal.

2.03 ACCESSORIES

A. Wrapping Materials: Quality burlap.

B. Support Stakes: As indicated in detail on the drawings.

PART 3 EXECUTION

3.01 PREPARATION

A. Verify that topsoil is ready to receive the work of this section.

B. Prepare topsoil to receive plant materials.

3.02 INSTALLATION

A. Plant Pits: As indicated in detail on the drawings.

B. Backfill plant holes with finely divided loose soil, free from rocks, clods, or lumpy material.

C. Backfill Mix:

C.1 After planting holes have been drilled, thoroughly mix soil removed with one part soil amendment to one part topsoil.

C.2 If excavated material is excessively rocky, use site topsoil in backfill mixture.

C.3 Backfill about one third of hole with mix.

D. Set plants in backfill mixture, in flat bottom holes, to such depth that the root crown will be 2 inches above finished grade. Water before adding remainder of backfill. Backfill rest of hole and soak thoroughly.

E. Water backfill until saturated to the full depth of the hole.

F. Nedia KoirLogs should be installed as specified in the product data sheet.

3.03 GROUND COVER PLANTING

A. Scarify planting areas and completely break up soil to a depth of 6 inches.

B. Keep planting material adequately watered in the container prior to planting.

C. Plant ground cover plants in evenly spaced rows with staggered spacing at intervals indicated on the drawings. Water immediately after planting and in sufficient quantity to saturate the soil around and below plants to depth of 8 inches.

3.04 PRE-EMERGENCE WEED CONTROL TREATMENT (NOT APPLICABLE)

A. Apply pre-emergence weed control treatment to all ground cover and shrub planting areas no later than two weeks after planting.

B. Apply at the rate specified by the manufacturer.

C. Check the phytotoxicity of materials used with the ground cover or shrubs to be treated. Do not use incompatible materials.

D. Remove by hand any weeds escaping the pre-emergence treatment within the maintenance period. Take care to prevent disturbing the plant material.

3.05 CLEANUP

A. Completely clean the work area before the preliminary inspection. Remove from the work area all cans, rocks, debris, and other foreign material resulting from work of this section.

B. Maintain this condition of cleanliness, to the satisfaction of the University, throughout the maintenance period.

3.06 PRELIMINARY INSPECTION

Upon completion of all planting and cleanup work, request a preliminary inspection. Completion of all corrective work, inspections, and approval of the work shall establish the basis for final planting inspection.

3.07 FINAL PLANTING INSPECTION AND ACCEPTANCE

Prior to final inspection, weed and rake all planting areas. Repair plant basins and clear the work site of all debris. Present the work of this section in a neat, orderly fashion. All plant stakes shall be plumb.

END OF SECTION

SECTION 03100 — CONCRETE FORMWORK

PART 1 GENERAL

1.01 SECTION INCLUDES

A. Formwork for cast-in-place concrete, with shoring, bracing, and anchorage.

B. Openings for other affected work.

C. Form accessories.

D. Stripping forms.

1.02 RELATED SECTIONS

A. Section 03300 “Cast-In-Place Concrete”

1.03 REFERENCES

A. The following documents form a part of these specifications to the extent stated herein.

B. American Concrete Institute (ACI)

B.1 ACI 301 Structural Concrete for Buildings

B.2 ACI 347 Concrete Formwork

C. National Institute of Standards and Technology (NIST)

C.1 NIST PS 1 Softwood Plywood, Construction and Industrial

1.04 SYSTEM DESCRIPTION

Design, engineer, and construct formwork, shoring, and bracing to meet design requirements, so that resultant concrete conforms to required shapes, lines, and dimensions.

1.05 QUALITY ASSURANCE

Construct and erect concrete formwork in accordance with ACI 301.

1.06 REGULATORY REQUIREMENTS

Conform to and comply with State of California Standards.

1.07 DELIVERY, STORAGE, AND HANDLING

A. Deliver, store, and handle materials in accordance with section 01620 “Storage and Protection.”

B. Deliver form materials in manufacturer's packaging with installation instructions.

C. Store off ground in ventilated and protected area to prevent deterioration from moisture or damage.

PART 2 PRODUCTS

2.01 FORM MATERIALS

A. Form Materials: At the discretion of the Contractor.

2.02 FORMWORK ACCESSORIES

A. Formwork Accessories: At the discretion of the Contractor.

B. Form Release Agent: Colorless material that will not stain concrete, absorb moisture, or impair natural bonding or color characteristics of coating intended for use on concrete.

C. Fillets for Chamfered Corners: Form external corners with ¾-inch chamfer.

D. Nails, Spikes, Lag Bolts, Through Bolts, Anchorages: Sized as required; of strength and character to maintain formwork in place while placing concrete.

PART 3 EXECUTION

3.01 INSPECTION

Verify lines, levels, and measurements before proceeding with formwork.

3.02 PREPARATION

A. Earth forms not permitted.

3.03 ERECTION

A. Provide bracing to ensure stability of formwork. Strengthen formwork liable to be overstressed by construction loads.

B. Provide temporary ports in formwork to facilitate cleaning and inspection. Locate openings at bottom of forms to allow flushing water to drain. Close ports with tight-fitting panels, flush with inside face of forms, neatly fitted so that joints will not be apparent in exposed concrete surfaces.

C. Provide chamfer strips on external corners.

D. Construct formwork to maintain tolerances in accordance with ACI 301.

3.04 APPLICATION OF FORM RELEASE AGENT

A. Apply form release agent on formwork in accordance with manufacturer's instructions. Apply prior to placing reinforcing steel, anchoring devices, and embedded items.

B. Soak contact surfaces of untreated forms with clean water. Keep surfaces wet prior to placing concrete.

3.05 FORM REMOVAL

A. Do not remove forms and bracing until concrete has sufficient strength to support its own weight and any construction and design loads that may be imposed upon it. Remove forms in accordance with ACI 347.

B. Remove formwork in same sequence as concrete placement to achieve similar concrete surface coloration.

C. Do not damage concrete surfaces during form removal.

3.06 CLEANING

A. Clean forms to remove foreign matter as erection proceeds.

B. Ensure that water and debris drain to exterior through clean-out ports.

C. Do not use water to clean out completed forms, unless formwork and construction proceed within heated enclosure. Use compressed air to remove foreign matter.

END OF SECTION

SECTION 03200 — CONCRETE REINFORCEMENT

PART 1 GENERAL

1.01 SECTION INCLUDES

A. Reinforcing steel bars.

1.02 RELATED SECTIONS

A. Section 03100 “Concrete Formwork”

B. Section 03300 “Cast-In-Place Concrete”

1.03 REFERENCES

A. The following documents form a part of these specifications to the extent stated herein

B. American Concrete Institute (ACI)

B.1	ACI 301	Structural Concrete for Buildings
B.2	ACI 315	Details and Detailing of Concrete Reinforcement

C. ASTM International (ASTM)

C.1	ASTM A 82	Cold Drawn Steel Wire for Concrete Reinforcement
C.2	ASTM A 185	Steel Welded Wire Fabric, Plain, for Concrete Reinforcement
C.3	ASTM A 497	Steel Welded, Wire Fabric, Deformed, for Concrete Reinforcement
C.4	ASTM A 615	Deformed and Plain Billet-Steel Bars for Concrete Reinforcement

D. American Welding Society (AWS)

D.1	AWS D1.4	Structural Welding Code-Reinforcing Steel

E. Concrete Reinforcing Steel Institute (CRSI)

E.1	CRSI DA4	Manual of Standard Practice
E.2	CRSI 63	Recommended Practice for Placing Reinforcing Bars
E.3	CRSI 65	Recommended Practice for Placing Bar Supports, Specifications

and Nomenclature

1.04 SUBMITTALS

A. Submit shop drawings in accordance with section 01300 “Submittals”.

B. Shop drawings: Indicate sizes, spacings, locations and quantities of reinforcing steel, bending and cutting schedules, splicing, stirrup spacing, supporting and spacing devices.

C. Prepare shop drawings under seal of a professional structural engineer registered in the State of California.

1.05 QUALITY ASSURANCE

A. Comply with ACI 301.

B. Perform work in accordance with State of California Standards.

PART 2 PRODUCTS

2.01 MATERIALS

A. Reinforcing Steel: ASTM A 615, 60 ksi yield grade billet-steel deformed bars, uncoated finish.

2.02 ACCESSORY MATERIALS

A. Chairs, Bolsters, Bar Supports, Spacers: Sized and shaped for strength and support of reinforcement during installation and placement of concrete.

2.03 FABRICATION

A. Fabricate in accordance with ACI 315, providing concrete cover specified in section 03300 “Cast-in-Place Concrete.”

B. Locate reinforcing splices not indicated on the drawings at points of minimum stress. Indicate location of splices on shop drawings.

C. Welding of reinforcing bars is not permitted.

PART 3 EXECUTION

3.01 INSTALLATION

A. Before placing concrete, clean reinforcement of foreign particles or coatings.

B. Concrete shall not be placed until all reinforcing has been in position and secured.

C. Place, support, and secure reinforcement against displacement. Do not deviate from alignment or measurement.

D. Flame cutting of reinforcing steel is not permitted.

F. Space reinforcing bars with minimum spacing in accordance with ACI 318 at one bar diameter but no less than one inch.

END OF SECTION

SECTION 03300 — CAST-IN-PLACE CONCRETE

PART 1 GENERAL

1.01 SECTION INCLUDES

A. Cast-in-place concrete for concrete members.

B. Slabs on fill.

C. Finishing

D. Curing

1.02 RELATED SECTIONS

A. Section 03100 "Concrete Formwork"

B. Section 03200 "Concrete Reinforcement"

1.03 REFERENCES

A. The following documents form a part of these specifications to the extent stated herein.

B. American Concrete Institute (ACI)

B.1	ACI 301	Structural Concrete
B.2	ACI 304R	Guide for Measuring, Mixing, Transporting and Placing Concrete
B.3	ACI 305R	Hot Weather Concreting
B.4	ACI 306R	Cold Weather Concreting
B.5	ACI 308	Standard Practice for Curing Concrete
B.6	ACI 318	Building Code Requirements for Structural Concrete

C. ASTM International (ASTM)

C.1	ASTM C 33	Concrete Aggregates
C.2	ASTM C 94	Ready-Mixed Concrete
C.3	ASTM C 150	Portland Cement

C.4	ASTM C 171	Sheet Materials for Curing Concrete
C.5	ASTM C 260	Air-Entraining Admixtures for Concrete
C.6	ASTM C 309	Liquid Membrane-Forming Compounds for Curing Concrete
C.7	ASTM C 494	Chemical Admixtures for Concrete
C.8	ASTM C 1107	Packaged Dry, Hydraulic Cement Grout (Nonshrink)
C.9	ASTM D 1751	Preformed Expansion Joint Filler for Concrete Paving and Structural Construction (Nonextruding and Resilient Bituminous Types)
C.10	ASTM D 1752	Preformed Sponge Rubber and Cork Expansion Joint Fillers for Concrete Paving and Structural Construction
C.11	ASTM D 2103	Polyethylene Film and Sheeting
C.12	ASTM E 1745	Water Vapor Retarders Used in Contact with Soil or Granular Fill Under Concrete Slabs

1.04 PERFORMANCE REQUIREMENTS

Beginning immediately after placement, protect concrete from premature drying, maintaining a minimum moisture loss at a relatively constant temperature for sufficient time to hydrate the cement and harden the concrete.

1.05 SUBMITTALS

A. Submit product data under the provisions of section 01300 “Submittals.”

B. Product Data:

B.1 Proposed mix design of each class of concrete to the testing laboratory for review prior to commencement of work.

B.2 Manufacturer’s product data for specified products; include installation instructions.

1.06 QUALITY ASSURANCE

A. Perform work in accordance with ACI 301.

B. Perform work in accordance with State of California Standards.

C. Obtain cement and aggregate from same source throughout the work.

C.1 Use specified concrete.

C.2 Obtain acceptance of surface finish.

PART 2 PRODUCTS

2.01 CONCRETE MATERIALS

A. Cement: ASTM C 150, moderate - type II, portland type; ASTM C150.

B. Fine and Coarse Aggregates: ASTM C 33.

B.1 Coarse Aggregate Maximum Size: In accordance with ACI 318.

C. Water: Clean and not detrimental to concrete.

2.02 ADMIXTURES

A. Air Entrainment: ASTM C 260.

2.03 ACCESSORIES

A. Bonding Agent: Epoxy type.

2.04 CURING MATERIALS

A. Water: Clean and not detrimental to concrete.

B. Membrane Curing Compound: ASTM C 309 type 1 clear, class B.

2.05 CONCRETE MIX

A. Mix and deliver concrete in accordance with ASTM C 94, Option C, except as otherwise provided in ACI 301.

B. Provide concrete for the following characteristics:

UNIT	*MEASUREMENT*
Compressive Strength (28 days)	4,000 psi
Water/Cement Ratio (maximum)	0.45 by weight (mass)
Aggregate Size (maximum)	1.5 inches

Slump	1 inch minimum; 4 inches maximum

C. Admixtures:

C.1 Add air-entraining agent to normal-weight concrete mix for concrete work exposed to exterior.

PART 3 EXECUTION

3.01 EXAMINATION

A. Verify requirements for concrete cover over reinforcement.

B. Verify that reinforcement and other items to be cast into concrete are accurately placed, held securely, and will not cause hardship in placing concrete.

C. By beginning the work of this section, Subcontractor indicates acceptance of existing conditions as suitable for receiving the work of this section, and warrants same in accordance with the provisions of preceding paragraphs of subpart 3.01.

3.02 PREPARATION

A. Prepare previously placed concrete by cleaning with steel brush and applying bonding agent. Apply bonding agent in accordance with manufacturer's instructions.

B. At locations where new concrete is dowelled to existing work, drill holes in existing concrete, insert steel dowels, and install using epoxy per manufacturer’s recommendations.

3.03 PLACING CONCRETE

A. Place concrete in accordance with ACI 301.

B. Ensure that reinforcement, inserts, embedded parts, and formed joints are not disturbed during concrete placement.

C. Maintain concrete cover around reinforcing in accordance with ACI 318 unless otherwise specified on plans.

D. Place concrete continuously between predetermined construction and control joints. Do not break or interrupt successive pours such that cold joints occur.

3.04 FINISHING

A. Provide formed concrete walls with smooth rubbed finish in accordance with ACI 301.

B. Finish slabs with floated finish in accordance with ACI 301.

3.05 PROTECTION

A. Immediately after placement, protect concrete from premature drying, excessively hot or cold temperatures, and mechanical injury.

3.06 CURING

A. Cure surfaces in accordance with ACI 301 with one of the methods stated in this section.

B. Membrane Curing Compound: Apply in accordance with manufacturers' instructions immediately after any water sheen, which may develop after finishing, has disappeared from the concrete surface.

C. Moisture Retaining Methods:

C.1 Ponding: Maintain continuous 100% water coverage over concrete surfaces not in contact with forms for 7 days.

C.2 Continuous Spraying: Spray water over concrete surfaces not in contact with forms; maintain wet for 7 days.

3.07 FIELD QUALITY CONTROL

A. The University will employ and pay for services of an independent testing laboratory to perform concrete inspection and testing in accordance with section 01400 "Quality Control."

B. Testing laboratory will take cylinders and perform slump [and air entrainment] tests in accordance with ACI 301; any rework shall be at Subcontractor's expense.

C. One slump test will be taken for each set of test cylinders taken.

3.08 PATCHING

A. Excessive honeycomb or embedded debris in concrete is not acceptable.

3.09 DEFECTIVE CONCRETE

A. Defective Concrete: Concrete not conforming to required lines, details, dimensions, tolerances, or specified requirements.

B. Repair or replacement of defective concrete will be determined by the Engineer.

END OF SECTION

ATTACHMENT 1:

Product Data

Permeable Nonwoven Fabric

PRODUCT DATA SHEET

GEOTEX® 801

GEOTEX 801 is a polypropylene, staple fiber, needlepunched nonwoven geotextile produced by Propex, and will meet the following Minimum Average Roll Values (MARV) when tested in accordance with the methods listed below. The fibers are needled to form a stable network that retains dimensional stability relative to each other. The geotextile is resistant to ultraviolet degradation and to biological and chemical environments normally found in soils.

GEOTEX 801 conforms to the property values listed below.[1] Propex performs internal Manufacturing Quality Control (MQC) tests that have been accredited by the Geosynthetic Accreditation Institute – Laboratory Accreditation Program (GAI-LAP).

		MARV[2]	
PROPERTY	**TEST METHOD**	**ENGLISH**	**METRIC**
Mechanical			
Tensile Strength (Grab)	ASTM D-4632	205 lbs	912 N
Elongation	ASTM D-4632	50%	50%
Puncture	ASTM D-4833	110 lbs	490 N
CBR Puncture	ASTM D-6241	525 lbs	2335 N
Mullen Burst	ASTM D-3786	350 psi	2413 kPa
Trapezoidal Tear	ASTM D-4533	85 lbs	378 N
Endurance			
UV Resistance	ASTM D-4355	70%	70%
Hydraulic			
Apparent Opening Size (AOS)[3]	ASTM D-4751	80 US Std. Sieve	0.180 mm
Permittivity	ASTM D-4491	1.50 sec^{-1}	1.50 sec^{-1}
Water Flow Rate	ASTM D-4491	110 gpm/ft^2	4480 $l/min/m^2$
Roll Sizes		12.5 ft x 360 ft 15 ft x 300 ft	3.81 m x 109.8 m 4.57 m x 91.5 m

NOTES:

1. The property values listed above are effective 08/2006 and are subject to change without notice.
2. Values shown are in weaker principal direction. Minimum average roll values (MARV) are calculated as the typical minus two standard deviations. Statistically, it yields a 97.7% degree of confidence that any samples taken from quality assurance testing will exceed the value reported.
3. Maximum average roll value.

PROPEX GEOSYNTHETICS | THE ADVANTAGE CREATORS.™

Propex Inc.
6025 Lee Highway, Suite 425
PO Box 22788
Chattanooga, TN 37422

PH: 423 899 0444
PH: 800 621 1273
FAX: 423 899 7619
www.geotextile.com

Geotex®, Landlok®, Pyramat®, X3®, SuperGro®, Petromat® and Petrotac® are registered trademarks of Propex Inc.
THIS PUBLICATION SHOULD NOT BE CONSTRUED AS ENGINEERING ADVICE. WHILE INFORMATION CONTAINED IN THIS PUBLICATION IS ACCURATE TO THE BEST OF OUR KNOWLEDGE, PROPEX DOES NOT WARRANT ITS ACCURACY OR COMPLETENESS. THE ULTIMATE CUSTOMER AND USER OF THE PRODUCTS SHOULD ASSUME SOLE RESPONSIBILITY FOR THE FINAL DETERMINATION OF THE SUITABILITY OF THE INFORMATION AND THE PRODUCTS FOR THE CONTEMPLATED AND ACTUAL USE. THE ONLY WARRANTY MADE BY PROPEX FOR ITS PRODUCTS IS SET FORTH IN OUR PRODUCT DATA SHEETS FOR THE PRODUCT, OR SUCH OTHER WRITTEN WARRANTY AS MAY BE AGREED BY PROPEX AND INDIVIDUAL CUSTOMERS. **PROPEX SPECIFICALLY DISCLAIMS ALL OTHER WARRANTIES, EXPRESS OR IMPLIED, INCLUDING WITHOUT LIMITATION, WARRANTIES OF MERCHANTABILITY OR FITNESS FOR A PARTICULAR PURPOSE, OR ARISING FROM PROVISION OF SAMPLES, A COURSE OF DEALING OR USAGE OF TRADE.**

©2006 Propex Inc.

INSTALLATION GUIDELINES

SEPARATION/STABILIZATION GEOTEXTILE FABRICS

INTRODUCTION

Propex's Geotex® family of geotextiles can enhance the performance of paved and unpaved roadways, parking lots, airports, loading docks, and storage areas through separation/stabilization of the roadway structure. The geotextiles provide three important functions: separation/stabilization, drainage, and reinforcement. The fabric serves as a permeable separation/stabilization layer, preventing the aggregate and subgrade soils from intermixing while allowing the passage of water. The geotextile also enhances the structural properties of the subgrade and the roadway aggregate to minimize the cost of the road structure.

The successful use of geotextiles in these applications requires proper installation. The four basic steps of proper installation include:

- Subgrade preparation
- Geotextile placement
- Aggregate placement
- Aggregate compaction

Geotex stabilization geotextiles can be used in most weather and temperature conditions.

Adequate planning and preparation for each installation step will speed construction and ensure good performance.

These guidelines provide recommendations for installation of geotextiles in separation/stabilization applications.

The guidelines are intended to assist the contractor responsible for installation of the specified geotextile.

They are to be considered general guidelines, appropriate for common construction conditions. Specific site conditions, design requirements, or other variables may require modification to these guidelines.

Subgrade Preparation

Initially, the site should be cleared of tree stumps, large stones, and other sharp objects that could puncture the fabric. This step should be performed regardless of subgrade strength.

Roadway subgrade preparation typically involves removal of all vegetation, roots, and topsoil. Localized soft or otherwise unsuitable subgrade areas may be required to be excavated and backfilled with select material. In some very soft soil applications, it is beneficial to leave vegetation, roots, and topsoil in place to limit subgrade soil disturbance and loss of strength.

Geotextile Placement

Two people can easily place Geotex® separation/stabilization geotextiles. The fabric should be rolled out onto the subgrade beginning at a point that allows easy access for construction equipment yet is consistent with the layout plan. On very soft subgrades (CBR<I) the fabric layout and aggregate placement should begin on firm soil on the site perimeter, to establish an "anchor point." From there the fabric can be rolled onto softer sections. The geotextile should not be dragged across the subgrade. The geotextile is usually laid in the direction of construction traffic; however, specific project dimensions may alter this layout. Geotextile panels should be overlapped both side-to-side and end-to-end, in the direction of aggregate placement. The recommended overlap ranges from 1.5 to 3 feet, depending on subgrade strength. Overlap recommendations are provided in Table 1.

Table 1. Recommended Geotextile Overlaps

Subgrade CBR Value	Subgrade R-Value (California)	Subgrade Shear Strength (lb/in²)	Field Estimation of CBR	Recommended Minimum Overlap
< 0.5	_____	≤ 2	_____	Sewn seam required
> 0.5 to 1	_____	> 2 to 4.5	A person can easily walk on the site	3 ft.
> 1 to 2	> 0 to 10	> 4.5 to 8.5	A low ground pressure bulldozer can access the site without significant rutting	2.5 ft.
> 2	> 10	> 8.5	A D4 bulldozer can access the site without significant rutting	1.5 ft.

Alternatively, adjacent fabric edges can be sewn together rather than overlapped. Sewn seams must be used when the geotextile provides significant tensile reinforcement. This is the case, for example, when the subgrade is very soft (CBR<0.5). Sewn seam strength and fabric orientation are important design parameters. In these critical applications, adjacent panels must be placed and sewn in accordance with the specifications provided by the design engineer. Field sewing is performed using a portable sewing machine and typically requires three or four laborers. Presewn panels can be supplied from the factory. Propex Engineering Bulletin No. 611, “Geotextile Sewn Seams,” provides detailed information on both field-sewn and factory-sewn seams.

Soil, rocks, or pins can be used to hold fabric edges and overlaps down until aggregate is placed. On curves, the geotextile may be folded or cut to conform to the curve, as shown in Figure 1. The fold or overlap should be in the direction of construction and can be held in place as described above.

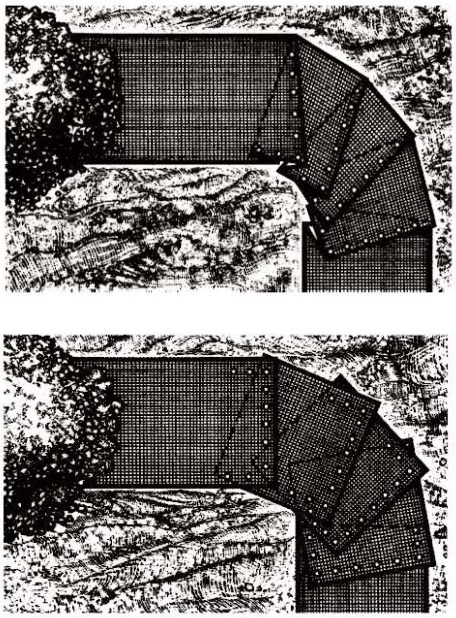

Figure 1 - Top, forming a curve using folds. Bottom, forming a curve using cut pieces.

Aggregate Placement

Aggregate is placed and spread on the fabric using conventional construction practices and equipment. Soil, rocks, or pins should be used to anchor the leading edge of the fabric to prevent it from lifting during placement of the first aggregate lift. The aggregate is typically back-dumped onto the geotextile, as the truck should not drive directly on the fabric. The aggregate is then spread over the geotextile. A tracked bulldozer is best used for this operation. Low ground pressure models are recommended for work on soft subgrades.

Lift thickness should not be less than 6 inches. The first lift should be as thick as necessary to limit rutting to less than 4 inches. During spreading, the bulldozer should blade into the load and slightly upward to prevent stressing the fabric. This procedure should be followed for each load until the fabric is completely covered. The dozer operator can determine which areas may need additional aggregate for good stability by observing aggregate layer rutting.

On very soft subgrades, care should be taken during aggregate placement to ensure that the fabric is not moved out of position nor the subgrade overstressed. Over some very soft soil conditions, "mud waves" may appear during or subsequent to aggregate placement. Mud waves result from overstressing the subgrade during fill placement, causing the subsurface soil to move away and up from the loaded area. They are normally not a problem if they do not heave above the surface of the aggregate base. If severe mud waves are anticipated, a Propex representative can provide information on construction procedures to minimize their adverse effects.

Sudden stops or turns by equipment operating over the geotextile should be avoided. Under typical conditions, vehicles should not be allowed to drive directly on the geotextile. If space constraints make this impractical, the possible damage from direct vehicle contact should be evaluated on a test section of the geotextile. If the fabric is damaged such that it cannot fulfill project requirements, a more damage-resistant geotextile should be specified. If the fabric is damaged during installation, the damaged section should be exposed and a patch of fabric placed over it. The patch should be large enough to overlap onto undamaged areas as recommended in Table 1. The aggregate is then replaced and compacted.

Aggregate Compaction

The aggregate must be compacted as required by the project specifications. The aggregate should be initially compacted by "walking" the tracked bulldozer back and forth over the aggregate while waiting for the next aggregate load. Construction traffic will then compact the aggregate until reasonable stability is obtained. Final compaction is achieved by rolling the area with a vibratory compactor, first without vibration for several passes and then with full vibration. Any weak areas found during final compaction usually indicate inadequate aggregate thickness in those locations. Do not grade ruts down; simply fill with additional aggregate and compact to the specified density. This also applies to any future rut maintenance that might be required.

Construction Monitoring

It is important that the construction conditions and process be monitored. If the actual subgrade has lower strength than that assumed for design, the structural section design thicknesses must be re-evaluated. Observation of rutting of the aggregate layer, for example, can pinpoint weak subgrade areas, allowing design adjustments to be made on site if necessary. One advantage of an unpaved road is the ability to identify and resurface weak areas to avoid overdesigning the entire road. Aggregate base placed for a new pavement may also be monitored for weak areas and corrected before the pavement layer(s) is placed.

PROPEX | THE ADVANTAGE CREATORS.™
GEOSYNTHETICS

6025 Lee Highway, Suite 425 PH: 423 899 0444
PO Box 22788 PH: 800 621 1273
Chattanooga, TN 37422 FAX: 423 899 7619

www.geotextile.com

Geotex®, Landlok®, Pyramat®, X3®, SuperGro®, Petromat® and Petrotac® are registered trademarks of Propex Inc.

THIS PUBLICATION SHOULD NOT BE CONSTRUED AS ENGINEERING ADVICE. WHILE INFORMATION CONTAINED IN THIS PUBLICATION IS ACCURATE TO THE BEST OF OUR KNOWLEDGE, PROPEX DOES NOT WARRANT ITS ACCURACY OR COMPLETENESS. THE ULTIMATE CUSTOMER AND USER OF THE PRODUCTS SHOULD ASSUME SOLE RESPONSIBILITY FOR THE FINAL DETERMINATION OF THE SUITABILITY OF THE INFORMATION AND THE PRODUCTS FOR THE CONTEMPLATED AND ACTUAL USE. THE ONLY WARRANTY MADE BY PROPEX FOR ITS PRODUCTS IS SET FORTH IN OUR PRODUCT DATA SHEETS FOR THE PRODUCT, OR SUCH OTHER WRITTEN WARRANTY AS MAY BE AGREED BY PROPEX AND INDIVIDUAL CUSTOMERS. PROPEX SPECIFICALLY DISCLAIMS ALL OTHER WARRANTIES, EXPRESS OR IMPLIED, INCLUDING WITHOUT LIMITATION, WARRANTIES OF MERCHANTABILITY OR FITNESS FOR A PARTICULAR PURPOSE, OR ARISING FROM PROVISION OF SAMPLES, A COURSE OF DEALING OR USAGE OF TRADE.

LL-529 © 2006 Propex Inc. 08/06

HDPE Liner

SMOOTH HDPE GEOMEMBRANE
ENGLISH UNITS

Property	Test Method	Minimum Average Values 30 mil	40 mil	60 mil	80 mil	100 mil
Thickness, mils	ASTM D 5199					
minimum average		30	40	60	80	100
lowest individual reading		27	36	54	72	90
Sheet Density, g/cc	ASTM D 1505/D 792	0.940	0.940	0.940	0.940	0.940
Tensile Properties[1]	ASTM D 6693					
1. Yield Strength, lb/in		63	84	126	168	210
2. Break Strength, lb/in		114	152	228	304	380
3. Yield Elongation, %		12	12	12	12	12
4. Break Elongation, %		700	700	700	700	700
Tear Resistance, lb	ASTM D 1004	21	28	42	56	70
Puncture Resistance, lb	ASTM D 4833	54	72	108	144	180
Stress Crack Resistance[2], hrs	ASTM D 5397 (App.)	300	300	300	300	300
Carbon Black Content[3], %	ASTM D 1603	2.0 - 3.0	2.0 - 3.0	2.0 - 3.0	2.0 - 3.0	2.0 - 3.0
Carbon Black Dispersion	ASTM D 5596			--Note 4--		
Oxidative Induction Time (OIT)						
Standard OIT, minutes	ASTM D 3895	100	100	100	100	100
Oven Aging at 85°C	ASTM D 5721					
High Pressure OIT - % retained after 90 days	ASTM D 5885	60	60	60	60	60
UV Resistance[5]	GRI GM11					
High Pressure OIT[6] - % retained after 1600 hrs	ASTM D 5885	50	50	50	50	50
Seam Properties	ASTM D 6392 (@ 2 in/min)					
1. Shear Strength, lb/in		57	80	120	160	200
2. Peel Strength, lb/in - Hot Wedge		45	60	91	121	151
- Extrusion Fillet		39	52	78	104	130
Roll Dimensions						
1. Width (feet):		23	23	23	23	23
2. Length (feet)		1000	750	500	375	300
3. Area (square feet):		23,000	17,250	11,500	8,625	6,900
4. Gross weight (pounds, approx.)		3,470	3,470	3,470	3,470	3,470

1 Machine direction (MD) and cross machine direction (XMD) average values should be on the basis of 5 test specimens each direction. Yield elongation is calculated using a gauge length of 1.3 inches; Break elongation is calculated using a gauge length of 2.0 inches.
2 The yield stress used to calculate the applied load for the SP-NCTL test should be the mean value via MQC testing.
3 Other methods such as ASTM D 4218 or microwave methods are acceptable if an appropriate correlation can be established.
4 Carbon black dispersion for 10 different views: Nine in Categories 1 and 2 with one allowed in Category 3.
5 The condition of the test should be 20 hr. UV cycle at 75°C followed by 4 hr. condensation at 60°C.
6 UV resistance is based on percent retained value regardless of the original HP-OIT value.

This data is provided for informational purposes only and is not intended as a warranty or guarantee. Poly-Flex, Inc. assumes no responsibility in connection with the use of this data. These values are subject to change without notice. REV. 11/06

1. Diameter	ASTM D 5199
2. Density	ASTM D 1505
3. Melt Index	ASTM D 1238
4. Carbon Black Content	ASTM D 1603

D. Reporting

Results from the testing shall be reviewed by the quality control manager. Material that does not meet specifications shall be identified and placed on hold. The test data shall then be transferred to the product data file for roll certification.

3. GEOMEMBRANE INSTALLATION

3.1 Materials Logistics

3.1.1 Transportation and On-site Storage

The geomembrane rolls shall be shipped by flatbed trailer to the job site. The geomembrane shall be stored so as to be protected from puncture, dirt, grease, moisture and excessive heat. Damaged material shall be stored separately for repair or replacement. The rolls shall be stored on a prepared smooth surface (not wooden pallets) and should not be stacked more than two rolls high.

3.2 Earthwork

3.2.1 General

The owner or his representative (soil quality assurance inspector) shall inspect the subgrade preparation. Prior to liner installation the subgrade shall be compacted in accordance with the project specifications. Weak or compressible areas which cannot be satisfactorily compacted should be removed and replaced with properly compacted fill. All surfaces to be lined shall be smooth, free of all foreign and organic material, sharp objects, or debris of any kind. The subgrade shall provide a firm, unyielding foundation with no sharp changes or abrupt breaks in grade. Standing water or excessive moisture shall not be allowed.

The installer, on a daily basis, shall approve the surface on which the geomembrane will be installed. After the supporting soil surface has been approved, it shall be the installer's responsibility to indicate to the inspector any changes to its condition that may require repair work.

3.2.2 Anchor Trench

The anchor trench shall be excavated to the line, grade, and width shown on the project construction drawings, prior to liner system placement. Slightly rounded corners shall be provided in the trench to avoid sharp bends in the geomembrane.

3.3 Method of Placement

The rolls shall be deployed using a spreader bar assembly attached to a loader bucket or by other methods approved by the project engineer.

The installer shall be responsible for the following:

1. Equipment or tools shall not damage the geomembrane during handling, transportation and deployment.
2. Personnel working on the geomembrane shall not smoke or wear damaging shoes.

3. The method used to unroll the panels shall not cause scratches or crimps in the geomembrane and shall not damage the supporting soil.
4. Adequate loading (e.g., sand bags or similar items that will not damage the geomembrane) shall be placed to prevent uplift by wind (in case of high winds, continuous loading is recommended along edges of panels to minimize risk of wind flow under the panels).

3.3.1 Weather Conditions

Geomembrane deployment shall proceed between ambient temperatures of 32° F and 104° F. Placement can precede below 32° F only after it has been verified by the inspector that the material can be seamed according to the specification. Geomembrane placement shall not be done during any precipitation, in the presence of excessive moisture (e.g., fog, rain, dew) or in the presence of excessive winds, as determined by the installation supervisor.

3.4 Field Seaming

Approved seaming processes are fusion and extrusion welding. On side slopes, seams shall be oriented in the general direction of maximum slope, i.e., oriented down, not across the slope. In corners and odd-shaped geometric locations, the number of field seams shall be minimized.

No base T-seam shall be closer than 5 feet from the toe of the slope. Seams shall be aligned with the least possible number of wrinkles and “fishmouths”. If a fishmouth or wrinkle is found, it shall be relieved and cap-stripped.

3.4.1 Seam Overlap

Geomembrane panels must have a finished minimum overlap of 4 inches for fusion welding and 6 inches for extrusion welding.

Cleaning solvents may not be used unless the product is approved by the liner manufacturer.

3.4.2 Test Seams

Field test seams shall be conducted on the liner to verify that seaming conditions are satisfactory. Test seams shall be conducted at the beginning of each seaming period and at least once every 4 hours, for each seaming apparatus and personnel used that day.

All test seams shall be made in contact with the subgrade. Welding rod used for extrusion welding shall have the same properties as the resin used to manufacture the geomembrane. The test seam samples shall be 10 feet long for fusion welding and 3 feet long for extrusion welding with the seam centered lengthwise. Three specimens shall be cut from each end of the test seams by the inspector. The inspector shall use a tensiometer to test 3 specimens for shear and 3 specimens for peel. Each specimen shall be one inch wide with a grip separation of 4 inches plus the width of the seam. The seam shall be centered between the clamps. The rate of grip separation shall be 2 inches per minute.

3.4.3 Assessment of Seam Test Results

For both smooth and textured seams the strength of two out of three 1.0 inch (25 mm) wide strip specimens should meet or exceed values given in this specification. The third must meet or exceed 80% of the given values. The shear percent elongation should exceed 50%. The assumed gauge length is considered to be the unseamed sheet material on either side of the welded area. Elongation measurements should be omitted for field testing. In addition, the peel separation should not exceed 25% based on the proportion of area of separated bond to the area of the original bonding. Regarding the locus-of-break patterns of the different seaming methods in shear and peel, the following are unacceptable break codes per their description in the ASTM D 6392. In this regard, SIP is an acceptable break code.

Unacceptable Break Codes

Hot Wedge: AD and AD-BRK > 25%

Extrusion Fillet: AD1, AD2 and AD-Weld (unless strength is achieved)

3.4.4 Non-Destructive Seam Testing

The installer shall non-destructively test all field seams over their full length.

A. Vacuum Box Testing

Equipment for testing extrusion seams shall be comprised of the following:

1. A vacuum box assembly consisting of a rigid housing, a transparent viewing window, a soft rubber gasket attached to the bottom, port hole or valve assembly, and a vacuum gauge.
2. Soapy solution in a plastic bucket with a mop.

The following procedures shall be followed by the installer:

1. Excess sheet overlap shall be trimmed away.
2. Wet a strip of geomembrane approximately 12 inches wide by the length of box with the soapy solution.
3. Place the box over the wetted area and compress.
4. Create a vacuum of 3 - 5 psi.
5. Ensure that a leak tight seal is created.
6. For a period of approximately 10 seconds, examine the geomembrane through the viewing window for the presence of animated soap bubbles.
7. If no animated bubbles appear after 10 seconds, close the vacuum valve and open the bleed valve, move the box over the next adjoining area with a minimum 3 inches overlap and repeat the process.
8. All areas where animated soap bubbles appear shall be marked, repaired and then retested.

The following procedures shall apply to locations where seams cannot be non-destructively tested.

1. If the seam is accessible to testing equipment prior to final installation, the seam shall be non-destructively tested prior to final installation.
2. If the seam cannot be tested prior to final installation, the seams shall be spark tested according to the spark tester manufacturer's procedures.

B. Air Pressure Testing (For Double Fusion Seams Only)

Equipment for testing double fusion seams shall be comprised of the following:

1. An air pump equipped with pressure gauge capable of generating and sustaining a pressure between 25 and 30 psi.
2. A pressure gauge equipped with a sharp hollow needle.

The following procedures shall be followed by the installer:

1. Seal one end of the seam to be tested.
2. Insert needle or other approved pressure feed device through the sealed end of the channel created by the double wedge fusion weld.
3. Energize the air pump to verify the unobstructed passage of air through the channel.
4. Seal the other end of the channel.

5. Energize the air pump to a pressure between 25 and 30 psi, close valve, allow 2 minutes for the injected air to come to equilibrium in the channel, and sustain pressure for approximately 5 minutes.
6. If loss of pressure exceeds 4 psi, or pressure does not stabilize, locate faulty area, repair and retest.
7. If pressure does not drop below the acceptable value after five minutes, cut the air channel open at the opposite end from the pressure gauge. The air channel should deflate immediately indicating that the entire length of the seam has been tested.

3.4.5 Destructive Seam Testing

Destructive seam testing should be minimized to preserve the integrity of the liner. The installer shall provide the inspector with one destructive test sample per project specifications (usually once per 500 feet of seam length) from a location specified by the inspector.

A. Sampling Procedure

In order to obtain test results prior to completion of liner installation, samples shall be cut by the installer as the seaming progresses. The installer shall also record the date, location, and pass or fail description. All holes in the geomembrane resulting from obtaining the seam samples shall be immediately patched and vacuum tested.

B. Size and Disposition of Samples

The samples shall be 12 inches wide by 36 inches long with the seam centered lengthwise. The sample shall be cut into three equal-length pieces, one to be given to the inspector, one to be given to the owner and one to the installer.

C. Field Laboratory Testing

The inspector shall test ten 1-inch wide specimens from his sample, five specimens for shear strength and five for peel strength.

D. Independent Laboratory Testing

The owner, at his discretion and expense, may send seam samples to a laboratory for testing. The test method and procedures to be used by the independent laboratory shall be the same as used in field testing.

E. Procedures for Destructive Test Failure

The following procedures shall apply whenever a sample fails the field destructive test:

1. The installer shall cap strip the seam between the failed location and any passed test locations.
2. The installer can retrace the welding path to an intermediate location (usually 10 feet from the location of the failed test), and take a sample for an additional field test. If this test passes, then the seam shall be cap stripped between that location and the original failed location. If the test fails, then the process is repeated.
3. Over the length of seam failure, the installer shall either cut out the old seam, reposition the panel and reseam, or add a cap strip.

3.4.6 Defects and Repairs

All seams and non-seam areas of the geomembrane shall be inspected by the inspector for defects, holes, blisters, undispersed raw materials, and any sign of contamination by foreign matter. The surface of the geomembrane shall be clean at the time of inspection.

A. Evaluation

Each suspect location in seam and non-seam areas shall be non-destructively tested as appropriate in the presence of the inspector. Each location that fails the non-destructive testing shall be marked by the inspector, and repaired accordingly.

B. Repair Procedures

1. Defective seams shall be cap stripped or replaced.
2. Small holes shall be repaired by extrusion welding a bead of extrudate over the hole. If the hole is larger than 1/4 inch, it shall be patched.
3. Tears shall be repaired by patching. If the tear is on a slope or an area susceptible to stress and has a sharp end it must be rounded prior to patching.
4. Blisters, large cuts and undispersed raw materials shall be repaired by patches.
5. Patches shall be completed by extrusion welding. The weld area shall be ground no more than 10 minutes prior to welding. No more than 10% of the thickness shall be removed by grinding. Welding shall commence where the grinding started and must overlap the previous seam by at least 2 inches. Reseaming over an existing seam without regrinding shall not be permitted. The welding shall restart by grinding the existing seam and rewelding a new seam.

   Patches shall be round or oval in shape, made of the same geomembrane, and extend a minimum of 6 inches beyond the edge of defects.

C. Verification of Repairs

Each repair shall be non-destructively tested. Repairs that pass the non-destructive test shall be taken as an indication of an adequate repair. Failed tests indicate that the repair shall be repeated and retested until passing test results are achieved.

The inspector shall keep daily documentation of all non-destructive and destructive testing. This documentation shall identify all seams that initially failed the test and include evidence that these seams were repaired and successfully retested.

3.5 Cover Material and Backfilling of Anchor Trench

The geomembrane shall be covered as soon as possible. The covering operation shall not damage the geomembrane. The cover soil material shall be free of foreign and organic material, sharp objects, or debris of any kind, which could potentially damage the geomembrane. No construction equipment or machinery shall operate directly on the geomembrane. The use of lightweight machinery (i.e., generator, etc.) with low ground pressure is allowed.

The anchor trench shall be backfilled by the earthwork contractor. Trench backfill material shall be placed and compacted in accordance with the project specifications.

Care shall be taken when backfilling the trenches to prevent any damage to the geomembrane. If damage occurs, it shall be repaired prior to backfilling.

3.6 Geomembrane Acceptance

The installer shall retain all ownership and responsibility for the geomembrane until accepted by the owner.

Final acceptance is when all of the following conditions are met:

1. Installation is finished.
2. Verification of the adequacy of all field seams and repairs, including associated testing, is complete.

Erosion Control Blanket

American Excelsior Company®
Earth Science Division

Product Description

Curlex® Blankets

Excelsior Erosion Control Blankets

American Excelsior Company is the inventor of biodegradable erosion control blankets. Developed in the early 60's, Curlex excelsior blankets are specifically designed to actually promote ideal growing conditions for grass seed, while simultaneously protecting topsoil from wind and water erosion. Curlex excelsior blankets have long passed the test of time. By design, Curlex blankets have a built-in swell factor - wet curled excelsior fibers sightly expand in thickness and interlock to form a strong, fiber matrix. This allows the fibers to provide intimate contact with local terrain. Water flow is trained to follow the curled fiber matrix. The roughness of the curled excelsior matrix slows the velocity to a point where gravity takes over, which allows moisture to slowly seep into the topsoil to promote ideal growing conditions.

Material Characteristics

Curlex blankets consist of unique softly barbed, interlocking, curled, Aspen excelsior fibers. They are weed seed free. Curlex blankets are available with a variety of environmentally sensitive and/or stronger netting types to match job site requirements. We offer a green color-coded plastic netting for applications requiring UV resistance strength and longevity. Our photodegradable Quick Mow™ netting is recommended for urban, golf course, and certain roadside projects. It is color coded (white) to identify it as a rapid break-down, polypropylene netting designed for use in areas to be mowed. Also available is our FibreNet™ - 100% biodegradable netting - for use in critical environmentally sensitive areas.

Most straight-line fiber blankets draw the line at 270 g/m^2 (.50 lb/yd^2), but not Curlex. At just under 400 g/m^2 (.75 lb/yd^2) Curlex blankets bring 50% more erosion control fibers to your job site. Curlex blankets are available in natural Aspen or QuickGRASS® (green). Combine that with a roll that's wider than conventional blankets and you have today's most effective and efficient multi-purpose biodegradable erosion control blanket. Curlex excelsior blankets are available individually wrapped or in master packs to allow for mechanical unloading and stacking.

Performance Capabilities

Channels
Shear Stress: 96 Pa (2 lb/ft^2)

Slopes
Steepness: Up to 1.5H:1V

Typical Applications

- Highway embankments, ditch bottoms and slopes, bridges, approaches and medians
- Residential, commercial, & industrial developments
- Urban drainage, stream banks, and waterways
- Golf course fairways, roughs, waterways, & drop structures
- Landfill caps, side slopes, and let down structures
- Pipeline right-of-ways

American Excelsior Company
Arlington, Texas (800) 777-SOIL • www.curlex.com

American Excelsior Company®
Earth Science Division

Curlex® Blankets

Excelsior Erosion Control Blankets

SUGGESTED SPECIFICATIONS

Curlex Single Net (Curlex I)

A specific cut of Great Lakes Aspen curled wood excelsior with 80% six-inch fibers or greater fiber length. It shall be of consistent thickness, with fibers evenly distributed throughout the entire area of the blanket. The top of each blanket shall be covered with photodegradable or biodegradable netting. Material does not contain any weed seed or chemical additives.

Specifications

Recommended Use:	Slopes to 2:1, Channel to 5 ft/s, shear stress to 1.55 lb/ft^2
Roll Sizes:	4' x 101.25' (45 yd^2), 8' x 101.25' (90 yd^2),12' x 101.25' (135 yd^2), 16' x 101.25' (180 yd^2)
Weight:	.73 lb/yd^2
Netting Options:	Green, Quick Mow White (90 day), FibreNet
Color:	Natural Aspen or QuickGRASS Green

Curlex Double Net (Curlex II)

A specific cut of Great Lakes Aspen curled wood excelsior with 80% six-inch fibers or greater fiber length. It shall be of consistent thickness, with fibers evenly distributed throughout the entire area of the blanket. The top and bottom of each blanket shall be covered with photodegradable or biodegradable netting. Material does not contain any weed seed or chemical additives.

Specifications

Recommended Use:	Slopes to 1.5:1, Channels to 7 ft/s, shear stress to1.75 lb/ft^2
Roll Sizes:	4' x 101.25' (45 yd^2), 8' x 101.25' (90 yd^2),12' x 101.25' (135 yd^2), 16' x 101.25' (180 yd^2)
Weight:	.73 lb/yd^2
Netting Options:	Green, Quick Mow White (90 day), FibreNet
Color:	Natural Aspen or QuickGRASS Green

Installation

Before installing Curlex blankets, the seed-bed shall be inspected by the Owner's Representative to ensure it has been properly compacted and fine graded to remove any existing rills. It shall be free of obstructions, such as tree roots, projections such as stones, and other foreign objects. Grass seed shall match soil conditions to allow for maximum germination, dense vegetation, and a structural root system. Contractor shall proceed when satisfactory conditions are present. After the area has been properly shaped, seeded, fertilized, and compacted, locate the start of the roll, making sure the roll is facing toward the area to be covered, and then roll out the blanket. Blankets shall be rolled out flat, even, and smooth without stretching the material then anchored to the subgrade.

Slopes: It is recommended that the blankets be installed in the same direction as the water flow. However, on short slopes it may be more practical to install horizontally across the width of the application, rather than vertically.If more than one width is required, simply abut the edges together and secure the blankets with a common row of biodegradable staples, steel staples, or stakes. Overlapping of Curlex Excelsior Blankets is not required or recommended. An exception is waterway slopes.

Channels: Curlex blankets shall be centered to offset a seam in the middle of the waterway. They shall be installed in the same direction as the water flow. The adjoining blankets shall be installed away from the center of channel and concentrated water flow. They shall be secured by a common row of staples. It is usually not necessary to overlap Curlex blankets. However, in waterway slopes a 2 inch ± shingle type installation shall be used to assure water flow is not able to undermine topsoil above the blankets. Curlex blanket installation should continue up the side slopes and over the crest 3' to the flat of the final grade to protect grass seed and topsoil during germination and vegetation/root system development stages. Flanks exposed to runoff, of sheet flow, must be protected by a check slot. Curlex Blankets shall be buried into the check slot, stapled, trench refilled and compacted.

Disclaimer: Curlex is a system for erosion control and re-vegetation on slopes and channels. American Excelsior Company (AEC) believes that the information contained herein to be reliable and accurate for use in erosion control and re-vegetation applications. However, since physical conditions vary from job site to job site and even within a given job site, AEC makes no performance guarantees and assumes no obligation or liability for the reliability or accuracy of information contained herein for the results, safety, or suitability of using Curlex, or for damages occurring in connection with the installation of any erosion control product whether or not made by AEC or its affiliates, except as separately and specifically made in writing by AEC. These specifications are subject to change without notice.

If you would like to receive more information or consult with one of our Customer Care Center Specialists, please call us toll free at (888-352-9582)

PDF download specifications available in the Technical Support Library at www.curlex.com

American Excelsior Company®
Earth Science Division

Proud Participant in NTPEP & Proud Member of:

CURLEX® I (.73) PRODUCT DATA SHEET

DESCRIPTION

Curlex I .73 erosion control blanket consists of a specific cut of 100% weed seed free Great Lakes Aspen curled wood excelsior with 80% six-inch fibers or greater fiber length. It is of consistent thickness with fibers evenly distributed throughout the entire area of the blanket. The top of each blanket is covered with photodegradable polypropylene netting. Curlex I .73 is also available as QuickGRASS® (Dyed Green), which increases the roll weight approximately four pounds per 45 yd^2 of blanket.

Curlex I .73 has a design C-factor (RUSLE Cover Management Factor) of .018 and is typically suitable for slopes up to 2:1. Curlex I .73 is rated for channel flows up to 5.0 ft/s (1.5 m/s) and 1.55 lb/ft^2 (74 Pa) shear stress.

PHYSICAL PROPERTIES

Curlex I .73 measurements at time of manufacturing:

Width	4.0 ft (1.2 m)	8.0 ft (2.4 m)	12.0 ft (3.7 m)	16.0 ft (4.9 m)
Length	101.25 ft (30.9 m)	101.25 ft (30.9 m)	101.25 ft (30.9 m)	101.25 ft (30.9 m)
Area	45.0 yd^2 (37.6 m^2)	90.0 yd^2 (75.3 m^2)	135.0 yd^2 (112.9 m^2)	180.0 yd^2 (150.5 m^2)
Weight	32.9 lb (14.9 kg)	65.7 lb (29.8 kg)	98.6 lb (44.7 kg)	131.4 lb (59.7 kg)
Fiber Count	≈7,000 per yd^2 (≈8,400 per m^2)	≈7,000 per yd^2 (≈8,400 per m^2)	≈7,000 per yd^2 (≈8,400 per m^2)	≈7,000 per yd^2 (≈8,400 per m^2)
Fiber Length (80% min.)	≥6.0 in (≥15.2 cm)	≥6.0 in (≥15.2 cm)	≥6.0 in (≥15.2 cm)	≥6.0 in (≥15.2 cm)
Mass per Unit Area (± 10%)	0.73 lb/yd^2 (0.40 kg/m^2)	0.73 lb/yd^2 (0.40 kg/m^2)	0.73 lb/yd^2 (0.40 kg/m^2)	0.73 lb/yd^2 (0.40 kg/m^2)
Net Openings	1.0 in x 2.0 in (25.4 mm x 50.8 mm)	1.0 in x 2.0 in (25.4 mm x 50.8 mm)	1.0 in x 2.0 in (25.4 mm x 50.8 mm)	1.0 in x 2.0 in (25.4 mm x 50.8 mm)

*TYPICAL INDEX VALUES

Index Property	Test Method	Value
Thickness	ASTM D 6525	0.36 in (9.14 mm)
Light Penetration	ECTC Procedure	50%
Resiliency	ASTM D 1777/ECTC	59%
Mass per Unit Area	ASTM D 5261/ECTC	0.75 lb/yd^2 (407 g/m^2)
MD-Tensile Strength Max.	ASTM D 6818	93.6 lb/ft (1.4 kN/m)
TD-Tensile Strength Max.	ASTM D 6818	43.2 lb/ft (0.6 kN/m)
MD-Elongation	ASTM D 5035/ECTC	37.7%
TD-Elongation	ASTM D 5035/ECTC	32.3%
Swell	ECTC Procedure	49%
Water Absorption	ASTM D 1117/ECTC	253%
Bench-Scale Rain Splash	ECTC Method 2	SLR = 3.6 @ 2 in/hr
Bench-Scale Rain Splash	ECTC Method 2	SLR = 6.0 @ 4 in/hr
Bench-Scale Rain Splash	ECTC Method 2	SLR = 9.9 @ 6 in/hr
Bench-Scale Shear	ECTC Method 3	2.0 lb/ft^2 @ 0.5" soil loss
Germination Improvement	ECTC Method 4	351%

*Index values may vary from measurements taken at time of manufacturing due to moisture losses or gains. SLR is the Soil Loss Ratio, as reported by NTPEP/AASHTO. Bench-scale index values should not be used for design purposes.

850 Avenue H East * Arlington, Texas 76011
Phone 1-800-777-SOIL * Fax 817-385-3585 * www.Curlex.com

American Excelsior Company®
Earth Science Division

Proud Participant in NTPEP & Proud Member of:

International Erosion Control Association

CURLEX® I (.73) MATERIAL SPECIFICATIONS

Materials:

Great Lakes Aspen Excelsior
Polypropylene Netting
Polypropylene Stitching Thread
QuickGRASS® (green excelsior – optional)

Roll Sizes:

Width:	4.0 ft (1.2 m)	8.0 ft (2.4 m)	12.0 ft (3.7 m)	16.0 ft (4.9 m)
Length:	101.25 ft (30.9 m)	101.25 ft (30.9 m)	101.25 ft (30.9 m)	101.25 ft (30.9 m)
Area:	45.0 yd^2 (37.6 m^2)	90.0 yd^2 (75.3 m^2)	135.0 yd^2 (112.9 m^2)	180.0 yd^2 (150.5 m^2)
Weight:	32.9 lb (14.9 kg)	65.7 lb (29.8 kg)	98.6 lb (44.7 kg)	131.4 lb (59.7 kg)

Description:

Curlex I erosion control blanket is a natural, stitched excelsior blanket that provides a temporary organic cover to reduce erosion, protect seeds, enhance germination, and hasten re-vegetation. Curlex I is furnished in rolls with polyethylene wrapping to protect against the elements prior to installation, and may be ordered in Master-Paks of nine rolls banded together to minimize material handling requirements. Curlex I .73 is also available as QuickGRASS® (Dyed Green), which increases the roll weight approximately four pounds per 45 yd^2 of blanket.

Curlex I has a design C-factor (RUSLE Cover Management Factor) of .018 and is typically suitable for slopes up to 2:1. Curlex I is rated for channel flows up to 5.0 ft/s (1.5 m/s) and 1.55 lb/ft^2 (74 Pa) shear stress.

Physical Properties:

Fiber:	Great Lakes Aspen Excelsior with no weed seeds Curled, interlocking fibers with barbed edges
Fiber Size:	80% of fibers a minimum of 6” (15.2 cm) long 0.038” ± 0.008” wide x 0.018” ± 0.003” thick (0.97 mm ± 0.20 mm wide x 0.46 mm ± 0.08 mm thick)
Unit Weight:	0.73 lb/yd^2 (0.40 kg/m^2) ± 10%
Thread Material:	HT Polypropylene with UV degrader additive
Thread Pattern:	4” wide x 4” long (10.2 cm x 10.2 cm) ± 0.50” (1.3 cm)
Net Material:	Polypropylene (green or white with UV degrader additive)
Net Openings:	1.0” wide x 2.0” long (25.4 mm wide x 50.8 mm long)
Net Configuration:	Top side only

All measurements are based on product at time of manufacture.

850 Avenue H East * Arlington, Texas 76011
Phone 1-800-777-SOIL * Fax 817-385-3585 * www.Curlex.com

American Excelsior Company®
Earth Science Division

Proud Participant in NTPEP & Proud Member of:

ECTC International Erosion Control Association ASTM International Member

Curlex® Staple Pattern Guide

For 8' wide Curlex Erosion Control Blankets

Adjust horizontal staple spacing for 4', 12', and 16' wide Curlex Erosion Control Blankets

Application	Slope			Channel
	≤ 4:1	≤ 3:1	≤ 1:1	≤6.0 lb/ft^2 (287 Pa) Shear Stress ≤10.0 ft/sec (3.0 m/sec) Velocity
Staple Pattern	A	B	C	C

● = Staple Placement

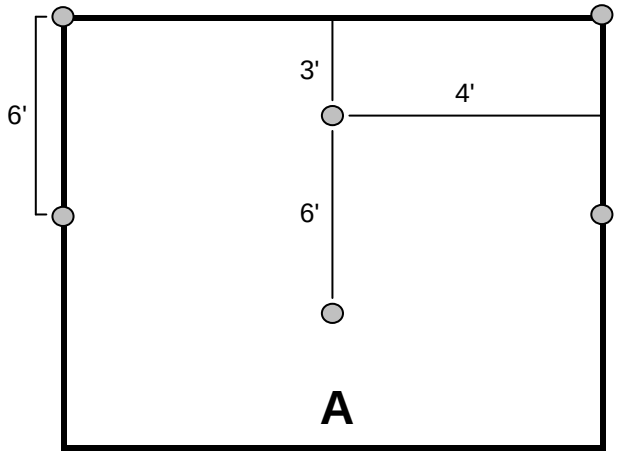

0.6 Staples/yd^2

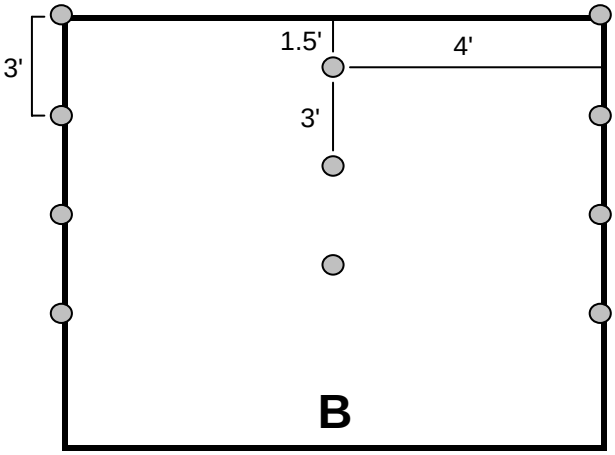

1.1 Staples/yd^2

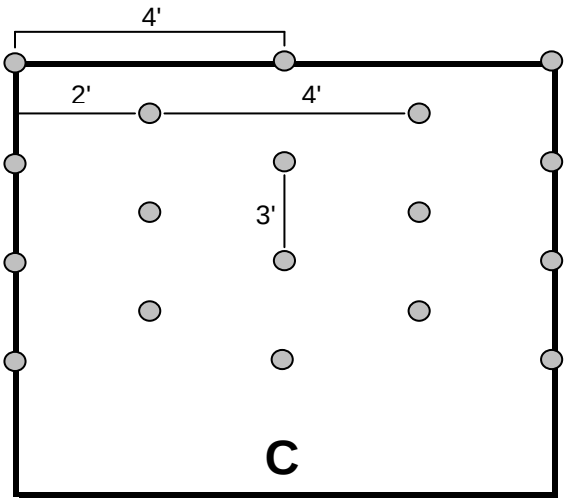

1.9 Staples/yd^2

Notes:

1. Recommended staples are a minimum 4" biodegradable E-Staple®, as provided by American Excelsior Company, or 6" wire for cohesive soils and 6" biodegradable E-Staple®, as provided by American Excelsior Company, or 8" wire for non-cohesive soils.

2. Adjust staple pattern so staples are placed in critical channel points (e.g. slope interface, channel bottom) as illustrated below:

Critical channel points are circled.

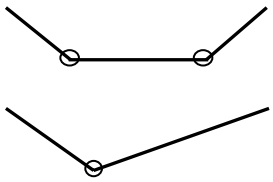

850 Avenue H East * Arlington, Texas 76011
Phone 1-800-777-SOIL * Fax 817-385-3585 * www.Curlex.com

Section 1 - CHEMICAL, PRODUCT AND COMPANY IDENTIFICATION

Manufacturer Information:
American Excelsior Company
P.O. Box 391
Rice Lake, WI 54868
Office Phone #: (715) 234-6861

Corporate Office:
American Excelsior Company
850 Avenue H East
Arlington, TX 76011
Office Phone #: (817) 385-3500

Chemical Name: Mixture
Synonyms: None
Internal Product Codes: 44,45,48
Product Use: Erosion control for construction

MSDS Origination Date: 11-21-95
Last Revision Date: 06-21-06

Section 2 - COMPOSITION / INFORMATION ON INGREDIENTS

Components	CAS Number	% Weight
Aspen Wood Excelsior	N/A	≈98
Polypropylene Netting	N/A	< 1
Polypropylene Thread	N/A	< 1

Component Information/Information on Non-Hazardous Components:
This product may be regulated, have exposure limits or other information identified as the following: Wood Dust, All Soft and Hard Woods.

Section 3 - HAZARDS IDENTIFICATION

Product Overview:
Product is a mat of wood excelsior covered or encased with a polypropylene netting. Excelsior is a slender, curved wood shaving that may contain wood dust. ***Under normal handling, storage, and application conditions overexposure to wood dust from this product is not anticipated.***

Potential Health Effects:

Eyes — Exposure to dusts may cause mechanical eye irritation.

Skin — Handling of product may cause mechanical skin irritation. Repeated skin contact may cause an allergic skin sensitization reaction.

Ingestion — Ingestion of this product is unlikely. If ingestion does occur, it may produce gastric irritation and discomfort.

Inhalation — ***Under normal use conditions, overexposure to wood dust is not anticipated.*** Inhalation of wood dusts may cause irritation and dryness of the respiratory system. Repeated inhalation exposure may cause an allergic respiratory sensitization reaction.

Section 4 - FIRST AID MEASURES

Eyes:	In case of contact, flush eyes with water for 15 minutes. Obtain medical attention if irritation persists.
Skin:	In case of contact, wash thoroughly with soap and large amounts of water. If irritation develops, get medical attention.
Ingestion:	Due to the physical nature of this material, ingestion is unlikely to occur. If ingestion does occur, seek medical attention.
Inhalation:	If respiratory irritation or other symptoms develop, seek medical attention.
Notes to Physician:	None.

Section 5 - FIRE FIGHTING MEASURES

Flash Point:	N/A
Method Used:	N/A
Upper Flammable Limit (UFL):	N/A
Lower Flammable Limit (LFL):	N/A
Auto Ignition:	N/A
Flammability Classification:	N/A
Rate of Burning:	Moderate to rapid

General Fire Hazards:
Product will ignite upon exposure to ignition source.

Hazardous Combustion Products:
Carbon monoxide, carbon dioxide, aldehydes, and various hydrocarbon fragments.

Extinguishing Media:
Water, dry chemical, or sand.

Fire Fighting Equipment/Instructions:
Fire fighters should wear full-face, self contained breathing apparatus and impervious protective clothing. Fire fighters should avoid inhaling any combustion products.

NFPA Ratings:	Health: 1, Fire: 1, Reactivity: 0, Other: 0
HMIS Ratings:	Health: 1, Fire: 1, Reactivity: 0, Personal Protection: N/A

Section 6 - ACCIDENTAL RELEASE MEASURES

Containment Procedures:	Contain by any means necessary.
Clean-Up Procedures:	Vacuum or sweep up material as necessary.
Evacuation Procedures:	Keep unnecessary people out of area.
Special Instructions:	Remove sources of ignition during cleanup.

Section 7 - HANDLING AND STORAGE

Procedures for Handling: Remove all sources of ignition when handling this product.

Recommended Storage Methods: Store in a cool, dry area away from moisture, excessive heat, and sources of ignition.

Section 8 - EXPOSURE CONTROLS / PERSONAL PROTECTION

Exposure Guidelines:

A. General Product Information
Keep formation of dust to a minimum.

B. Component Exposure Limits
Wood Dust, All Soft and Hard Woods. OSHA PEL: 5 mg/m^3 ; OSHA STEL: 10 mg/m^3

Engineering Controls:
Use as necessary to avoid contact with ignition sources.

Personal Protective Equipment:

Eye/Face: Wear safety glasses, goggles, or other appropriate eye/face protection.

Skin: Normal work clothing and gloves are recommended.

Respiratory: When necessary, appropriate NIOSH/MSHA approved respiratory protection should be used.

General: None.

Section 9 - PHYSICAL & CHEMICAL PROPERTIES

Appearance:	Wood fiber covered or encased with plastic mesh	**Odor**:	Mild
Physical State:	Solid	**pH**:	N/A
Vapor Pressure:	N/A	**Vapor Density**:	N/A
Boiling Point:	N/A	**Freezing Point**:	N/A

Section 10 - CHEMICAL STABILITY & REACTIVITY INFORMATION

Chemical Stability:	Stable.
Conditions to Avoid:	Avoid excessive heat and ignition sources.
Incompatibility:	Avoid contact with oxidizing agents and drying oils.
Hazardous Decomposition Products:	Carbon monoxide, carbon dioxide, aldehydes, and various hydrocarbon fragments.
Hazardous Polymerization:	Hazardous polymerization will not occur.

Section 11 - TOXICOLOGICAL INFORMATION

Acute Toxicity/Target Organ Information:

A. General Product/Component Information

Wood dusts are generally considered respiratory irritants and sensitizers. However, the ability of the dusts to cause sensitization reactions varies greatly with the species of wood. ***Under normal use conditions, overexposure to wood dust from this product is not anticipated.***

Epidemiology No data available for this product.

Carcinogenicity:

A. General Product/Component Information

There is some evidence that exposure to certain wood dusts may be associated with an increased risk of certain nasal cancers. However, that risk appears to vary greatly with the species of wood and the duration and extent of exposure. ***Under normal use conditions, overexposure to wood dust from this product is not anticipated.***

B. Component Carcinogenicity Listings

Not listed by ACGIH, IARC, NIOSH, NTP, or OSHA as a carcinogen.

Reproductive Toxicity: No data available for this product.

Neurotoxicity: No data available for this product.

Mutagenicity: No data available for this product.

Other Information: No data available for this product.

Section 12 - ECOLOGICAL INFORMATION

Ecotoxicity: No data available for this product.

Environmental Fate: 98% of product is composed of natural and biodegradable components.

Section 13 - DISPOSAL CONSIDERATIONS

US EPA Waste Number & Descriptions:

A. General Product Information

As shipped, not regulated as a hazardous waste.

B. Component Waste Numbers

No EPA Waste Numbers are applicable for this product's components.

Disposal Instructions:

Dispose of waste material in accordance with all applicable Federal, State, or provincial and local environmental regulations.

Section 14 - TRANSPORTATION INFORMATION

DOT Information:

Shipping Name:	Not regulated as a hazardous material
Hazard Class:	Not regulated
UN/NA #:	Not regulated
Packing Group:	Not regulated

Label(s) Required: None

Additional Shipping Information: None

International Transportation Regulations: Not regulated as dangerous goods

Section 15 - REGULATORY INFORMATION

US Federal Regulations:

A.	General Product Information	N/A
B.	Component Information	None of this product's components are listed under SARA Section 302 (40 CFR 355 Appendix A), SARA Section 313 (40 CFR 372.65), or CERCLA (40 CFR 302.4).

State Regulations:

A.	General Product Information	N/A
B.	Component Information	None of this product's components are listed on the state lists from CA, FL, MA, MN, NJ, or PA.

Other Regulations:

A.	General Product Information	N/A
B.	Component Information	None of the components are listed on the Canadian Controlled Product Ingredient Disclosure List.

Section 16 - OTHER INFORMATION

As the conditions of methods of use are beyond our control, American Excelsior Company does not assume any responsibility and expressly disclaims any liability for use of this material. Information contained herein is believed to be true and accurate, but all statements or suggestions are made without warranty, expressed or implied, regarding accuracy of the information, the hazards connected with the use of this material, or the results to be obtained thereof. Compliance with all federal, state, provincial, and local laws and regulations remains the responsibility of the user.

Key/Legend:

ACGIH	American Conference of Governmental Industrial Hygienists
CERCLA	Comprehensive Environment Response, Compensation, and Liability Act
CFR	Code of Federal Regulations
DOT	Department of Transportation
EPA	Environmental Protection Agency
HMIS	Hazard Materials Information System
IARC	International Agency for Research Cancer
mg/m^3	milligrams per cubic meter
MSHA	Mine Safety and Health Administration
N/A	Not Applicable or Not Available
NIOSH	National Institute of Occupational Safety and Health
NFPA	National Fire Protection Association
NTP	National Toxicology Program
OSHA	Occupational Safety and Health Administration
PEL	Permissible Exposure Limit
SARA	Superfund Amendments and Reauthorization Act
STEL	Short Term Exposure Limit

MSDS Contact: American Excelsior Company **Phone**: (817) 385-3500

Perforated Pipe and Fittings

TECHNICAL NOTE

Single Wall HDPE Perforation Patterns

TN 1.02
April 2007

Nominal I.D.		Perforation Type	Maximum Slot Length or Diameter		Maximum Slot Width		Minimum Inlet Area		Pattern Type
in	mm		in	mm	in	mm	in^2/ft	cm^2/m	
3	75	Slot	0.875	22	0.120	3	1.0	21	A
4	100	Slot	0.875	22	0.120	33	1.0	21	B
5	125	Slot	0.875	22	0.120	3	1.0	21	B
6	150	Slot	0.875	22	0.120	3	1.0	21	B
8	200	Slot	1.18	30	0.120	3	1.0	21	B
10	250	Slot	1.18	30	0.120	3	1.0	21	B
12	300	Slot	1.50	38	0.118	3	1.5	32	B
12	300	Circular	0.313	8	-	-	1.5	32	C
15	375	Circular	0.313	8	-	-	1.5	32	C
18	450	Circular	0.313	8	-	-	1.5	32	C
24	600	Circular	0.313	8	-	-	2.0	42	D

TYPE A PATTERN

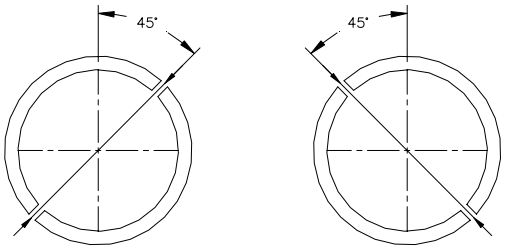

2 SLOT PATTERN
PERFORATIONS
ROTATED 90° EVERY
OTHER VALLEY

TYPE B PATTERN

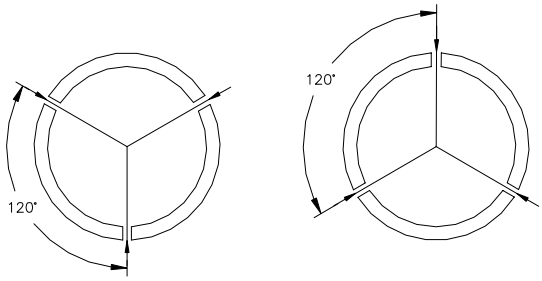

3 SLOT PATTERN
PERFORATIONS
ROTATED 60° EVERY
OTHER VALLEY

TYPE C PATTERN

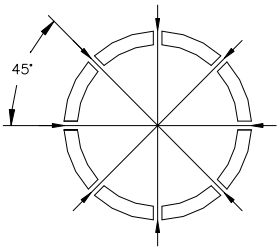

8 HOLE PATTERN

TYPE D PATTERN

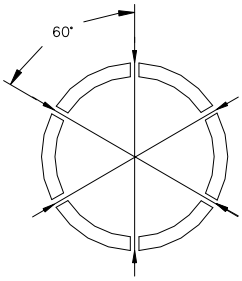

6 HOLE PATTERN

©ADS 2007

Product Note 3.116

Re: Singlewall Pipe Installation Guide
Date: July 1, 1995

Product Notes

ADS
ADVANCED DRAINAGE SYSTEMS, INC.

ADS corrugated polyethylene pipe is a flexible conduit, as is corrugated metal pipe. When properly installed, ADS culvert pipe has excellent load bearing strength. **To ensure maximum performance, ADS pipe should be installed in accordance with the following installation recommendations:**

1. Crushed stone, gravel or compacted soil backfill material should be used as the bedding and envelope material around the culvert. The aggregate size should not exceed 1/6 pipe diameter or 4" diameter, whichever is smaller.

2. The corrugated pipe should be laid on grade, on a layer of bedding material as shown for the two types of installations. If native soil is used as the bedding and backfill material, it should be well compacted in six inch layers under the haunches, around the sides and above the pipe to the recommended minimum height of cover.

3. Either flexible (asphalt) or rigid (concrete) pavements may be laid as part of the minimum cover requirements.

4. Site conditions and availability of bedding materials often dictate the type of installation method used.

5. The load bearing capability of flexible conduits is dependent on the type of backfill material used and the degree of compaction achieved. Crushed stone and gravel backfill materials typically reach a compaction level of 90-95% AASHTO standard density without compaction. When native soils are used as backfill material, a compaction level of 90% is required. This is the same minimum compaction that is recommended by all culvert pipe manufacturers and can be achieved by either hand or mechanical tamping.

Two types of installations are recommended for H-20 live loads -- the heaviest legal highway loads. These are the trench and open ditch installations. The minimum height of cover recommendations are the same for both conditions.

Trench Installation

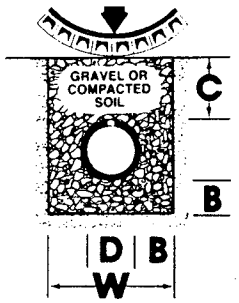

Open Ditch Installation

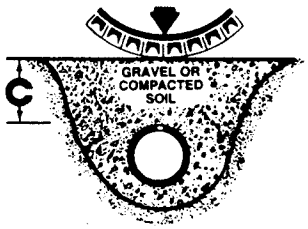

Minimum Dimensions -
Trench or Open Ditch Installations

Nominal Diameter D	Minimum Thickness B	Minimum Cover C	Min. Trench Width W
3"	4"	12"	20"
4"	4"	12"	21"
6"	4"	12"	23"
8"	4"	12"	25"
10"	4"	12"	28"
12"	5"	12"	31"
15"	5"	12"	34"
18"	6"	12"	39"
24"	6"	12"	48"

Note 1. ADS pipe also is recommended for residential driveway culverts and field crossings. Because these installations are not subject to repeated heavy truck traffic, the recommended compaction level is 85%. This compaction typically can be achieved by hand tamping the backfill material around the pipe. The minimum heights of cover for these installations are as listed in the above table.

Note 2. For more detailed installation data, contact the nearest ADS sales office.

Applicable Specifications and Installation Guidelines

1. ASTM F 405, Standard Specification for Corrugated Polyethylene Tubing and Fittings
2. ASTM F 667, Standard Specification for Large Diameter Corrugated Polyethylene Tubing and Fittings
3. AASHTO M 252, Standard Specification for Corrugated Polyethylene Drainage Tubing
4. AASHTO M 294, Standard Specification for Corrugated Polyethylene Pipe, 12" to 24" Diameter
5. ASTM D 2321, Standard Practice for Underground Installation of Thermoplastic Pipe for Sewers and Other Gravity-Flow Applications

SINGLE WALL WYES

PART #	PIPE SIZE	A	B	C	D	E
0322AA	3 in (75 mm)	10.50 in (267 mm)	4.00 in (102 mm)	7.00 in (178 mm)	6.38 in (162 mm)	8.38 in (213 mm)
0422AA	4 in (100 mm)	11.63 in (295 mm)	5.13 in (130 mm)	7.63 in (194 mm)	7.25 in (184 mm)	9.75 in (248 mm)
0522AA	5 in (125 mm)	13.63 in (346 mm)	6.25 in (159 mm)	9.25 in (235 mm)	8.75 in (222 mm)	11.88 in (302 mm)
0622AA	6 in (150 mm)	16.00 in (406 mm)	7.38 in (187 mm)	11.13 in (283 mm)	11.38 in (289 mm)	14.13 in (359 mm)
0822AA	8 in (200 mm)	19.25 in (489 mm)	10.00 in (254 mm)	13.50 in (343 mm)	14.88 in (378 mm)	18.75 in (476 mm)

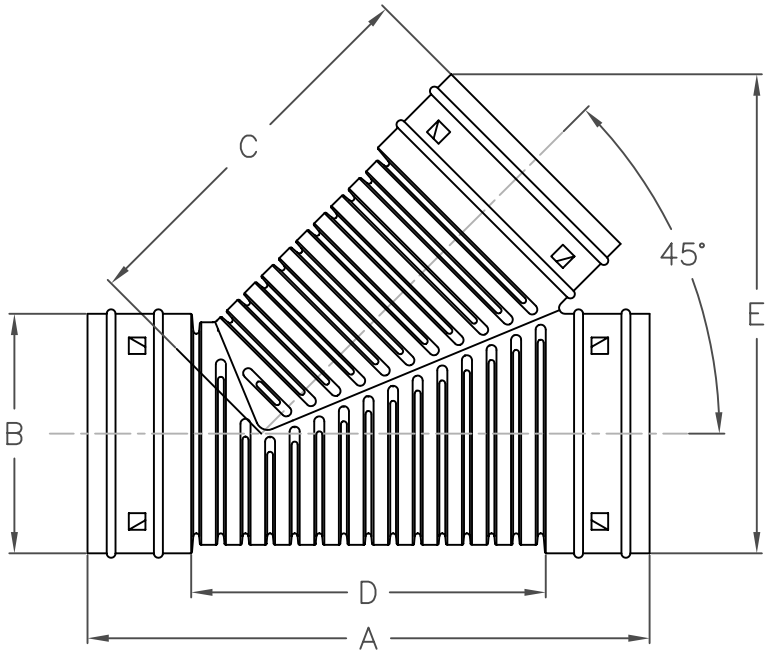

NOTE: ALL DIMENSIONS ARE NOMINAL

ADS
ADVANCED DRAINAGE SYSTEMS, INC.

DRAWN BY	APPROVED BY	DRAWING #
JDP 07.17.02	AWM 08.30.02	1020

REVISIONS	
BY	DATE

BLIND TEES

PART #	PIPE SIZE	A	B	C	D
0341AA	3 in (75 mm)	10.00 in (254 mm)	4.00 in (102 mm)	4.25 in (108 mm)	5.75 in (146 mm)
0441AA	4 in (100 mm)	12.00 in (305 mm)	5.13 in (130 mm)	4.00 in (102 mm)	7.50 in (191 mm)
0541AA	5 in (125 mm)	12.50 in (318 mm)	6.25 in (159 mm)	5.88 in (149 mm)	6.75 in (171 mm)
0641AA	6 in (150 mm)	14.00 in (356 mm)	7.38 in (187 mm)	6.25 in (159 mm)	7.75 in (197 mm)
0841AA	8 in (200 mm)	20.25 in (514 mm)	9.88 in (251 mm)	10.50 in (267 mm)	10.75 in (273 mm)
1041AA	10 in (250 mm)	21.50 in (546 mm)	12.25 in (311 mm)	12.25 in (311 mm)	10.75 in (273 mm)

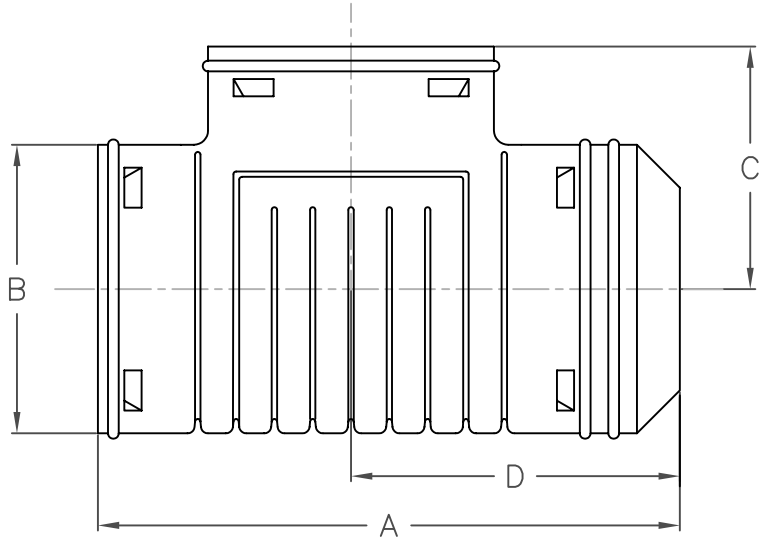

SINGLE WALL SNAP TEES

PART #	PIPE SIZE	A	B	C	D
0321AA	3 in (75 mm)	8.25 in (210 mm)	4.00 in (102 mm)	4.25 in (108 mm)	4.50 in (114 mm)
0421AA	4 in (100 mm)	9.50 in (241 mm)	5.13 in (130 mm)	4.00 in (102 mm)	5.50 in (140 mm)
0525AA	5 in (125 mm)	10.88 in (276 mm)	6.25 in (159 mm)	5.88 in (149 mm)	5.63 in (143 mm)
0626AA	6 in (150 mm)	12.50 in (318 mm)	7.38 in (187 mm)	6.25 in (159 mm)	7.75 in (197 mm)

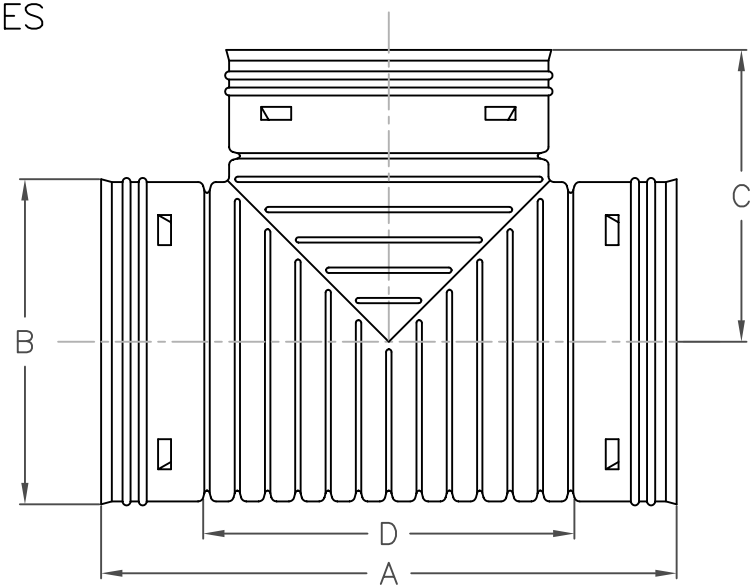

NOTE: ALL DIMENSIONS ARE NOMINAL

ADS
ADVANCED DRAINAGE SYSTEMS, INC.

DRAWN BY	APPROVED BY	DRAWING #
JDP 07.17.02	AWM 08.30.02	1025

REVISIONS	
BY	DATE

SINGLE WALL SNAP END CAPS

PART #	PIPE SIZE	A	B
0332AA	3 in (75 mm)	1.88 in (48 mm)	4.00 in (102 mm)
0432AA	4 in (100 mm)	2.75 in (70 mm)	5.13 in (130 mm)
0832AA	8 in (200 mm)	4.25 in (108 mm)	9.88 in (251 mm)
1032AA	10 in (250 mm)	5.00 in (127 mm)	12.50 in (318 mm)

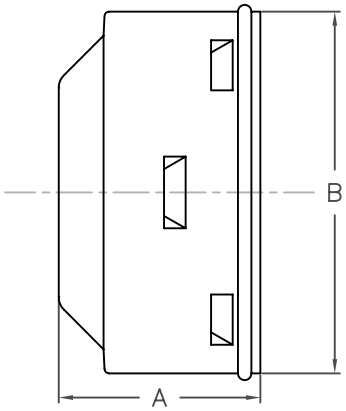

SINGLE WALL SPLIT END CAP

PART #	PIPE SIZE	A	B
0331AA	3 in (75 mm)	3.25 in (83 mm)	4.00 in (102 mm)
0431AA	4 in (100 mm)	2.75 in (70 mm)	5.13 in (130 mm)
0531AA	5 in (125 mm)	4.25 in (108 mm)	6.25 in (159 mm)
0631AA	6 in (150 mm)	3.25 in (83 mm)	7.38 in (187 mm)

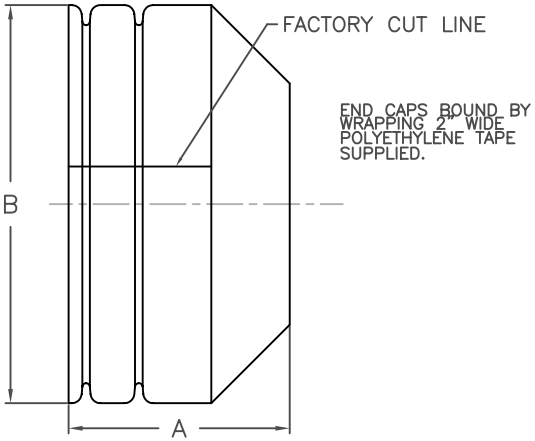

INTERNAL END PLUGS

PART #	PIPE SIZE	TYPE
0333AA	3 in (75 mm)	SOLID
0433AA	4 in (100 mm)	SOLID
0533AA	5 in (125 mm)	SOLID
0633AA	6 in (150 mm)	SOLID
0434AA	4 in (100 mm)	PERFORATED

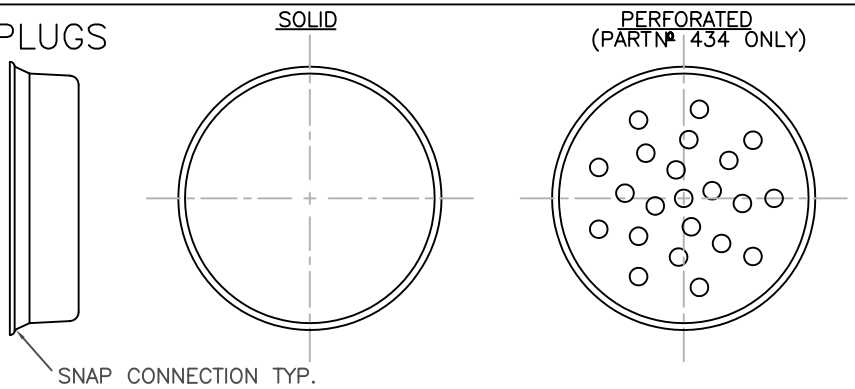

NOTE: ALL DIMENSIONS ARE NOMINAL

ADS
ADVANCED DRAINAGE SYSTEMS, INC.

DRAWN BY	APPROVED BY	DRAWING #
JDP 07.17.02	AWM 08.30.02	1045

REVISIONS	
BY	DATE

SINGLE WALL SNAP COUPLER

PART #	PIPE SIZE	A	B
0312AA	3 in (75 mm)	4.00 in (102 mm)	4.00 in (102 mm)
0412AA*	4. in (100 mm)	4.25 in (108 mm)	5.13 in (130 mm)
0512AA	5 in (125 mm)	4.38 in (111 mm)	6.25 in (159 mm)
0612AA	6 in (150 mm)	5.63 in (143 mm)	7.38 in (187 mm)
0812AA	8 in (200 mm)	6.00 in (152 mm)	10.00 in (254 mm)
1012AA	10 in (250 mm)	10.25 in (260 mm)	12.50 in (318 mm)

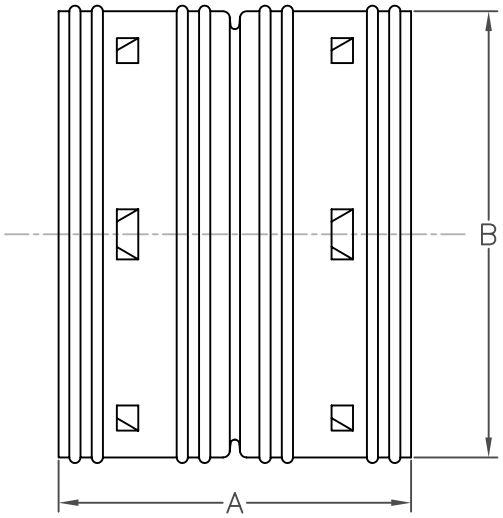

SINGLE WALL SPLIT COUPLER

COUPLERS BOUND BY WRAPPING 2" WIDE POLYETHYLENE TAPE SUPPLIED. 1011–AA AND 1211–AA USE LOCKING CABLES. SEE DRAWING 2000

PART #	PIPE SIZE	A	B
0311AA	3 in (75 mm)	3.00 in (76 mm)	4.00 in (102 mm)
0411AA	4 in (100 mm)	3.75 in (95 mm)	5.13 in (130 mm)
0511AA	5 in (125 mm)	4.00 in (102 mm)	6.25 in (159 mm)
0611AA	6 in (150 mm)	4.00 in (102 mm)	7.38 in (187 mm)
0811AA*	8 in (200 mm)	6.00 in (152 mm)	10.00 in (254 mm)
1011AA*	10 in (150 mm)	5.50 in (140 mm)	12.50 in (318 mm)
1211AA	12 in (300 mm)	8.25 in (210 mm)	15.50 in (394 mm)

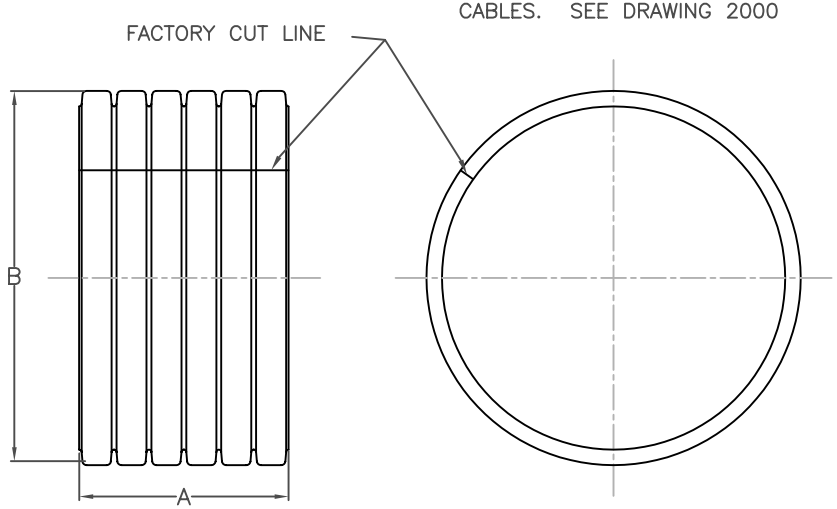

NOTE: ALL DIMENSIONS ARE NOMINAL

* DENOTES PARTS THAT CAN ALSO BE USED ON DUAL WALL PIPE

ADS
ADVANCED DRAINAGE SYSTEMS, INC.

DRAWN BY	APPROVED BY	DRAWING #
JDP 07.16.02	AWM 08.30.02	1000

REVISIONS	
BY	DATE

Product Notes

Product Note 3.102

Re: ADS Drain Guard and Sock
Date: March 1, 2002

Solutions to Tough Siltation Problems

Now Advanced Drainage Systems offers you two ways to meet tough siltation challenges head on.

These synthetic wrap materials combine with ADS corrugated polyethylene pipe to give an extra-strong, tough screen that stabilizes soils and keeps water flowing. Both feature opening sizes that have proven effective for moving water without blockage in a wide range of soils. The entire length of drain is covered, and corrugations are spanned by the materials, maintaining effective inlet areas which promote rapid drainage.

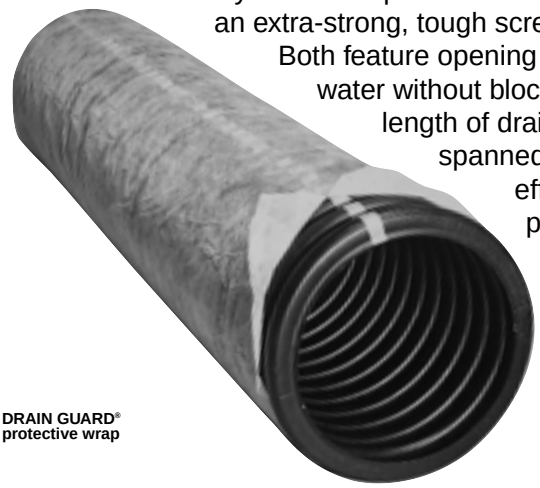

DRAIN GUARD®
protective wrap

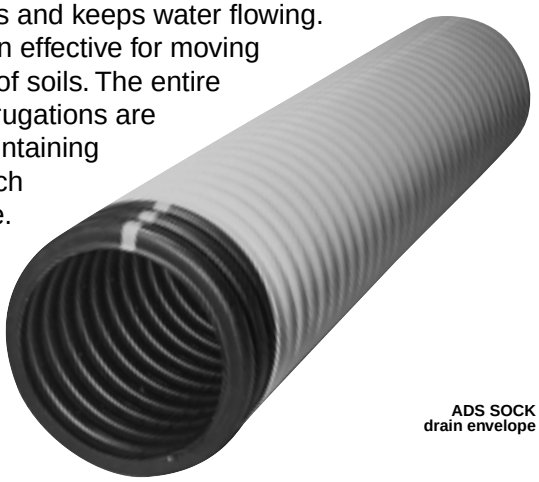

ADS SOCK
drain envelope

For drainage installations that require a tough, durable screen under normal handling conditions:

ADS DRAIN GUARD®

protective wrap, a complete, one-step drainage system for sandy and other problem soils, installed with conventional drainage equipment.

For jobs where the protective covering is subjected to unusually rough installation and handling conditions:

ADS SOCK

a flexible drain envelope that meets the needs of a wide range of soil conditions, installed with conventional drainage equipment.

Choose the ADS Synthetic envelope that's right for each job.

ADS DRAIN GUARD®

For normal routine installations.
Manufactured of 100% nylon, tough and durable DRAIN GUARD WEIGHS just 0.85 ounce per square yard. The material's unique bonding process gives you an ultraporous filter that restrains and stabilizes the soil, yet allows free entry of water.

ADS SOCK

For more rough-and-tumble installations.
A polyester machine-knitted envelope that provides the needed water entry and sediment protection. SOCK weighs approximately three ounces per square yard. SOCK stretches to fit snugly over the pipe and gives the extra protections required by rough handling conditions.

4640 TRUEMAN BLVD. HILLIARD, OH 43026 (800) 821-6710 http://www.ads-pipe.com

TECHNICAL INFORMATION

	DRAIN GUARD	ADS SOCK
Material	Nylon (100%)	Polyester (100%)
Fabric	Spun Bond	Knitted
Fiber size (denier per filament)	5	100 to 200
Weight (ounces per square yard) (ATSM D 3776)	0.85	2.5 to 3.5
Burst Strength (pounds per square inch) (ATSM D 3786)	28	100-135
Air Permeability (CFM per square foot) (ATSM D 737)	650	700
Equivalent Opening Size (Army Corps of Engineers) (W 02215)	50	30 to 40
Water Flow Rate (gal/min/ft^2) (ATSM D 4491)	163	———–
Melt Temperature (ATSM D 3786)	218˚C (425˚F.)	258˚C (496˚F.)

If either Drain Guard or Sock is not scheduled for immediate installation, it should be protected from sunlight's UV Rays.
Drain Guard is normally bagged in UV resistant bags for shipping.
*Nominal values for Drain Guard and Sock Filter material.

For applications in agriculture, highway construction and the building industry, ADS has the synthetic drain envelope for every job.

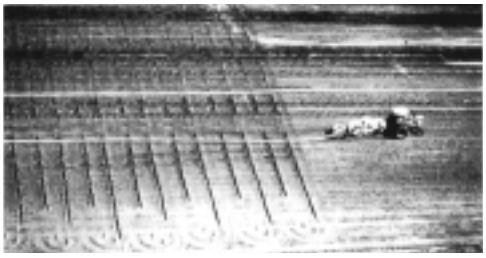

Each is strong, non-biodegradable and gives you the excellent filtering and soil stabilizing characteristics you need. Both **DRAIN GUARD** and **ADS SOCK** perform equally well in the ground for the life of your drainage installation. And, because these materials are factory installed on ADS pipe, you'll save valuable labor costs in the field.

STANDARD FEATURES

ADS DRAIN GUARD AND SOCK synthetic wrap materials — admit fine silt and clay; restrain sands and coarse silts — non-toxic, non-irritating — inert in soil — non-biodegradable — resist alkalis and acids — will not rot — not affected by freezing or thawing — continuouslengths up to 5000' — available for drainage pipe sizes from 3″ to 24″ diameter — factory applied, ready for installation — lower labor costs in the field.

Applicable Specifications
SCS Engineering Standards Code 606 —
ASTM D 6707 — **ASTM** F405 — **ASTM** F667 —
ASTM F449 — **AASHTO** M252, M294

TECHNICAL NOTE

HDPE Connections to Manholes and Structures

TN 5.04
February 2007

Introduction

A full line of pipe jointing options is available to fit the requirements of nearly any storm drain or gravity flow project specifications. The joints available range from soil tight split couplers to gasketed soil-tight (ST) and watertight (WT) pipe. When connecting pipe to drainage structures it is important to make those connections with a joint performance at least equal to that of the piping system.

Connection Options

Soil-Tight Performance

When using soil-tight pipe in non-watertight applications, it is may be acceptable to grout the void space between the HDPE pipe and drainage structure. Installation recommendations are outlined in Standard Details 201 and 202.

Watertight Performance

When using watertight pipe for testable systems, requiring some degree of watertight performance, it is necessary to provide additional measures to insure a watertight connection between the pipe and structure. ASTM F2510/F 2510M, "*Standard Specification for Resilient Connectors Between Reinforced Concrete Manhole Structures and Corrugated High Density Polyethylene Drainage Pipes*," is the governing standard for corrugated HDPE pipe-manhole connections, but specific performance/installation requirements should be verified for each specific project. Along with a full line of adapter fittings available, including the Waterstop® Gasket, are flexible boot fittings provided by other manufactures. Fitting dimensions should be supplied to the manufacturer to insure the proper fitting size and manhole boot connector are supplied. Installation recommendations and product details are outlined in Standard Details 201, 203, and 204(A-G).

Installation Recommendations

When installing a manhole adapter on the upstream end, the fitting may be over inserted into the structure temporarily while the adjoining pipe is laid. The spigot piece is then pushed back through the structure and connected to the bell end when pushing the joint together, as shown to the right.

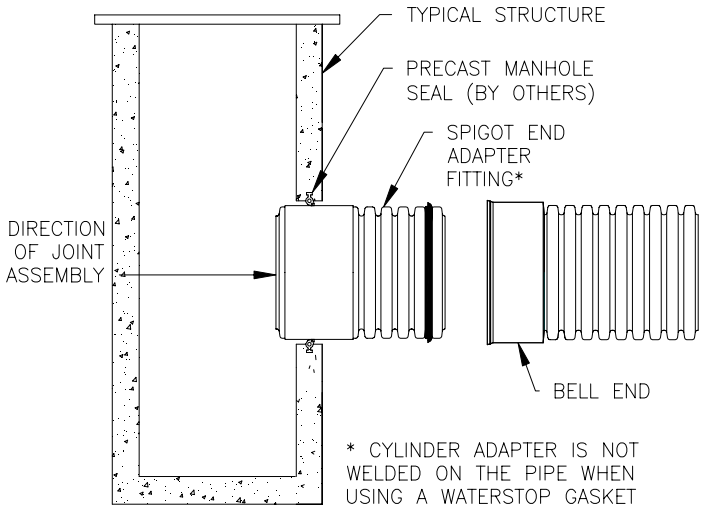

©ADS 2007

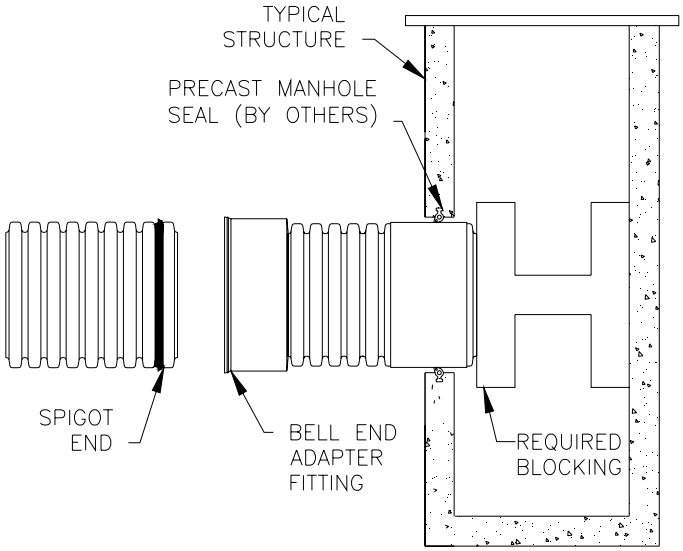

Alternately, when using the adapter fitting in the downstream end of the structure, before pushing the bell and spigot together from inside the structure, it is necessary to provide blocking at the structure to prevent the fitting from moving in the structure, as shown to the left.

Summary

The selection of which manhole connection is best suited for a project is based on the joint and connection requirements along with preferred manhole connection method for the region. It is imperative that prevailing regulations be consulted before selecting a manhole connection. Other options may be available for watertight manhole connections. Refer to Standard Details 201 through 204 (A-G) for installation and connection-specific details. Contact your Regional Engineer or Application Engineering for further assistance.

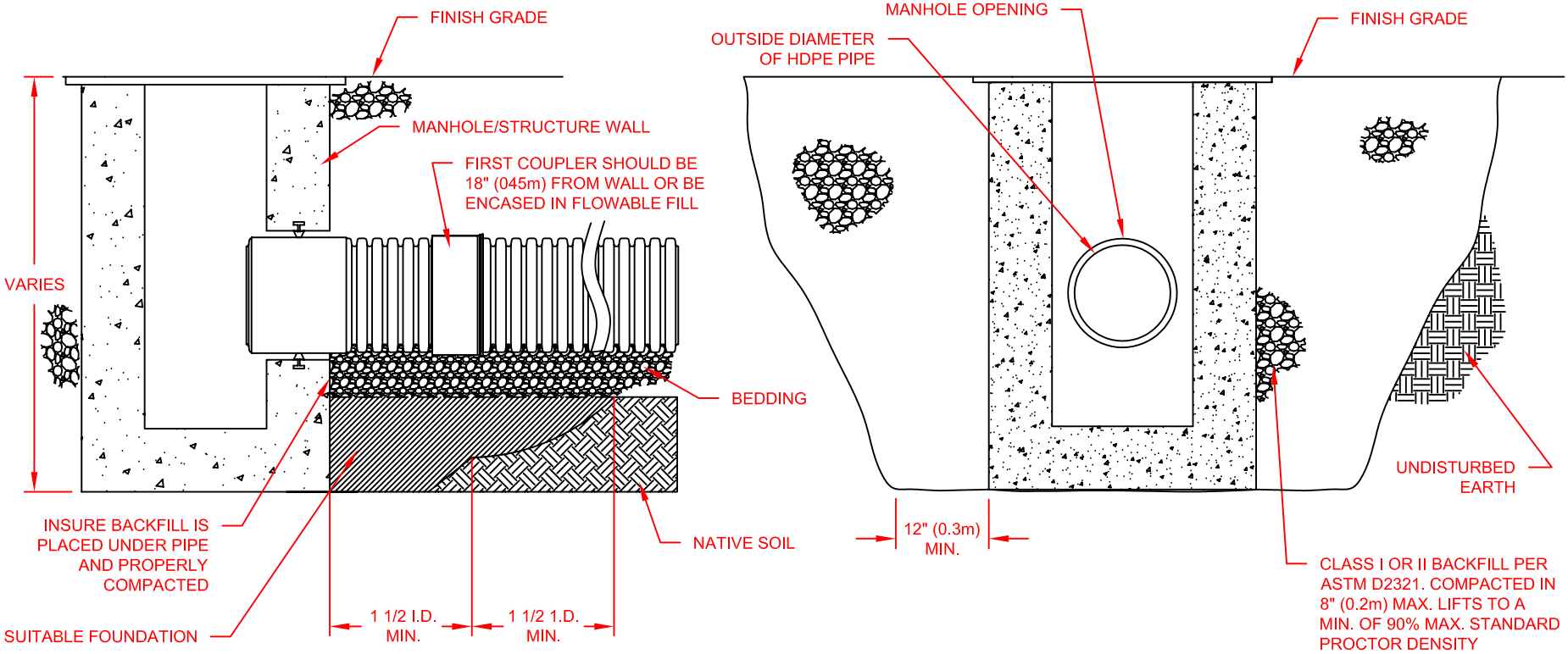

NOTES:

1. MAXIMUM INSERTION ANGLE SHALL NOT EXCEED REQUIREMENTS AS SPECIFIED BY THE MANUFACTURER.

2. SEE STANDARD DETAILS STD-202 (A-B) THROUGH STD-204 (A-E) FOR STRUCTURE CONNECTIONS, PRODUCT INFORMATION AND DIMENSIONAL PIPE DATA. INSTALLATION RECOMMENDATIONS ARE ALSO SPECIFIED IN TECHNICAL NOTE 5.04: HDPE CONNECTIONS TO MANHOLES AND STRUCTURES.

3. PERFORMANCE HIGHLY DEPENDENT ON INSTALLATION. CONTRACTOR MUST INSURE MANHOLE GASKET IS UNIFORMLY SEATED AROUND STRUCTURE ADAPTER. EXTRA PRECAUTIONSMUST BE TAKEN TO PREVENT DIFFERENTIAL SETTLEMENT BETWEEN THE PIPE AND MANHOLE.

© 2007 ADS, INC.

REV.	DESCRIPTION	BY	MM/DD/YY	CHK'D
1	UPDATED DRAWING	TJR	02/20/07	CKS

ADVANCED DRAINAGE SYSTEMS, INC. ("ADS") HAS PREPARED THIS DETAIL BASED ON INFORMATION PROVIDED TO ADS. THIS DRAWING IS INTENDED TO DEPICT THE COMPONENTS AS REQUESTED. ADS HAS NOT PERFORMED ANY ENGINEERING OR DESIGN SERVICES FOR THIS PROJECT, NOR HAS ADS INDEPENDENTLY VERIFIED THE INFORMATION SUPPLIED. THE INSTALLATION DETAILS PROVIDED HEREIN ARE GENERAL RECOMMENDATIONS AND ARE NOT SPECIFIC FOR THIS PROJECT. THE DESIGN ENGINEER SHALL REVIEW THESE DETAILS PRIOR TO CONSTRUCTION. IT IS THE DESIGN ENGINEERS RESPONSIBILITY TO ENSURE THE DETAILS PROVIDED HEREIN MEETS OR EXCEEDS THE APPLICABLE NATIONAL, STATE, OR LOCAL REQUIREMENTS AND TO ENSURE THAT THE DETAILS PROVIDED HEREIN ARE ACCEPTABLE FOR THIS PROJECT.

STRUCTURE CONNECTION INSTALLATION DETAIL

DRAWING NUMBER: STD–201

ADS
ADVANCED DRAINAGE SYSTEMS, INC.
4640 TRUEMAN BLVD
HILLIARD, OHIO 43026

DRAWN BY:	CKS
DATE:	10/10/06
CK'D BY:	
SCALE:	NTS
SHEET	1 OF 1

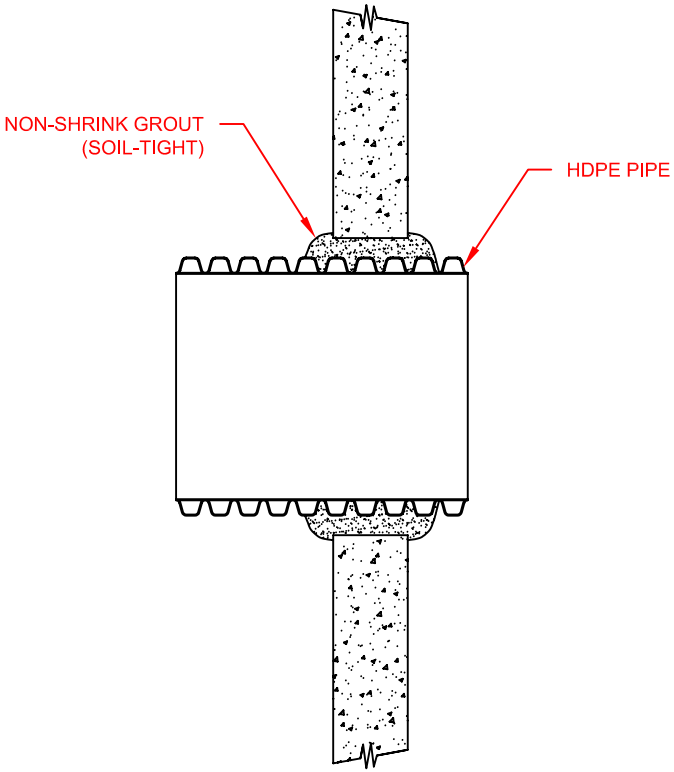

TYPE 1: SOIL-TIGHT USING NON-SHRINK
GROUT AND CORRUGATED PIPE

SEE STANDARD DETAIL STD-201 AND TECHNICAL
NOTE: 5.04 HDPE CONNECTIONS TO MANHOLES AND STRUCTURES
FOR INSTALLATION RECOMMENDATIONS.

REV.	DESCRIPTION	BY	MM/DD/YY	CHK'D
1	UPDATED DRAWING	TJR	02/20/07	CKS

© 2007 ADS, INC.

ADVANCED DRAINAGE SYSTEMS, INC. ("ADS") HAS PREPARED THIS DETAIL BASED ON INFORMATION PROVIDED TO ADS. THIS DRAWING IS INTENDED TO DEPICT THE COMPONENTS AS REQUESTED. ADS HAS NOT PERFORMED ANY ENGINEERING OR DESIGN SERVICES FOR THIS PROJECT, NOR HAS ADS INDEPENDENTLY VERIFIED THE INFORMATION SUPPLIED. THE INSTALLATION DETAILS PROVIDED HEREIN ARE GENERAL RECOMMENDATIONS AND ARE NOT SPECIFIC FOR THIS PROJECT. THE DESIGN ENGINEER SHALL REVIEW THESE DETAILS PRIOR TO CONSTRUCTION. IT IS THE DESIGN ENGINEERS RESPONSIBILITY TO ENSURE THE DETAILS PROVIDED HEREIN MEETS OR EXCEEDS THE APPLICABLE NATIONAL, STATE, OR LOCAL REQUIREMENTS AND TO ENSURE THAT THE DETAILS PROVIDED HEREIN ARE ACCEPTABLE FOR THIS PROJECT.

SOIL-TIGHT STRUCTURE CONNECTION TYPE 1 DETAIL

DRAWING NUMBER: STD-202A

ADS
ADVANCED DRAINAGE SYSTEMS, INC.
4640 TRUEMAN BLVD
HILLIARD, OHIO 43026

DRAWN BY:	BRV
DATE:	9/15/06
CK'D BY:	
SCALE:	NTS
SHEET	1 OF 1

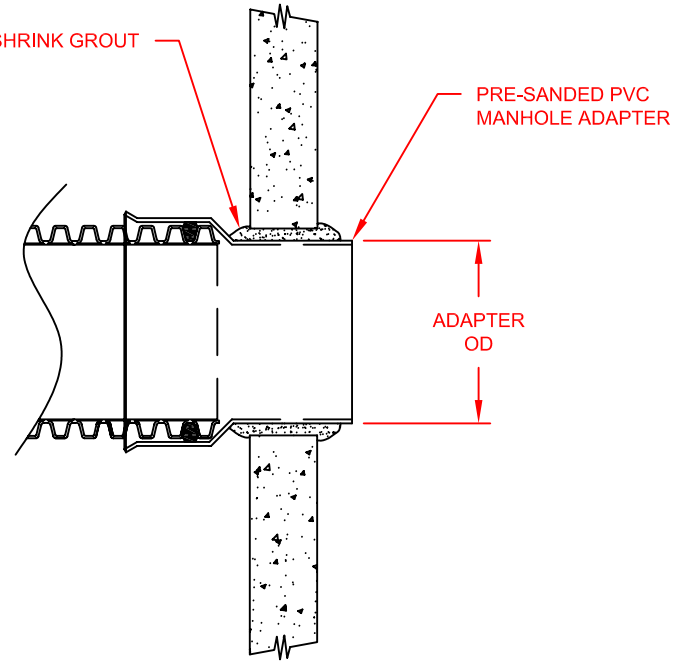

TYPE 2: SANDED PVC MANHOLE ADAPTER GROUTED
INTO MANHOLE WALL

SEE STANDARD DETAIL STD-201 AND TECHNICAL
NOTE: 5.04 HDPE CONNECTIONS TO MANHOLES AND STRUCTURES
FOR INSTALLATION RECOMMENDATIONS.

PIPE SIZE (IN)	ADAPTER OD (IN)	ADS PRODUCT CODES
12	12.5	1277AG
15	15.3	1577AG
18	18.7	1877AG
24	24.8	2477AG
30	32.0	3077AG

** FOR USE WITH A PROFILE PIPE ONLY **

*PERFORMANCE HIGHLY DEPENDENT ON INSTALLATION. CONTRACTOR MUST INSURE MANHOLE GASKET IS UNIFORMLY SEATED AROUND STRUCTURE ADAPTER. EXTRA PRECAUTIONS MUST BE TAKEN TO PREVENT DIFFERENTIAL SETTLEMENT BETWEEN THE PIPE AND MANHOLE.

© 2007 ADS, INC.

REV.	DESCRIPTION	BY	MM/DD/YY	CHK'D
1	UPDATED DRAWING	TJR	02/20/07	CKS

ADVANCED DRAINAGE SYSTEMS, INC. ("ADS") HAS PREPARED THIS DETAIL BASED ON INFORMATION PROVIDED TO ADS. THIS DRAWING IS INTENDED TO DEPICT THE COMPONENTS AS REQUESTED. ADS HAS NOT PERFORMED ANY ENGINEERING OR DESIGN SERVICES FOR THIS PROJECT, NOR HAS ADS INDEPENDENTLY VERIFIED THE INFORMATION SUPPLIED. THE INSTALLATION DETAILS PROVIDED HEREIN ARE GENERAL RECOMMENDATIONS AND ARE NOT SPECIFIC FOR THIS PROJECT. THE DESIGN ENGINEER SHALL REVIEW THESE DETAILS PRIOR TO CONSTRUCTION. IT IS THE DESIGN ENGINEERS RESPONSIBILITY TO ENSURE THE DETAILS PROVIDED HEREIN MEETS OR EXCEEDS THE APPLICABLE NATIONAL, STATE, OR LOCAL REQUIREMENTS AND TO ENSURE THAT THE DETAILS PROVIDED HEREIN ARE ACCEPTABLE FOR THIS PROJECT.

SOIL-TIGHT STRUCTURE CONNECTION TYPE 2 DETAIL

DRAWING NUMBER: STD-202B

ADS
ADVANCED DRAINAGE SYSTEMS, INC.
4640 TRUEMAN BLVD
HILLIARD, OHIO 43026

DRAWN BY:	CKS
DATE:	10/10/06
CK'D BY:	
SCALE:	NTS
SHEET	1 OF 1

INSTALLATION VIEW

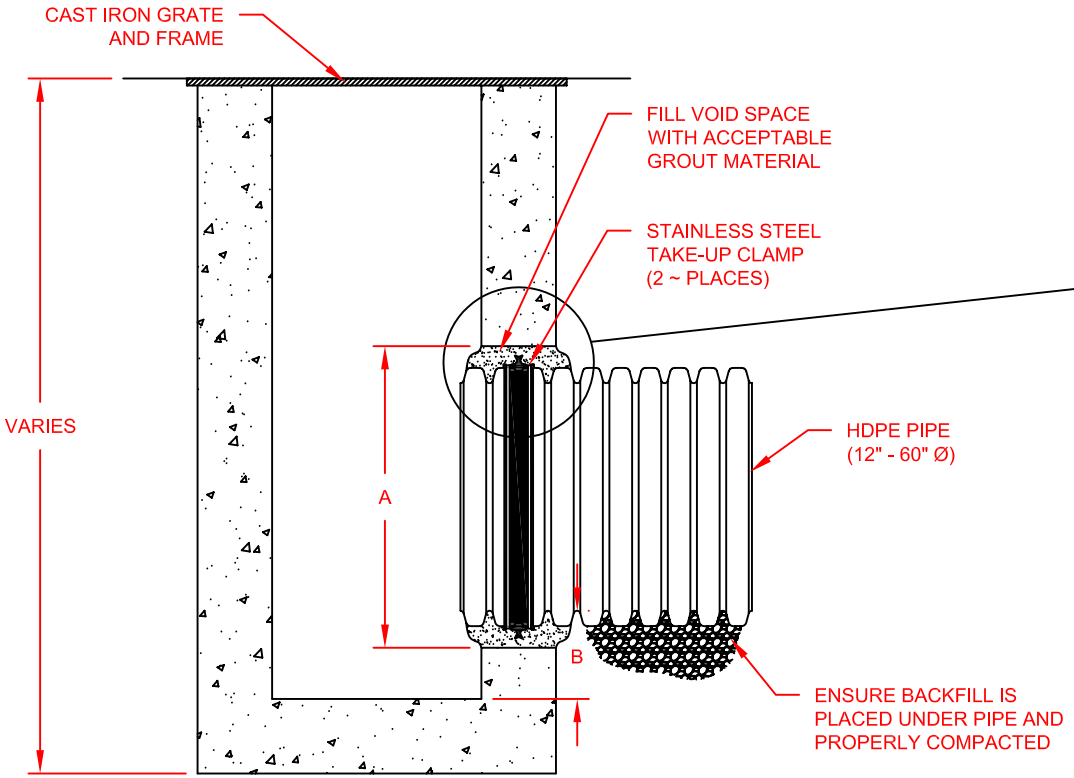

DETAILED CONNECTION VIEW

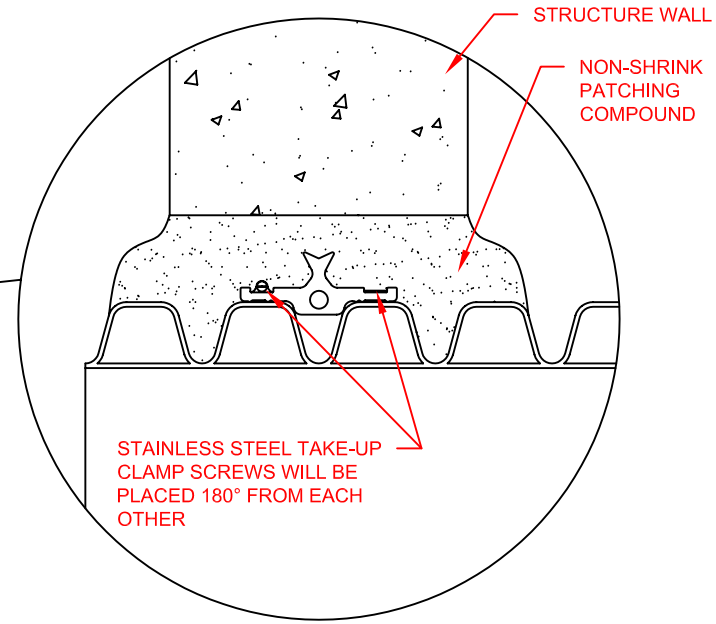

TYPE 3: WATERSTOP™ GASKET W/
CORRUGATED HDPE PIPE

INSTALLATION RECOMMENDATIONS ARE ALSO SPECIFIED IN
INSTALLATION GUIDE 1.05: WATERSTOP INSTALLATION

PIPE SIZE (IN)	PIPE OD (IN) A-PROFILE	PIPE OD (IN) H-PROFILE	"A" MIN. HOLE Ø (IN)	"B" MIN. DISTANCE PIPE INVERT TO STRUCUTRE INVERT (IN)	MANUFACTURER'S PRODUCT CODE
12	14.5	14.2	19.50	3.7	1202PS
15	17.6	17.8	23.00	4.0	1502PS
18	21.2	21.5	26.50	4.2	1802PS
24	27.8	28.4	33.25	4.5	2402PS
30	35.1	35.5	40.50	5.2	3002PS
36	41.1	41.4	47.00	5.5	3602PS
42	47.7	48.0	53.00	5.7	4202PS
48	53.6	54.0	59.00	5.7	4802PS
60	66.3	67.3	72.00	6.4	6002PS

REV.	DESCRIPTION	BY	MM/DD/YY	CHK'D
1	UPDATED DRAWING	TJR	02/21/07	CKS

© 2007 ADS, INC.

ADVANCED DRAINAGE SYSTEMS, INC. ("ADS") HAS PREPARED THIS DETAIL BASED ON INFORMATION PROVIDED TO ADS. THIS DRAWING IS INTENDED TO DEPICT THE COMPONENTS AS REQUESTED. ADS HAS NOT PERFORMED ANY ENGINEERING OR DESIGN SERVICES FOR THIS PROJECT, NOR HAS ADS INDEPENDENTLY VERIFIED THE INFORMATION SUPPLIED. THE INSTALLATION DETAILS PROVIDED HEREIN ARE GENERAL RECOMMENDATIONS AND ARE NOT SPECIFIC FOR THIS PROJECT. THE DESIGN ENGINEER SHALL REVIEW THESE DETAILS PRIOR TO CONSTRUCTION. IT IS THE DESIGN ENGINEERS RESPONSIBILITY TO ENSURE THE DETAILS PROVIDED HEREIN MEETS OR EXCEEDS THE APPLICABLE NATIONAL, STATE, OR LOCAL REQUIREMENTS AND TO ENSURE THAT THE DETAILS PROVIDED HEREIN ARE ACCEPTABLE FOR THIS PROJECT.

WATERSTOP STRUCTURE CONNECTION DETAIL

DRAWING NUMBER: STD–203

ADS
ADVANCED DRAINAGE SYSTEMS, INC.
4640 TRUEMAN BLVD
HILLIARD, OHIO 43026

DRAWN BY:	CKS
DATE:	10/10/06
CK'D BY:	
SCALE:	NTS
SHEET	1 OF 1

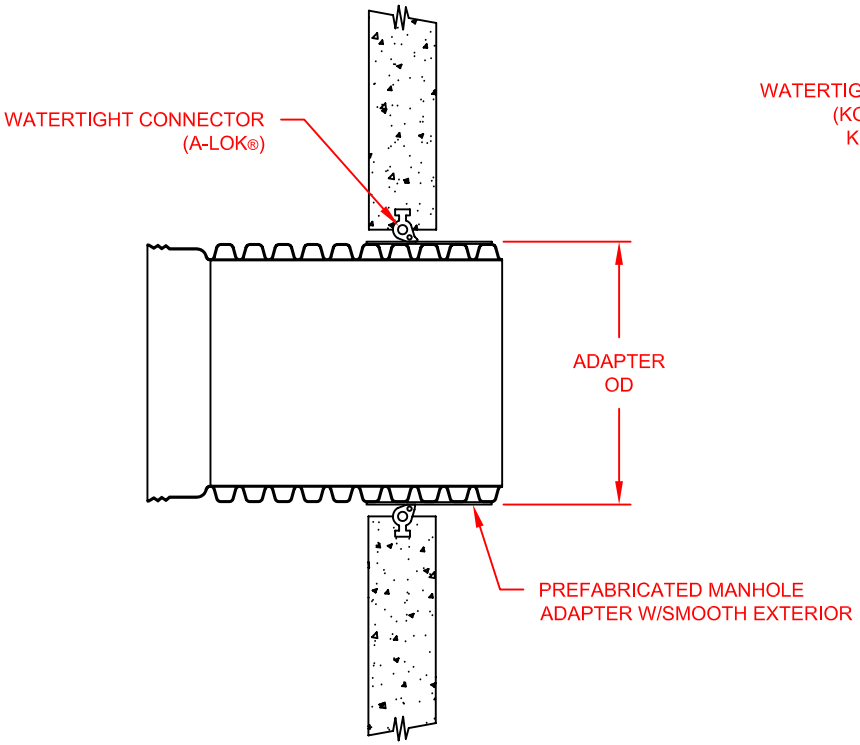

TYPE 1A: A-LOK GASKET (PRE-CAST) W/HDPE PREFABRICATED MANHOLE ADAPTER W/ SMOOTH EXTERIOR

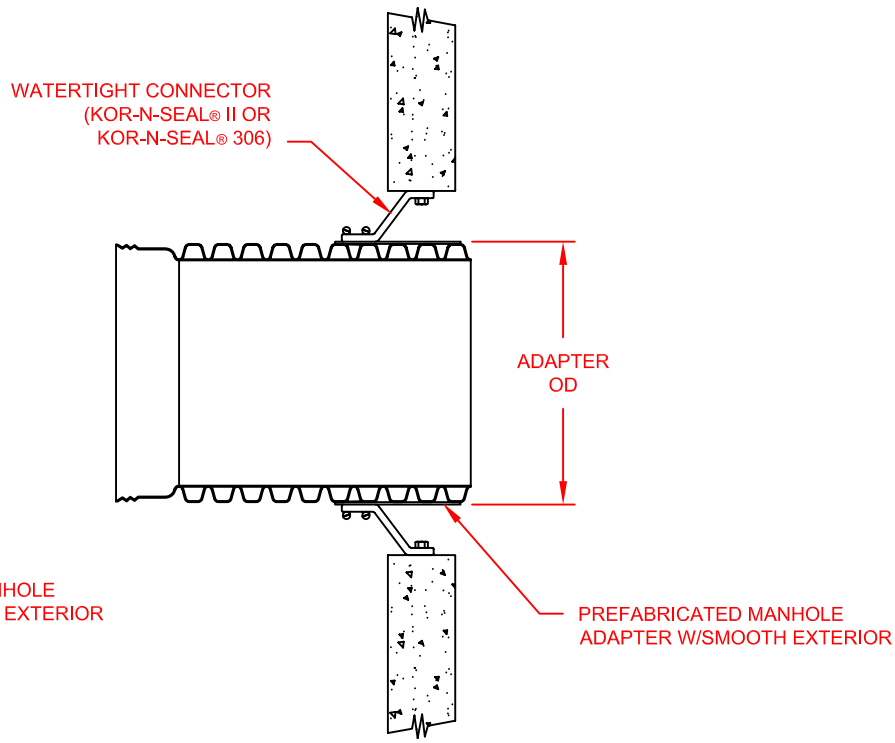

TYPE 1B: KOR-N-SEAL (CORED HOLE OR PRE-CAST) W/ FIELD INSTALLED MANHOLE BOOT W/ HDPE PREFABRICATED MANHOLE ADAPTER W/ SMOOTH EXTERIOR

SEE STANDARD DETAIL STD-201 AND TECHNICAL NOTE: 5.04 HDPE CONNECTIONS TO MANHOLES AND STRUCTURES FOR INSTALLATION RECOMMENDATIONS.

PIPE SIZE	ADAPTER OD (IN)		ADS PRODUCT CODES		KOR-N-SEAL® **		A-LOK RING® **	
(IN)	A-PROFILE	H-PROFILE	A-PROFILE	H-PROFILE	SERIES I OR II	SERIES 306	A-PROFILE	H-PROFILE
12	14.75	14.45	1222ANB	1222ANBH	S106-20BWS	N/A	480	475
15	18.0	18.05	1522ANB	1522ANBH	S106-20WS	S306-22	580	580
18	21.75	22.0	1822ANB	1822ANBH	S206-26	S306-26	710	710
24	28.57	28.9	2422ANB	2422ANBH	S206-32	S306-32	915	930
30	35.93	36.0	3022ANB	3022ANBH	S206-40	S306-40	1180	1180
36	41.85	42.15	3622ANB	3622ANBH	S206-46	S306-46	1350	1360
42	48.52	48.75	4222ANB	4222ANBH	S206-52L	S306-52L	1560	1570
48	54.66	55.75	4822ANB	4822ANBH	S206-58L	S306-58L	1745	1790
54	N/A	61.75	N/A	CUSTOM	S206-64L	N/A	1940	1940
60	67.46	68.05	6022ANB	6022ANBH	S206-72	N/A	2170	2170

NOTES:

PERFORMANCE HIGHLY DEPENDENT ON INSTALLATION. CONTRACTOR MUST INSURE MANHOLE GASKET IS UNIFORMLY SEATED AROUND STRUCTURE ADAPTER. EXTRA PRECAUTIONS MUST BE TAKEN TO PREVENT DIFFERENTIAL SETTLEMENT BETWEEN THE PIPE AND MANHOLE.

** THIRD PARTY - CODES AS SUPPLIED BY MANUFACTURER

KOR-N-SEAL is a registered trademark of NPC, Inc. (www.npc.com)
A-LOK is a registered trademark of A-LOK Products, Inc. (www.a-lok.com)

REV.	DESCRIPTION	BY	MM/DD/YY	CHK'D
1	UPDATED DRAWING	TJR	02/21/07	CKS

© 2007 ADS, INC.

ADVANCED DRAINAGE SYSTEMS, INC. ("ADS") HAS PREPARED THIS DETAIL BASED ON INFORMATION PROVIDED TO ADS. THIS DRAWING IS INTENDED TO DEPICT THE COMPONENTS AS REQUESTED. ADS HAS NOT PERFORMED ANY ENGINEERING OR DESIGN SERVICES FOR THIS PROJECT, NOR HAS ADS INDEPENDENTLY VERIFIED THE INFORMATION SUPPLIED. THE INSTALLATION DETAILS PROVIDED HEREIN ARE GENERAL RECOMMENDATIONS AND ARE NOT SPECIFIC FOR THIS PROJECT. THE DESIGN ENGINEER SHALL REVIEW THESE DETAILS PRIOR TO CONSTRUCTION. IT IS THE DESIGN ENGINEERS RESPONSIBILITY TO ENSURE THE DETAILS PROVIDED HEREIN MEETS OR EXCEEDS THE APPLICABLE NATIONAL, STATE, OR LOCAL REQUIREMENTS AND TO ENSURE THAT THE DETAILS PROVIDED HEREIN ARE ACCEPTABLE FOR THIS PROJECT.

WATERTIGHT STRUCTURE CONNECTION TYPE 1 DETAIL

DRAWING NUMBER: STD–204A

ADS
ADVANCED DRAINAGE SYSTEMS, INC.
4640 TRUEMAN BLVD
HILLIARD, OHIO 43026

DRAWN BY:	CKS
DATE:	10/10/06
CK'D BY:	
SCALE:	NTS
SHEET	1 OF 1

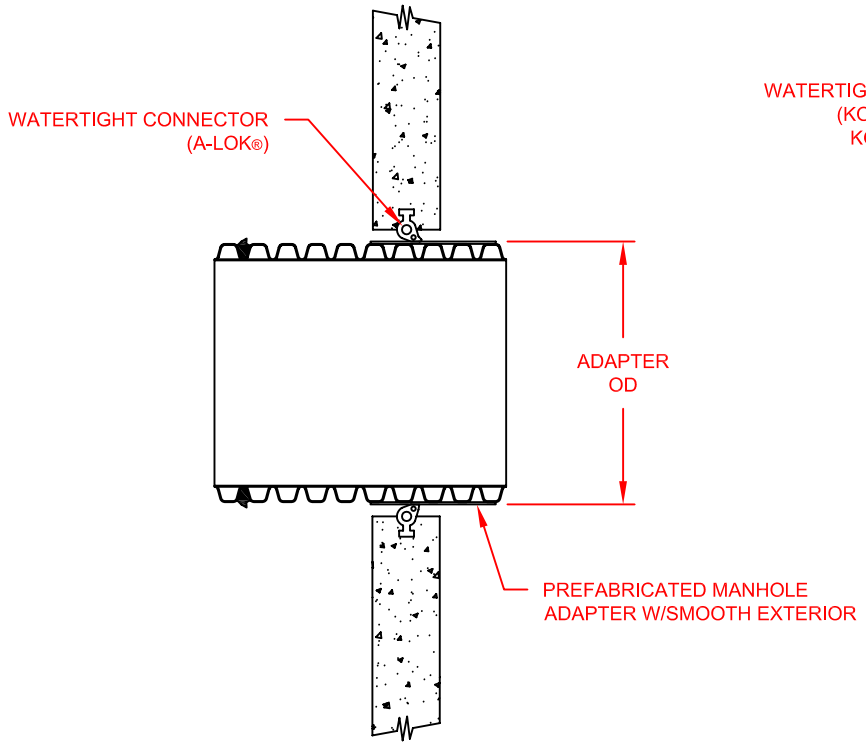

TYPE 2A: A-LOK GASKET (PRE-CAST) W/HDPE PREFABRICATED MANHOLE ADAPTER W/ SMOOTH EXTERIOR

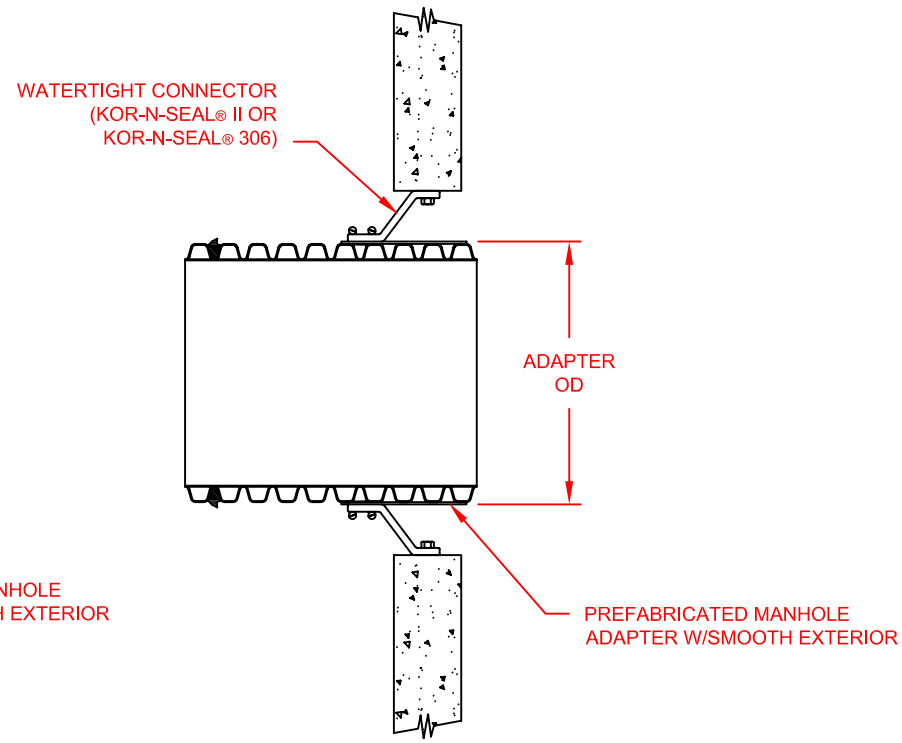

TYPE 2B: KOR-N-SEAL (CORED HOLE OR PRE-CAST) W/ FIELD INSTALLED MANHOLE BOOT W/ HDPE PREFABRICATED MANHOLE ADAPTER W/ SMOOTH EXTERIOR

REFER TO STANDARD DETAIL STD-201. INSTALLATION RECOMMENDATIONS ARE ALSO SPECIFIED IN TECHNICAL NOTE 5.04 HDPE CONNECTIONS TO MANHOLES AND STRUCTURES

PIPE SIZE	ADAPTER OD (IN)		ADS PRODUCT CODES		KOR-N-SEAL® **		A-LOK RING® **	
(IN)	A-PROFILE	H-PROFILE	A-PROFILE	H-PROFILE	SERIES I OR II	SERIES 306	A-PROFILE	H-PROFILE
12	14.75	14.45	1222AN	CUSTOM	S106-20BWS	N/A	480	475
15	18.0	18.05	1522AN	CUSTOM	S106-20WS	S306-22	580	580
18	21.75	22.0	1822AN	CUSTOM	S206-26	S306-26	710	710
24	28.57	28.9	2422AN	CUSTOM	S206-32	S306-32	915	930
30	35.93	36.0	3022AN	CUSTOM	S206-40	S306-40	1180	1180
36	41.85	42.15	3622AN	CUSTOM	S206-46	S306-46	1350	1360
42	48.52	48.75	4222AN	CUSTOM	S206-52L	S306-52L	1560	1570
48	54.66	55.75	4822AN	CUSTOM	S206-58L	S306-58L	1745	1790
54	N/A	61.75	N/A	CUSTOM	S206-64L	N/A	1940	1940
60	67.46	68.05	6022AN	CUSTOM	S206-72	N/A	2170	2170

NOTES:

PERFORMANCE HIGHLY DEPENDENT ON INSTALLATION. CONTRACTOR MUST INSURE MANHOLE GASKET IS UNIFORMLY SEATED AROUND STRUCTURE ADAPTER. EXTRA PRECAUTIONS MUST BE TAKEN TO PREVENT DIFFERENTIAL SETTLEMENT BETWEEN THE PIPE AND MANHOLE.

** THIRD PARTY - CODES AS SUPPLIED BY MANUFACTURER

KOR-N-SEAL is a registered trademark of NPC, Inc. (www.npc.com)
A-LOK is a registered trademark of A-LOK Products, Inc. (www.a-lok.com)

REV.	DESCRIPTION	BY	MM/DD/YY	CHK'D
1	UPDATED DRAWING	TJR	02/21/07	CKS

© 2007 ADS, INC.

ADVANCED DRAINAGE SYSTEMS, INC. ("ADS") HAS PREPARED THIS DETAIL BASED ON INFORMATION PROVIDED TO ADS. THIS DRAWING IS INTENDED TO DEPICT THE COMPONENTS AS REQUESTED. ADS HAS NOT PERFORMED ANY ENGINEERING OR DESIGN SERVICES FOR THIS PROJECT, NOR HAS ADS INDEPENDENTLY VERIFIED THE INFORMATION SUPPLIED. THE INSTALLATION DETAILS PROVIDED HEREIN ARE GENERAL RECOMMENDATIONS AND ARE NOT SPECIFIC FOR THIS PROJECT. THE DESIGN ENGINEER SHALL REVIEW THESE DETAILS PRIOR TO CONSTRUCTION. IT IS THE DESIGN ENGINEERS RESPONSIBILITY TO ENSURE THE DETAILS PROVIDED HEREIN MEETS OR EXCEEDS THE APPLICABLE NATIONAL, STATE, OR LOCAL REQUIREMENTS AND TO ENSURE THAT THE DETAILS PROVIDED HEREIN ARE ACCEPTABLE FOR THIS PROJECT.

WATERTIGHT STRUCTURE CONNECTION TYPE 2 DETAIL

DRAWING NUMBER: STD–204B

ADS
ADVANCED DRAINAGE SYSTEMS, INC.
4640 TRUEMAN BLVD
HILLIARD, OHIO 43026

DRAWN BY: CKS
DATE: 10/10/06
CK'D BY:
SCALE: NTS
SHEET 1 OF 1

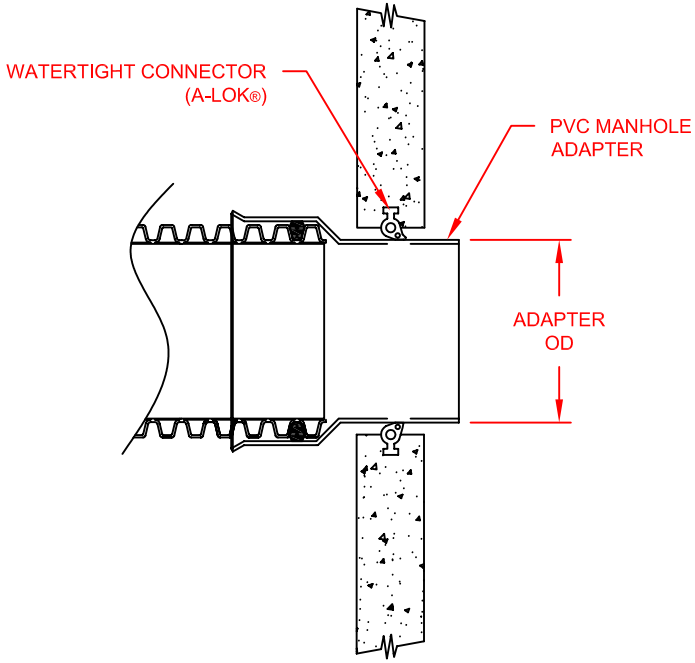

TYPE 3A: A-LOK (PRE-CAST) MANHOLE GASKET W/ PVC MANHOLE ADAPTER

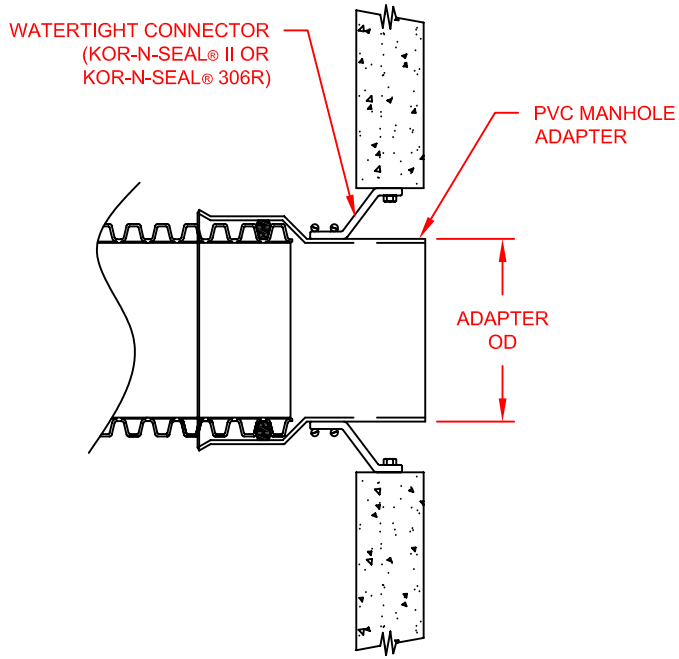

TYPE 3B: KOR-N-SEAL (CORED HOLE OR PRE-CAST) W/ FIELD INSTALLED MANHOLE BOOT W/ PVC MANHOLE ADAPTER

SEE STANDARD DETAIL STD-201 AND TECHNICAL NOTE: 5.04 HDPE CONNECTIONS TO MANHOLES AND STRUCTURES FOR INSTALLATION RECOMMENDATIONS.

PIPE SIZE (IN)	ADAPTER OD	ADS PRODUCT CODES	KOR-N-SEAL® **		A-LOK RING® **
			SERIES I OR II	SERIES 306	
12	12.5	1268AG	S106-16AWP	N/A	410
15	15.3	1568AG	S106-20BWS	N/A	490
18	18.7	1868AG	S206-24A	S306-22	610
24	24.8	2468AG	S206-28	S306-28	800

NOTES:

PERFORMANCE HIGHLY DEPENDENT ON INSTALLATION. CONTRACTOR MUST INSURE MANHOLE GASKET IS UNIFORMLY SEATED AROUND STRUCTURE ADAPTER. EXTRA PRECAUTIONS MUST BE TAKEN TO PREVENT DIFFERENTIAL SETTLEMENT BETWEEN THE PIPE AND MANHOLE.

** THIRD PARTY - CODES AS SUPPLIED BY MANUFACTURER

KOR-N-SEAL is a registered trademark of NPC, Inc. (www.npc.com)
A-LOK is a registered trademark of A-LOK Products, Inc. (www.a-lok.com)

REV.	DESCRIPTION	BY	MM/DD/YY	CHK'D
1	UPDATED DRAWING	TJR	02/20/07	CKS

© 2007 ADS, INC.

ADVANCED DRAINAGE SYSTEMS, INC. ("ADS") HAS PREPARED THIS DETAIL BASED ON INFORMATION PROVIDED TO ADS. THIS DRAWING IS INTENDED TO DEPICT THE COMPONENTS AS REQUESTED. ADS HAS NOT PERFORMED ANY ENGINEERING OR DESIGN SERVICES FOR THIS PROJECT, NOR HAS ADS INDEPENDENTLY VERIFIED THE INFORMATION SUPPLIED. THE INSTALLATION DETAILS PROVIDED HEREIN ARE GENERAL RECOMMENDATIONS AND ARE NOT SPECIFIC FOR THIS PROJECT. THE DESIGN ENGINEER SHALL REVIEW THESE DETAILS PRIOR TO CONSTRUCTION. IT IS THE DESIGN ENGINEERS RESPONSIBILITY TO ENSURE THE DETAILS PROVIDED HEREIN MEETS OR EXCEEDS THE APPLICABLE NATIONAL, STATE, OR LOCAL REQUIREMENTS AND TO ENSURE THAT THE DETAILS PROVIDED HEREIN ARE ACCEPTABLE FOR THIS PROJECT.

WATERTIGHT STRUCTURE CONNECTION TYPE 3 DETAIL

DRAWING NUMBER: STD–204C

ADS
ADVANCED DRAINAGE SYSTEMS, INC.
4640 TRUEMAN BLVD
HILLIARD, OHIO 43026

DRAWN BY:	CKS
DATE:	10/10/06
CK'D BY:	
SCALE:	NTS
SHEET	1 OF 1

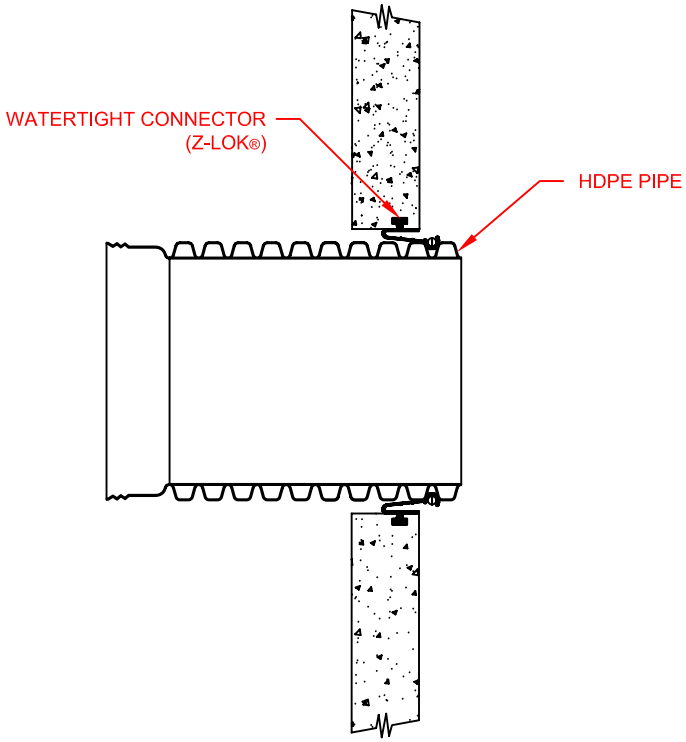

TYPE 4: Z-LOK (PRE-CAST MANHOLE GASKET)
SECURED DIRECTLY TO EXTERIOR
PIPE CORRUGATIONS

SEE STANDARD DETAIL STD-201 AND TECHNICAL NOTE: 5.04 HDPE CONNECTIONS TO MANHOLES AND STRUCTURES FOR INSTALLATION RECOMMENDATIONS.

PIPE SIZE (IN)	PIPE OD (IN)		Z-LOK** RING	
	A-PROFILE	H-PROFILE	A-PROFILE	H-PROFILE
12	14.5	14.2	8016	8016
15	17.6	17.8	8019	8019
18	21.2	21.5	8022	8023
24	27.8	28.4	8029	8031
30	35.1	35.5	8039	8039
36	41.1	41.4	8045	8045

NOTES:

PERFORMANCE HIGHLY DEPENDENT ON INSTALLATION. CONTRACTOR MUST INSURE MANHOLE GASKET IS UNIFORMLY SEATED AROUND STRUCTURE ADAPTER. EXTRA PRECAUTIONS MUST BE TAKEN TO PREVENT DIFFERENTIAL SETTLEMENT BETWEEN THE PIPE AND MANHOLE.

** THIRD PARTY - CODES AS SUPPLIED BY MANUFACTURER

KOR-N-SEAL is a registered trademark of NPC, Inc. (www.npc.com)

REV.	DESCRIPTION	BY	MM/DD/YY	CHK'D
1	UPDATED DRAWING	TJR	02/20/07	CKS

© 2007 ADS, INC.

ADVANCED DRAINAGE SYSTEMS, INC. ("ADS") HAS PREPARED THIS DETAIL BASED ON INFORMATION PROVIDED TO ADS. THIS DRAWING IS INTENDED TO DEPICT THE COMPONENTS AS REQUESTED. ADS HAS NOT PERFORMED ANY ENGINEERING OR DESIGN SERVICES FOR THIS PROJECT, NOR HAS ADS INDEPENDENTLY VERIFIED THE INFORMATION SUPPLIED. THE INSTALLATION DETAILS PROVIDED HEREIN ARE GENERAL RECOMMENDATIONS AND ARE NOT SPECIFIC FOR THIS PROJECT. THE DESIGN ENGINEER SHALL REVIEW THESE DETAILS PRIOR TO CONSTRUCTION. IT IS THE DESIGN ENGINEERS RESPONSIBILITY TO ENSURE THE DETAILS PROVIDED HEREIN MEETS OR EXCEEDS THE APPLICABLE NATIONAL, STATE, OR LOCAL REQUIREMENTS AND TO ENSURE THAT THE DETAILS PROVIDED HEREIN ARE ACCEPTABLE FOR THIS PROJECT.

WATERTIGHT STRUCTURE CONNECTION TYPE 4 DETAIL

DRAWING NUMBER: STD–204D

ADS
ADVANCED DRAINAGE SYSTEMS, INC.
4640 TRUEMAN BLVD
HILLIARD, OHIO 43026

DRAWN BY:	CKS
DATE:	10/10/06
CK'D BY:	
SCALE:	NTS
SHEET	1 OF 1

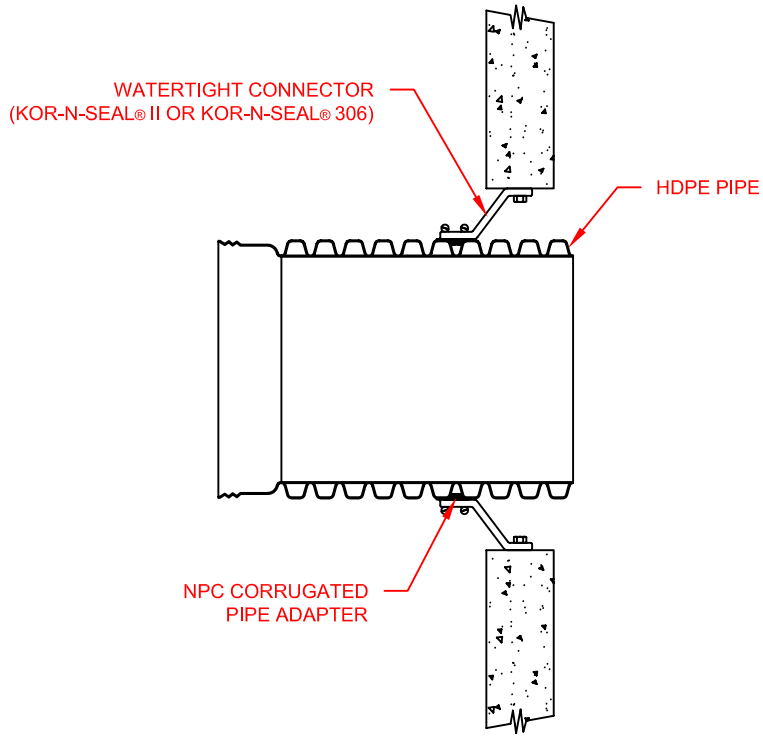

TYPE 5: KOR-N-SEAL (CORED HOLE OR PRE-CAST GASKET) W/ FIELD INSTALLED MANHOLE BOOT W/RUBBER CORRUGATED PIPE ADAPTER

SEE STANDARD DETAIL STD-201 AND TECHNICAL NOTE: 5.04 HDPE CONNECTIONS TO MANHOLES AND STRUCTURES FOR INSTALLATION RECOMMENDATIONS.

PIPE SIZE	PIPE OD (IN)		NPC ADAPTER *		KOR-N-SEAL® **	
(IN)	A-PROFILE	H-PROFILE	A-PROFILE	H-PROFILE	SERIES I OR II	SERIES 306
12	14.5	14.2	CGA-12	CGA-12	S106-20BWS	N/A
15	17.6	17.8	CGA-15	CGA-15	S106-20WS	S306-22
18	21.2	21.5	CGA-18	CGA-18H	S206-24L	S306-24L
24	27.8	28.4	CGA-24	CGA-24H	S206-32	S306-32
30	35.1	35.5	CGA-30	CGA-30H	S206-40	S306-40
36	41.1	41.4	CGA-36	CGA-36H	S206-44L	S306-44L
42	47.7	48.0	CGA-42	CGA-42H	S206-52L	S306-52L
48	53.6	54.0	CGA-48	CGA-48H	S206-58L	S306-58L
54	61.0	35.5	N/A	CGA-54H	S206-64L	N/A
60	66.3	67.3	CGA-60	CGA-60H	S206-72	N/A

* 12-24" DIAMETER ASSEMBLIES ARE RATED WATERTIGHT. 30-60" DIAMETER ASSEMBLIES SHALL BE RATER SOIL-TIGHT.

NOTES:

PERFORMANCE HIGHLY DEPENDENT ON INSTALLATION. CONTRACTOR MUST INSURE MANHOLE GASKET IS UNIFORMLY SEATED AROUND STRUCTURE ADAPTER. EXTRA PRECAUTIONS MUST BE TAKEN TO PREVENT DIFFERENTIAL SETTLEMENT BETWEEN THE PIPE AND MANHOLE.

** THIRD PARTY - CODES AS SUPPLIED BY MANUFACTURER

KOR-N-SEAL is a registered trademark of NPC, Inc. (www.npc.com)

REV.	DESCRIPTION	BY	MM/DD/YY	CHK'D
1	UPDATED DRAWING	TJR	02/20/07	CKS

© 2007 ADS, INC.

ADVANCED DRAINAGE SYSTEMS, INC. ("ADS") HAS PREPARED THIS DETAIL BASED ON INFORMATION PROVIDED TO ADS. THIS DRAWING IS INTENDED TO DEPICT THE COMPONENTS AS REQUESTED. ADS HAS NOT PERFORMED ANY ENGINEERING OR DESIGN SERVICES FOR THIS PROJECT, NOR HAS ADS INDEPENDENTLY VERIFIED THE INFORMATION SUPPLIED. THE INSTALLATION DETAILS PROVIDED HEREIN ARE GENERAL RECOMMENDATIONS AND ARE NOT SPECIFIC FOR THIS PROJECT. THE DESIGN ENGINEER SHALL REVIEW THESE DETAILS PRIOR TO CONSTRUCTION. IT IS THE DESIGN ENGINEERS RESPONSIBILITY TO ENSURE THE DETAILS PROVIDED HEREIN MEETS OR EXCEEDS THE APPLICABLE NATIONAL, STATE, OR LOCAL REQUIREMENTS AND TO ENSURE THAT THE DETAILS PROVIDED HEREIN ARE ACCEPTABLE FOR THIS PROJECT.

WATERTIGHT STRUCTURE CONNECTION TYPE 5 DETAIL

DRAWING NUMBER: STD–204E

ADS
ADVANCED DRAINAGE SYSTEMS, INC.
4640 TRUEMAN BLVD
HILLIARD, OHIO 43026

DRAWN BY:	CKS
DATE:	10/10/06
CK'D BY:	
SCALE:	NTS
SHEET	1 OF 1

Coir Logs

NEDIA ENTERPRISES, INC.

22187 Vantage Pointe Place
Ashburn, VA 20148

Tel: (888) 725-6999
Fax: (571) 223-0202

Technical Specifications for

NEDIA 12" KoirLog™ (ND Series)

Product Specification	Typical Value
Diameter	12 in (30 cm)
Unit Weight	5.0 lbs/ft (7.4 kg/m)
Core Density	7.0 lbs/cu.ft (112 kg/cu.m)
Wave Height	12 in (30 cm)
Water Velocity	8.0 ft/s (2.4m/s)

(1) **Inner Core** shall be 100% unsorted, well-cleaned, coir fiber uniformly distributed along the length of the log. The stuffed density of the coir fiber shall be a minimum of 7 lbs/cu.ft. (112 kg/cu.m.)

(2) **Outer netting** shall be constructed from 3 ply high strength coir twine or yarn. The netting shall have 2"x2" rhombic openings with hand-knotted junctions. The average breaking strength of the coir twine or yarn shall be a minimum of 90 lbs. Minimum diameter of the coir twine or yarn shall be 3/8 inch.

(3) **Length** of each log module shall be 20 ft (6.1 m) or 10 ft (3.05 m)

(4) **Production tolerance** for all the above parameters shall not exceed plus or minus 10%.

NEDIA ENTERPRISES, INC.

22187 Vantage Pointe Place
Ashburn, VA 20148

Tel: (888) 725-6999
Fax: (571) 223-0202

Technical Specifications for

12" KoirLog™ (HD Series)

Product Specification	Typical Value
Diameter	12 in (30 cm)
Unit Weight	7.0 lbs/ft (10.4 kg/m)
Core Density	9.0 lbs/cu.ft (145 kg/cu.m)
Wave Height	12 in (30 cm)
Water Velocity	8.0 ft/s (2.4m/s)

(3) Inner Core shall be 100% unsorted, well-cleaned, coir fiber uniformly distributed along the length of the log. The stuffed density of the coir fiber shall be a minimum of 9 lbs/cu.ft. (145 kg/cu.m.)

(4) Outer netting shall be constructed from a minimum of 3 ply high strength coir bristle twine or yarn. The netting shall have 2"x2" (50 mm x 50mm) rhombic openings with hand-knotted junctions. The average breaking strength of the coir twine or yarn shall be a minimum of 90 lbs (400 N). Minimum diameter of the coir twine or yarn shall be 3/8 inch.

(3) Length of each log module shall be 20 ft (6.1 m) or 10 ft (3.05 m)

(5) Production tolerance for all the above parameters shall not exceed plus or minus 10%.

Note: KoirLogs are also available in 7 lbs/cu.ft density with high strength coir outer netting (ND series) as well as with polypropylene outer netting (HDP series).

NEDIA ENTERPRISES, INC.

22187 Vantage Pointe Place
Ashburn, VA 20148

Tel: (888) 725-6999
Fax: (571) 223-0202

Technical Specifications for

NEDIA KoirLog™ 12 HDP

Product Name	Diameter	Dry Weight
KoirLog 12HDP	12 in (30 cm)	7.1 lbs/ft (10.5 kg/m)

(1) Inner Core shall be 100% unsorted, well-cleaned, coir fiber uniformly distributed along the length of the log. The stuffed density of the coir fiber shall be a minimum of 9 lbs/cu.ft. (144 kg/cu.m.)

(2) Outer netting shall be constructed from high strength synthetic (nylon or polypropylene) twine. The twine shall be 2 ply minimum. The netting shall have 2"x2" rhombic openings. The average breaking strength of the synthetic twine shall be a minimum of 225 lbs.

(3) Length of each log module shall be 20 ft (6.1 m) or 10 ft (3.05 m)

(4) Production tolerance for all the above parameters shall not exceed plus or minus 10%.

Nedia Enterprises, Inc.

The Natural Choice for
Erosion Control Products

About the Company
Bioengineering

KoirLog™ 12, 16 & 20
Typical Application
Installation Guidelines
Technical Specification
Photo Gallery

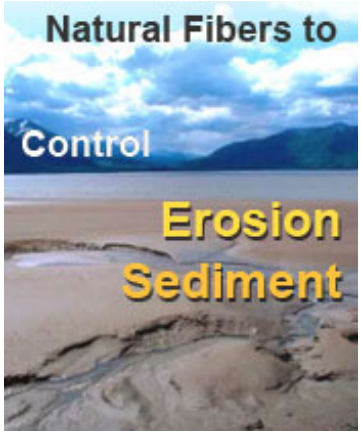

Nedia Enterprises offers a complete line of erosion control, sediment control, and bioengineering products made primarily from natural fibers. We provide innovative quality products and excellent service to our customers in the erosion control and bioengineering industry.

Search

Products - Coconut Fiber Logs - Installation Guidelines

Installation Guidelines for KoirLogs

Installation Guidelines

- Determine on site where the installation should begin and end. Usually installation begins downstream. Sediment and erosion control measures such as silt fence and sediment barriers should be in place of disturbances on work site. Prepare the site of installation by removing large rocks or other such obstructions. Re-grade slope, if necessary. Gradual slopes, flatter than 2:1 are preferred.

- Determine the mean water elevation. Mark the level on a stake driven into the substrate 1 to 2 feet off-shore. **KoirLogs** (fig. 1) should be 1/2 to 2/3 below mean water elevation for the survival of vegetation.

- KoirLogs must be level, installed along a horizontal contour and parallel to the stream bank. KoirLogs can be installed adjacent to the **shoreline** (fig. 2 & 3) or away from the **shoreline**(fig. 4 & 5) depending on the prevailing physical conditions.

- When KoirLogs are installed adjacent to the shoreline, drive pencil point hardwood stakes (2″ x 2″ x 36″) through at least 2 loops of the outer netting of the KoirLog on the waterside. Stakes can be spaced 3′ on center for medium flow conditions and 2′ apart on center for rapid flow conditions. KoirTwine or BioTwine can be used to tie the logs to the stakes. Stakes should be driven down so that the top of the stake is level with the top of the KoirLog. KoirLogs shall be placed along the stream banks at a height sufficient to protect the shore from flows or waves. Additional **KoirLogs**(fig. 3) may be stacked above the lower logs to protect the upper shore or stream bank.

- When KoirLogs are installed away from the shoreline, the area **behind** (fig. 5) the logs can be backfilled and covered with KoirMat to create an aquatic shelf. Alternatively, the **area** (fig. 4) behind the log can be stabilized using pre vegetated KoirBed. For off - shore applications, drive stakes 1 to 2 feet on center along both sides of the KoirLog in parallel rows. Lacing across the stakes is a good method to hold the KoirLogs in place. Weave lacing back and forth across the KoirLog and attach the lacing to each stake using knots, notches, staples or nails.

- Adjacent KoirLogs must be laced together, end to end, tightly and securely with KoirTwine or **BioTwine** (fig. 6)

- Ends of the KoirLog not abutting another KoirLog must be bent towards the shore and dug into the bank to prevent the water from flowing behind the KoirLogs causing them to be pulled out.

- Plant the KoirLog with appropriate native plant species after the KoirLog has been submerged in water for a short period of time. Insert fingers or a planting iron through the outer netting to create a hole for the plant plug. Gently push the plug deep into the KoirLog. Recommended spacing of the plant plugs is 4″ to 12″ along two lines in a staggered pattern.

- Cover the root ball by wrapping coir fiber around the base of the stem. Check to ensure that the plants have been firmly installed in the substrate. Plants and materials have to be monitored approximately 3-4 weeks after installation to ensure the success and survival of the plants and the integrity of the materials.

Pattern Guide

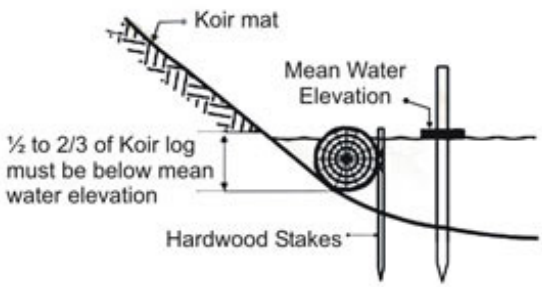

Fig. 1 - Site Preparation

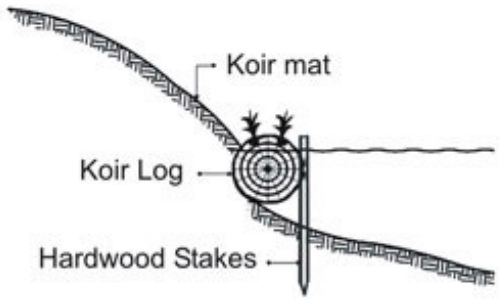

Fig. 2 - KoirLog installed along the shoreline

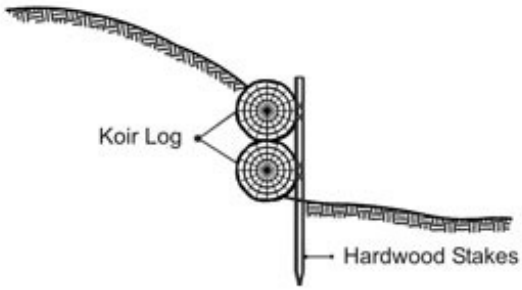

Fig. 3 - Stacked KoirLogs

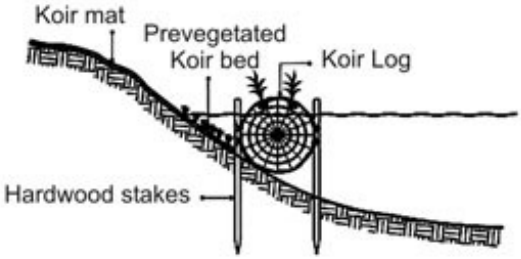

Fig. 4 - KoirLog installed off-shore

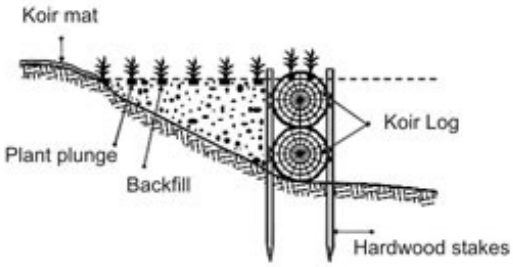

Fig. 5 -Stacked KoirLogs to create aquatic shelf

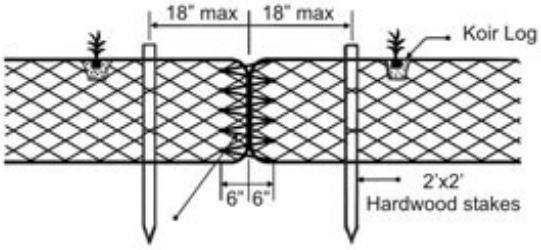

Fig. 6 -KoirLog splice detail

Coconut Fiber
Jute Fiber

© 2007 Nedia Enterprises Inc. All rights reserved.
Site maintained by iFactor Solutions.
Unauthorized use of images and content is strictly prohibited.

LAWRENCE LIVERMORE
NATIONAL LABORATORY
University of California • Livermore, California • 94550